DIRECT SEMI-BLIND DESIGN OF SERIAL LINEAR EQUALIZERS FOR DOUBLY-SELECTIVE CHANNELS

Geert Leus [1], *Imad Barhumi* [2], *Olivier Rousseaux* [2], *Marc Moonen* [2]

[1] Delft University of Technology, Delft, The Netherlands

[2] Katholieke Universiteit Leuven, Leuven, Belgium

The Problem

Application Example

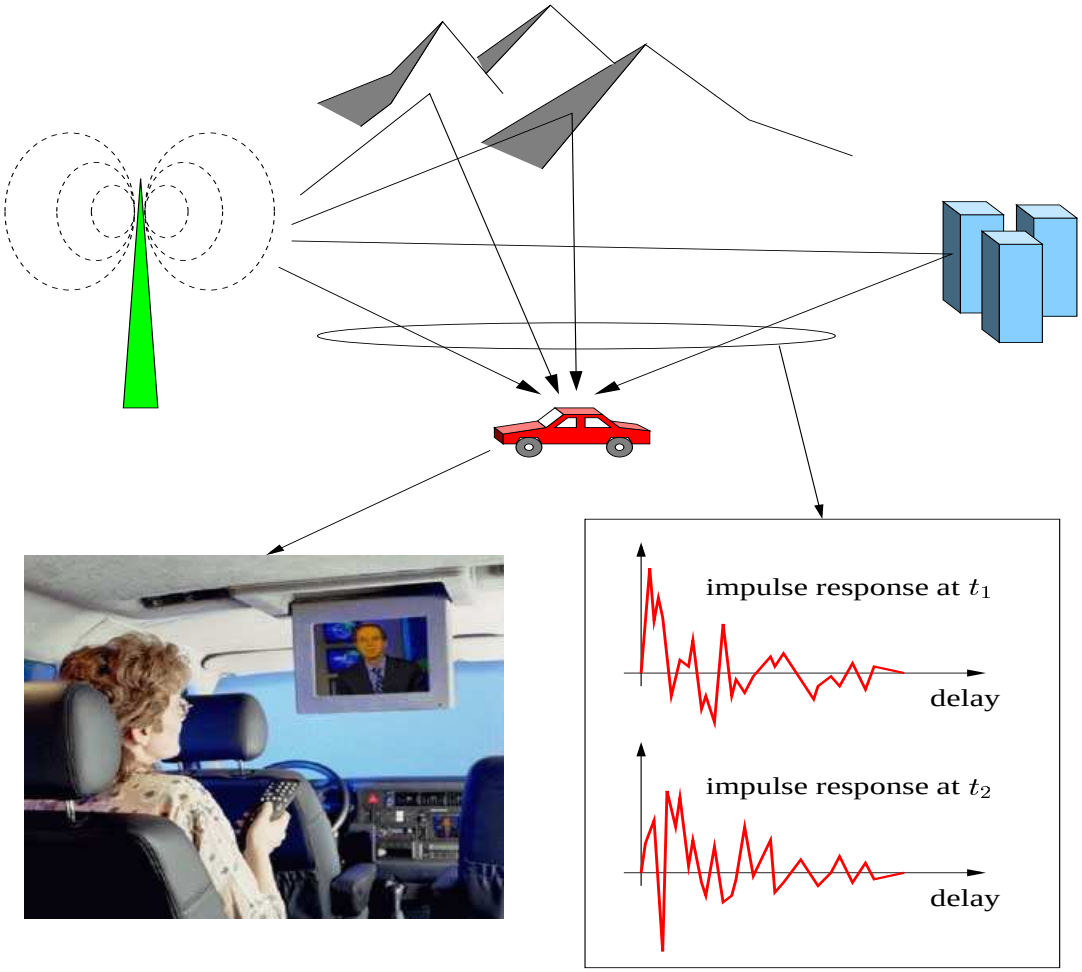

System Model

Doubly-Selective Channels

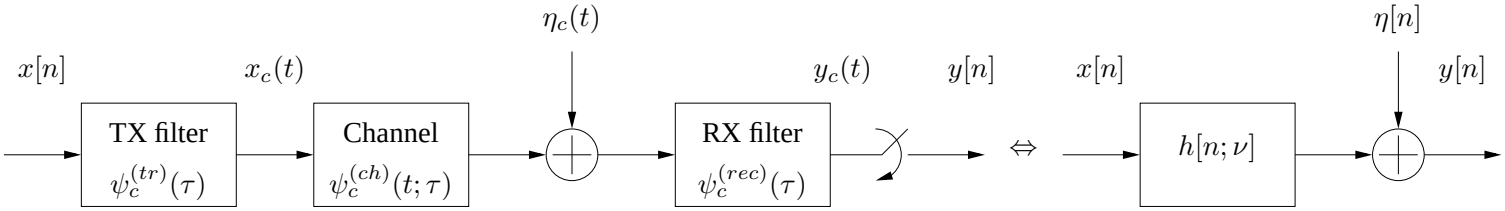

- input-output relation:

$$y[n] = \sum_{\nu=-\infty}^{\infty} h[n;\nu]x[n-\nu] + \eta[n]$$

- $h[n;\nu]$ depends on many parameters:
  - path delays
  - path gains
  - path frequency offsets
- we try to circumvent channel estimation by direct equalization

Equalization

Linear Serial Equalizer

- input-output relation:

$$\hat{x}[n-d] = f[n;\nu]y[n-\nu]$$

- we parametrize the equalizer $f[n;\nu]$ using the basis expansion model (BEM):

$$f[n;\nu] = \sum_{l'=0}^{L'} \delta[\nu - l'] \sum_{q'=-Q'/2}^{Q'/2} f_{q',l'} e^{j2\pi q' n/K}$$

$$\hat{x}[n-d] = \sum_{l'=0}^{L'} \sum_{q'=-Q'/2}^{Q'/2} f_{q',l'} e^{j2\pi q' n/K} y[n-l']$$

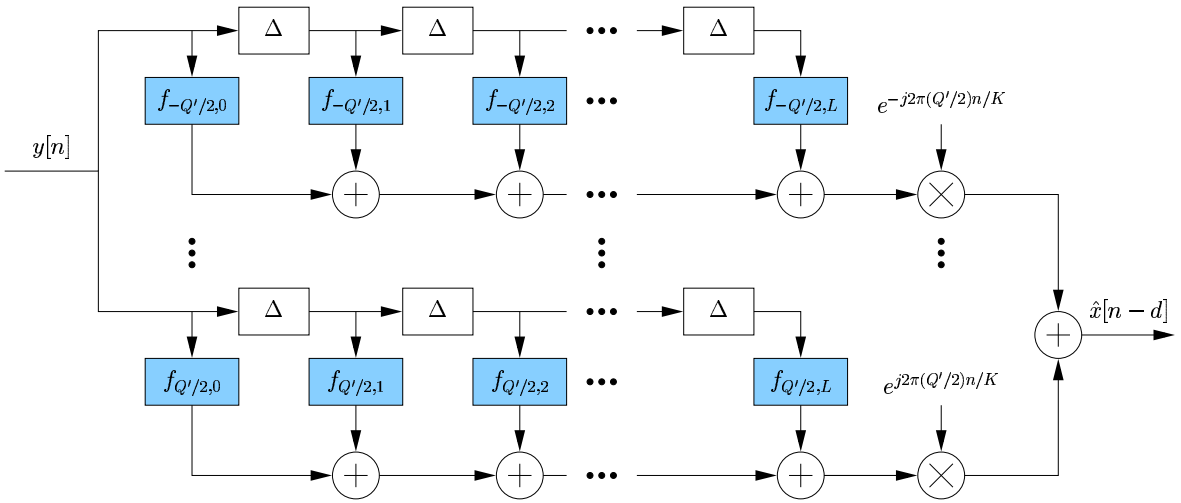

Equalization

BEM Equalizer

- number of parameters is reduced to $(L'+1)(Q'+1)$
- zero-forcing equalizer exists if
  - channel is a BEM
    - holds in a window that is smaller than the period of the BEM
    - no assumptions on the channel statistics required
  - channel has at least two outputs
    - spatial oversampling
    - temporal oversampling
    - polarization diversity

Direct Equalization

Mutually Referenced Equalizers (MRE)

- equalizer for the pth frequency-shift and kth time-shift:

$$\hat{x}[n-d-k]e^{j2\pi pn/K} = \sum_{l'=0}^{L'} \sum_{q'=-Q'/2}^{Q'/2} f_{q',l'}^{(p,k)} e^{j2\pi q' n/K} y[n-l']$$

$$\hat{x}[n] = \sum_{l'=0}^{L'} \sum_{q'=-Q'/2}^{Q'/2} f_{q',l'}^{(p,k)} e^{j2\pi (q'-p)(n+d+k)/K} y[n+d+k-l']$$

- the output of one equalizer can be used to train the other
- zero-forcing equalizer can be found in this *blind* way if
  - channel is a BEM
  - channel has at least two outputs
  - noiseless receiver
  - all frequency- and time-shifts are taken into account

Direct Equalization

Training to Improve Robustness

- assume the symbols $x[n_i]$ are training symbols
- we then obtain the additional equations

$$x[n_i] = \sum_{l'=0}^{L'} \sum_{q'=-Q'/2}^{Q'/2} f_{q',l'}^{(p,k)} e^{j2\pi(q'-p)(n_i+d+k)/K} y[n_i + d + k - l']$$

- robustness is introduced in case
  - noisy receiver
  - not all possible frequency- and time-shifts are taken into account
- after finding all equalizers we pick the one with $p = k = 0$
- the purely training-based method only exploits the above equations for $p = k = 0$

Simulation

Simulation Setup

- 5 equal-power clusters with delays 0, $T/2$, T, $3T/2$, $2T$
- each cluster is modeled by Jakes' model with Doppler spread $1/(400T)$
- rectangular transmit and receive fi lters
- spatial and temporal oversampling factor 2 (hence, we have 4 outputs)
- window size $200T$
- PSAM training: 1 out of every 4 data symbols is known
- for the equalizer: $Q' = 2$, $L' = 3$, $K = 400$
- for the semi-blind method we use 3 frequency-shifts and 3 time-shifts

Simulation

Results

