ICC 20-24 June 2004 - Paris

Equalization for OFDM over Doubly-Selective Channels

Imad Barhumi, Geert Leus, and Marc Moonen
K.U.Leuven-ESAT/SCD-SISTA
T.U.Delft-Faculty of Electrical Engineering

Outline

- Introduction
- Motivation
- Wireless Communication Channels
- System Model
- Equalization for OFDM over DS:
  - Time-Domain approach
  - Frequency-Domain (Per-Tone) approach
- Simulation Results
- Conclusions

Introduction

Introduction

- OFDM possesses the following key advantages

Introduction

- OFDM possesses the following key advantages
  - High data rates
  - Robust against multipath fading channels
  - Simple equalization techniques

Introduction

- OFDM possesses the following key advantages
  - High data rates
  - Robust against multipath fading channels
  - Simple equalization techniques
- Pending on:

Introduction

- OFDM possesses the following key advantages
  - High data rates
  - Robust against multipath fading channels
  - Simple equalization techniques
- Pending on:
  - CP length is greater than channel order
  - Frequency selective channels (or slowly time varying)

Introduction

- OFDM possesses the following key advantages
  - High data rates
  - Robust against multipath fading channels
  - Simple equalization techniques
- Pending on:
  - CP length is greater than channel order
  - Frequency selective channels (or slowly time varying)
- Result:

Introduction

- OFDM possesses the following key advantages
  - High data rates
  - Robust against multipath fading channels
  - Simple equalization techniques
- Pending on:
  - CP length is greater than channel order
  - Frequency selective channels (or slowly time varying)
- Result:
  - Orthogonality is preserved
  - NO ICI is present
  - 1-tap FEQ

Motivation

- OFDM over Doubly-Selective Channels (rapidly-time varying)
- The CP is possibly less than the channel order
  - Orthogonality between subcarriers is destroyed
  - ICI/IBI is present
  - The simple 1-tap FEQ is not sufficient
- Complex equalization is required
  - To restore orthogonality
  - reduce or completely eliminate ICI

Fading in Wireless Communications

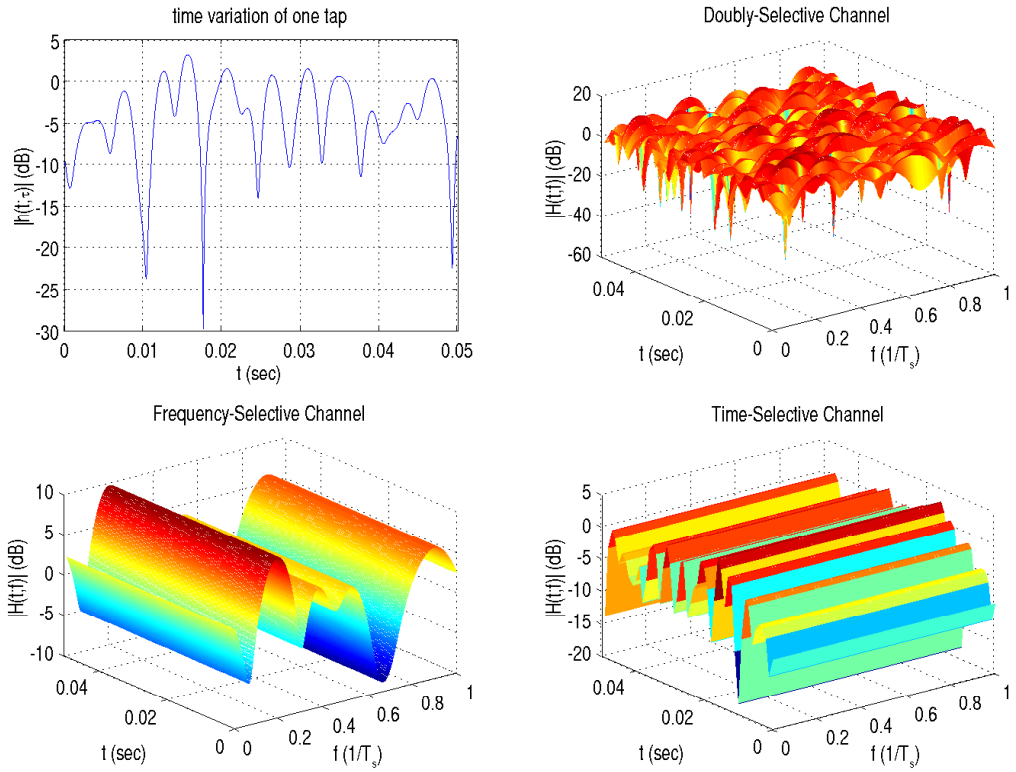

- Types of fading depend on:
  - Symbol period vs. delay spread
  - BW vs. Doppler spread
  - Carrier frequency

Basis Expansion Model (BEM)

- BEM is an alternative model with fewer parameters.
- The time variety of each tap is captured by Q TV complex exponentials.

$$h(n;\nu) = \sum_{l=0}^{L} \delta_{\nu-l} \sum_{q=-Q/2}^{Q/2} h_{q,l} e^{j\omega_q n/K}$$

- K is the BEM resolution, (multiple of the block size)
- $Q = 2\lceil f_d K T_s \rceil$

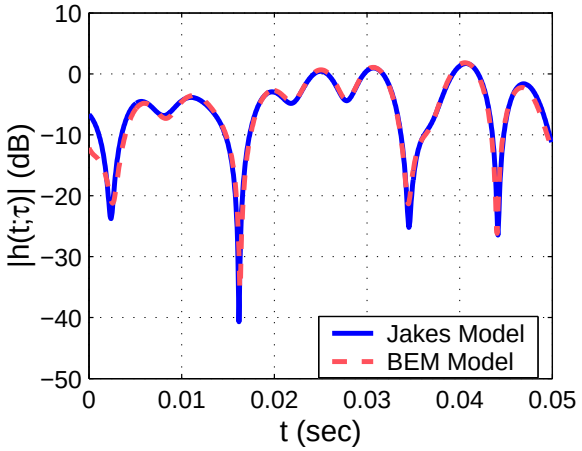

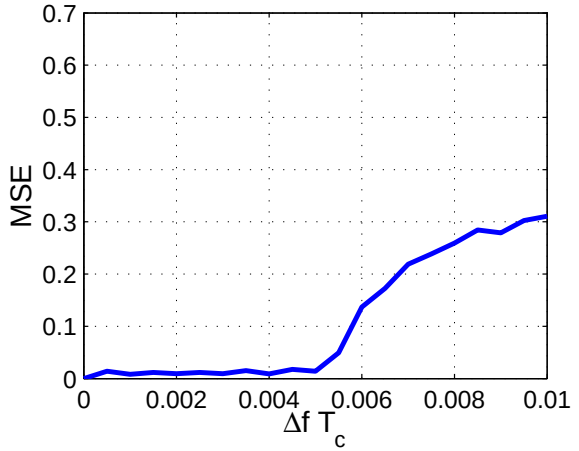

System Model

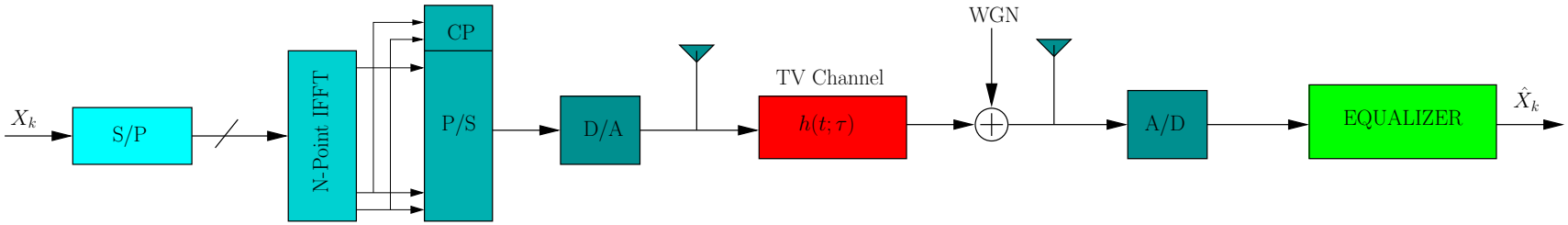

- Single-Input Multiple-Output (SIMO)
- Doubly-Selective Channel
  - Max. Doppler frequency f_{max}
  - Max. Delay spread τ_{max}
  - Jakes' Model Channel, parameterized using the BEM
  - The channel BEM coeff. are known or can be estimated
- Equalization:
  - Time-Domain Equalizer
  - Frequency-Domain Equalizer

Equalization for OFDM over Doubly-Selective Channels (TEQ)

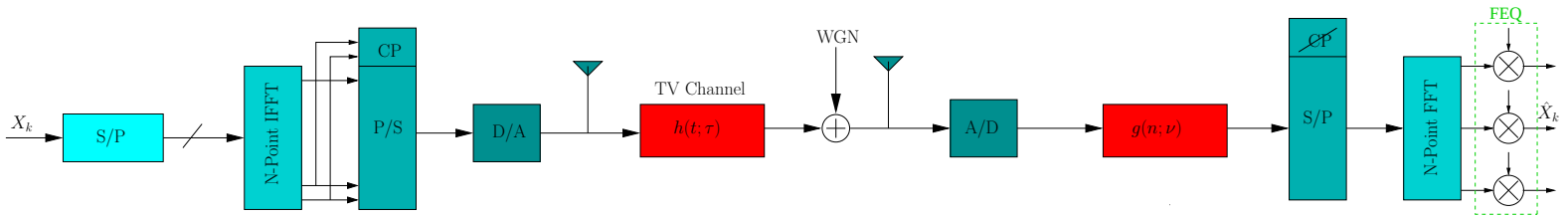

Equalization for OFDM over Doubly-Selective Channels (TEQ)

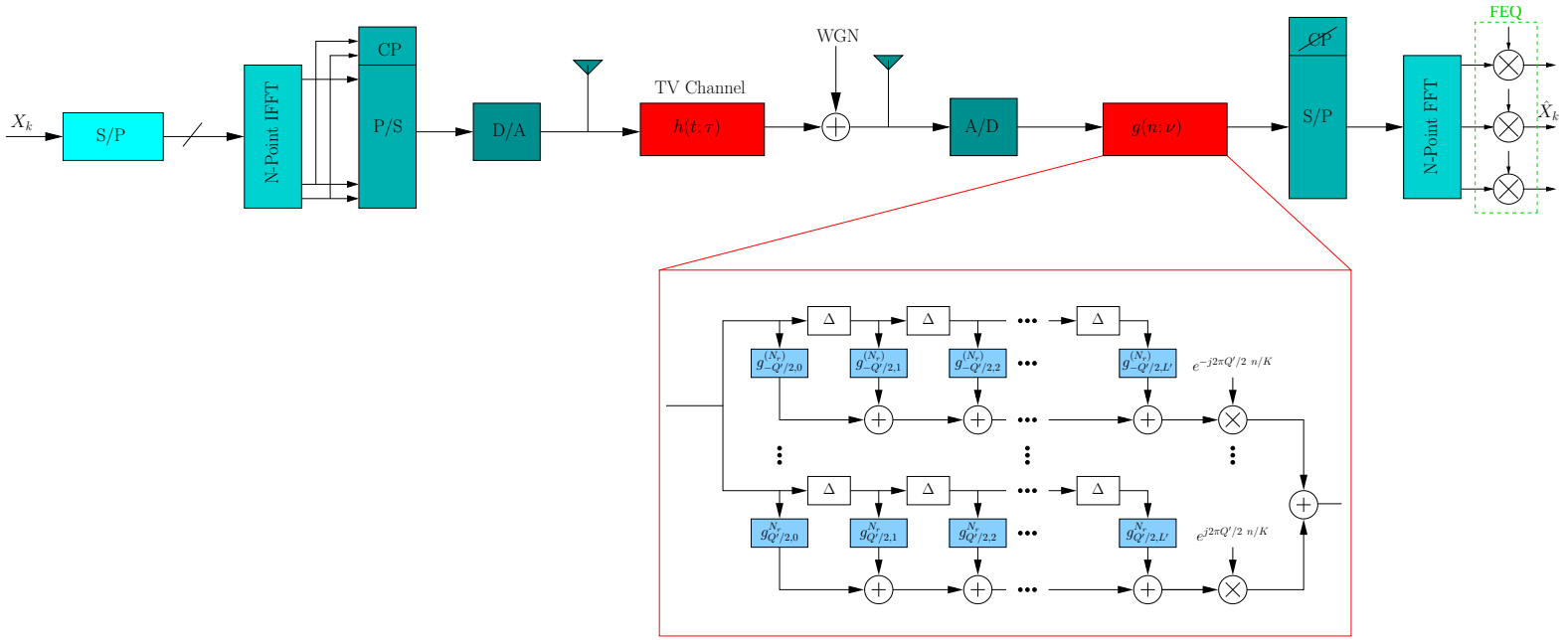

Equalization for OFDM over Doubly-Selective Channels (TEQ)

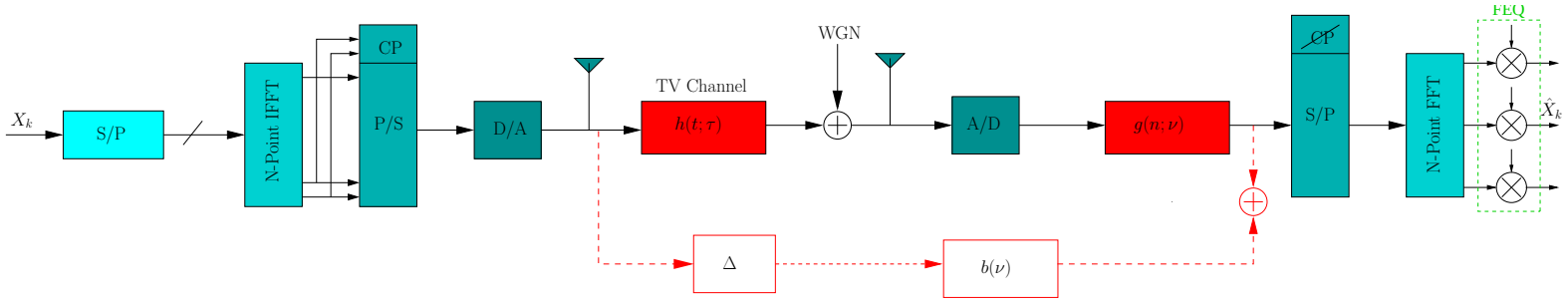

Equalization for OFDM over Doubly-Selective Channels (TEQ)

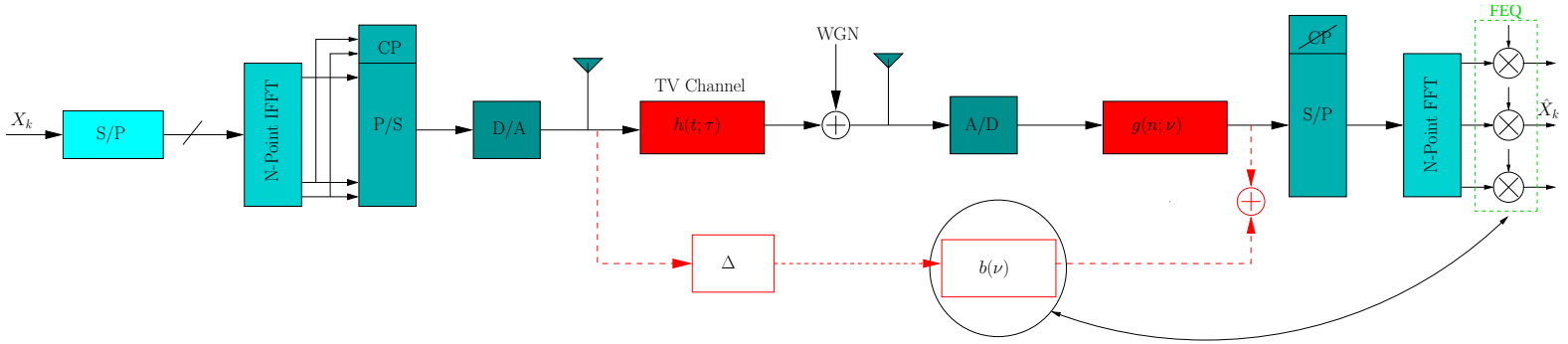

Equalization for OFDM over DS Channels (TEQ)

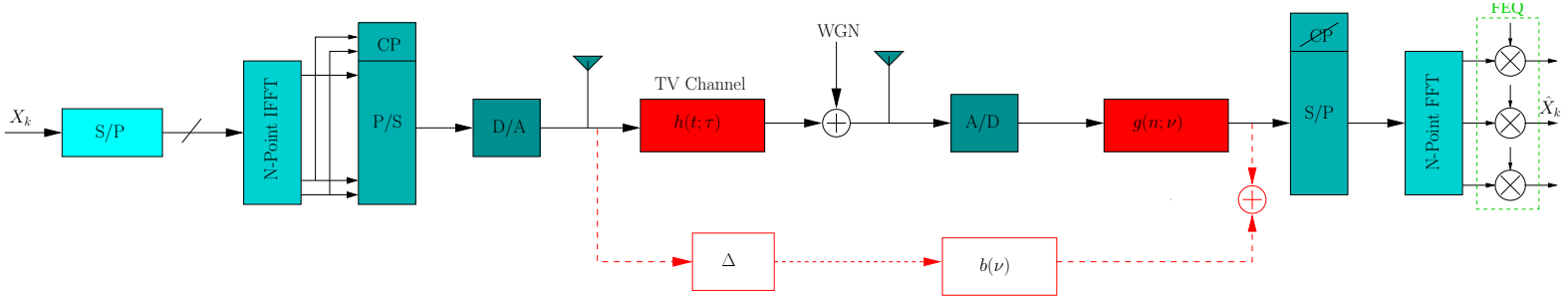

- TEQ: to convert the doubly-selective channel into purely frequency-selective
- and/or to the shorten the channel to fit within the CP
- Constraints are applied to avoid the trivial solution
- 1-tap FEQ is still required
- Optimize the performance on all subcarriers in a joint fashion
- Sensitive to the decision delay

Equalization for OFDM over DS Channels (FEQ)

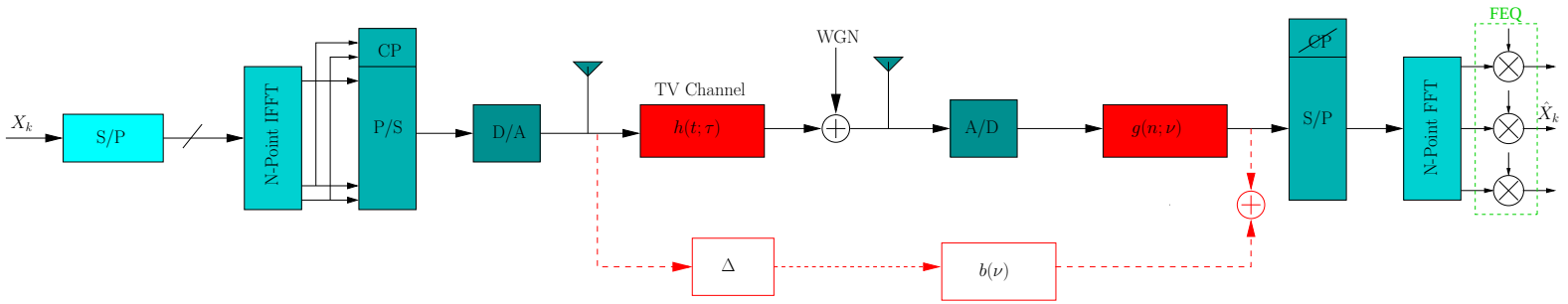

Equalization for OFDM over DS Channels (FEQ)

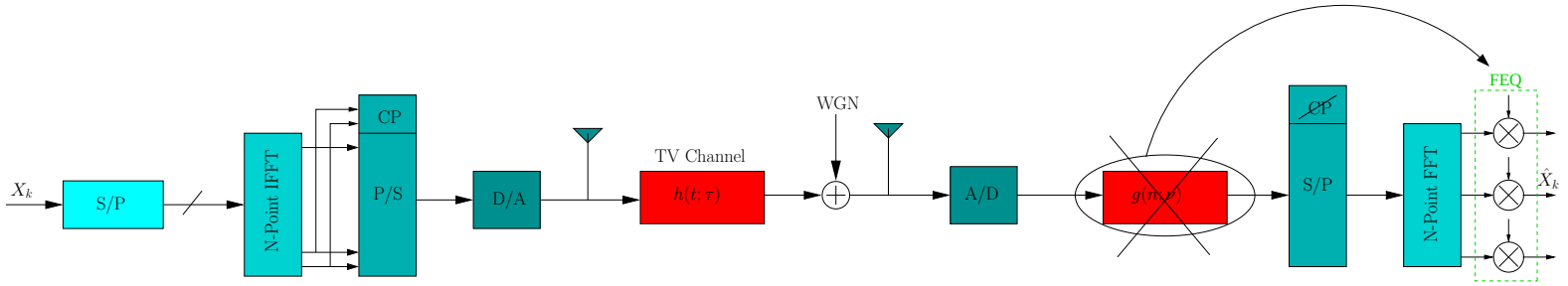

Equalization for OFDM over DS Channels (FEQ)

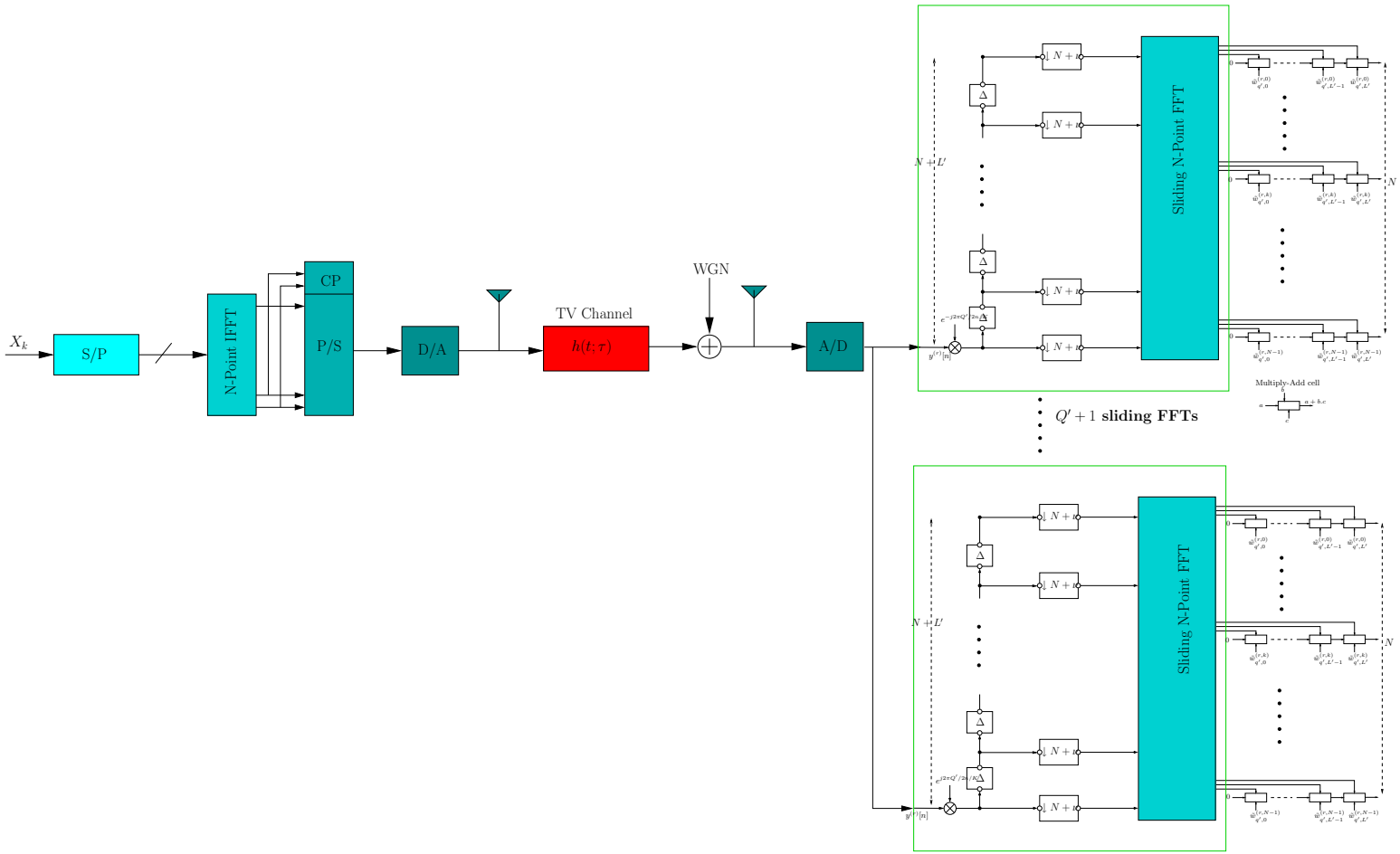

Equalization for OFDM over DS Channels (FEQ)

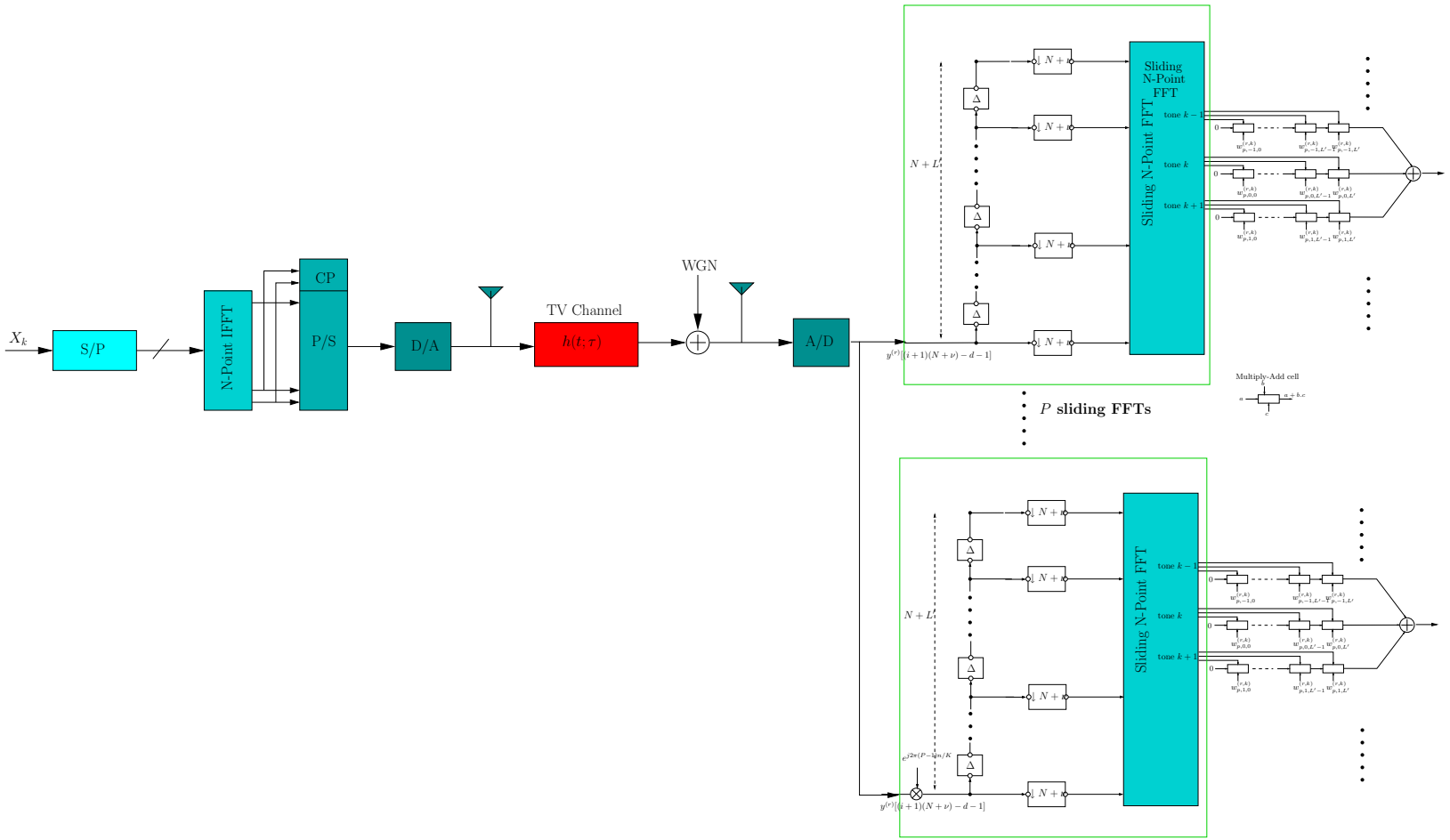

Equalization for OFDM over DS Channels (FEQ)

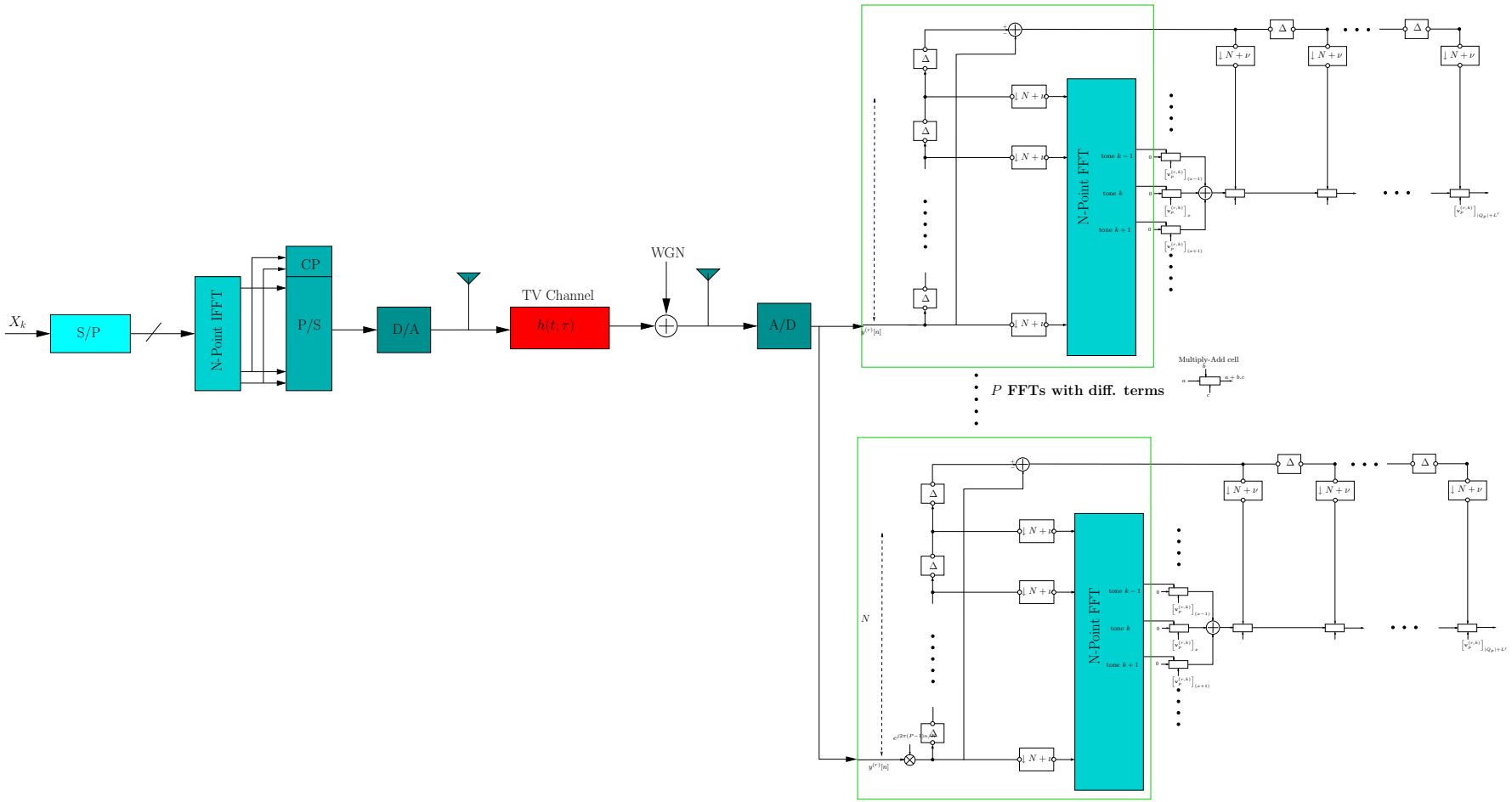

Complexity

- Implementation complexity comparison:

	MA/tone/rx	FFT/rx
TEQ	$(Q'+1)(L'+1)$	1
PTEQ 1	$(Q'+1)(L'+1)$	$Q'+1$
PTEQ 2	$(Q'+1)(L'+1)$	P
PTEQ 3	$P(L'+1)+Q'+1$	P

- Design complexity of the PTEQ is higher than the design complexity of the TEQ

Simulations

- System parameters
  - Number of subcarriers $N = 128$;
  - Symbol period $T = 25\mu s$;
  - Max. Doppler-spread $f_{max} = 100Hz$
  - Max. Delay-spread $\tau_{max} = 150\mu s$
  - BEM resolution $K = PN$, $P = 1, 2$
  - Number of basis functions $Q = 2\lceil f_{max}KT \rceil = 2, 4$;
  - Channel order $L = \lceil \tau_{max}/T \rceil = 6$.
  - Jakes' Model Channel taps correlated in time ($r_{hh} = J_0(2\pi f_{max}\tau)$)
  - QPSK signaling
- Performance is measured in terms BER vs. SNR
- Evaluate TEQ and PTEQ

Results $N_r = 1$

- PTEQ, $Q' = 10$
- TEQ, $Q' = 14$, $L' = 14$
- $\nu = L = 6$

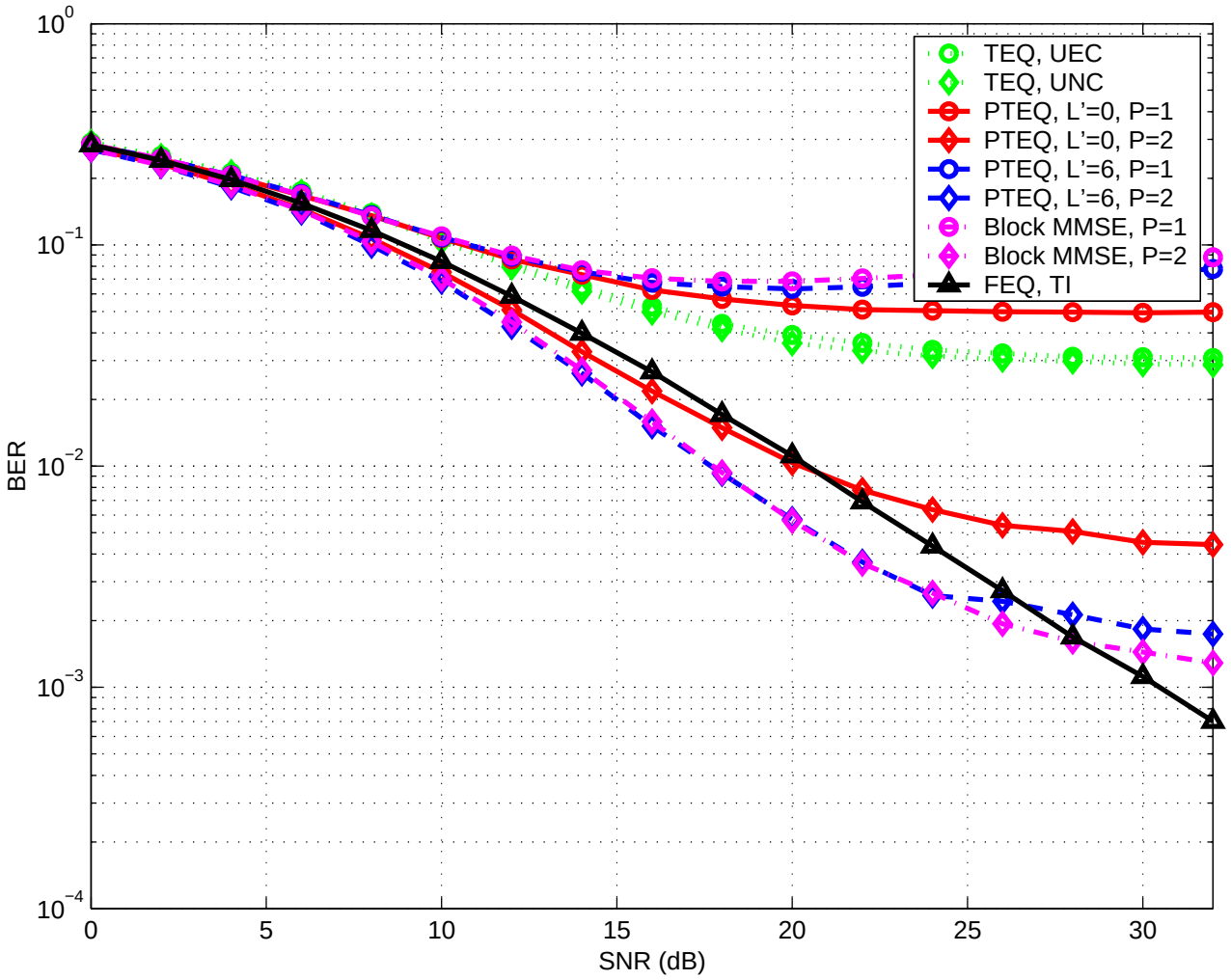

Results $N_r = 2$

- PTEQ and TEQ: $Q' = 8$, $L' = 8$
- $\nu = 3$

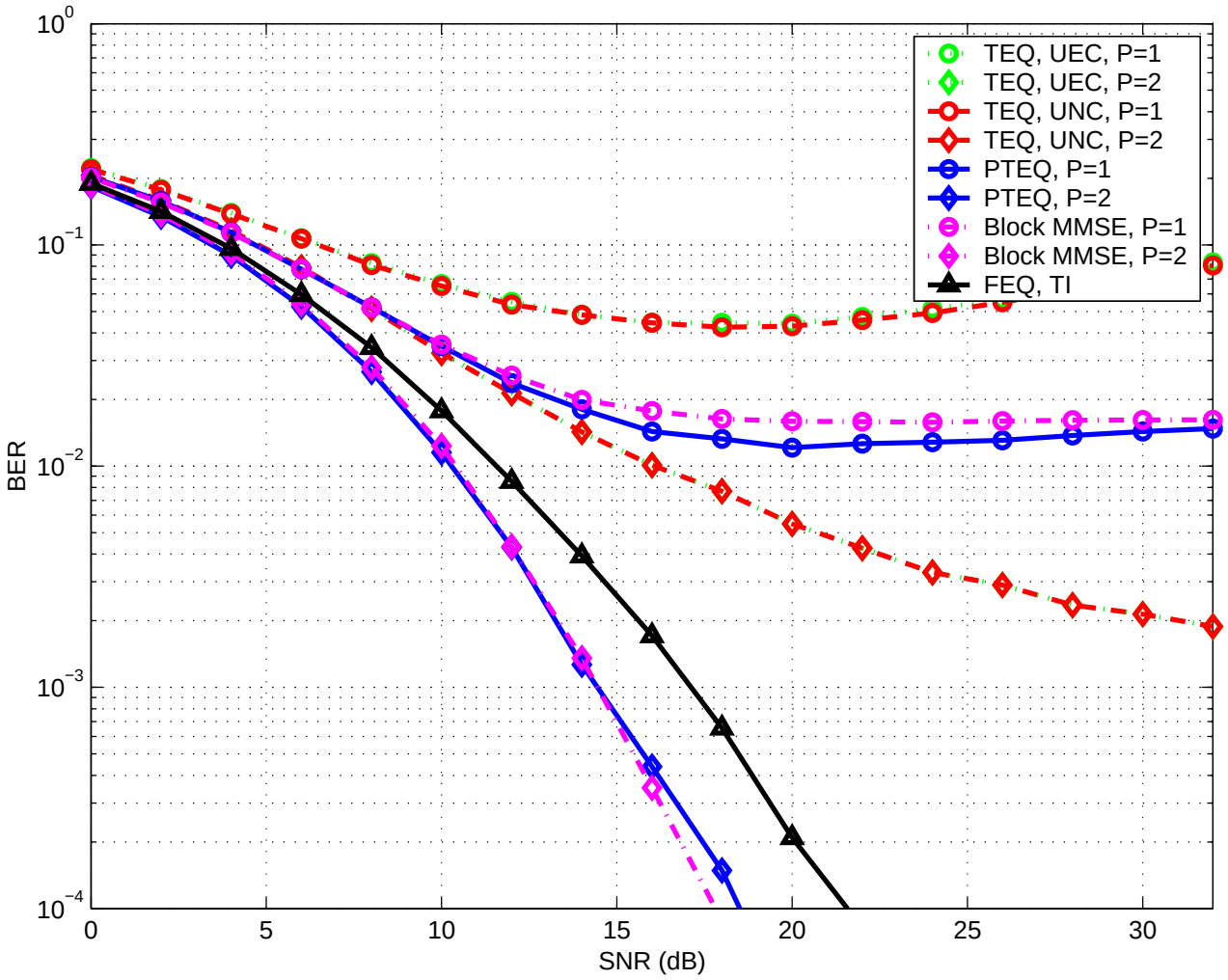

Results

- PTEQ with true channel

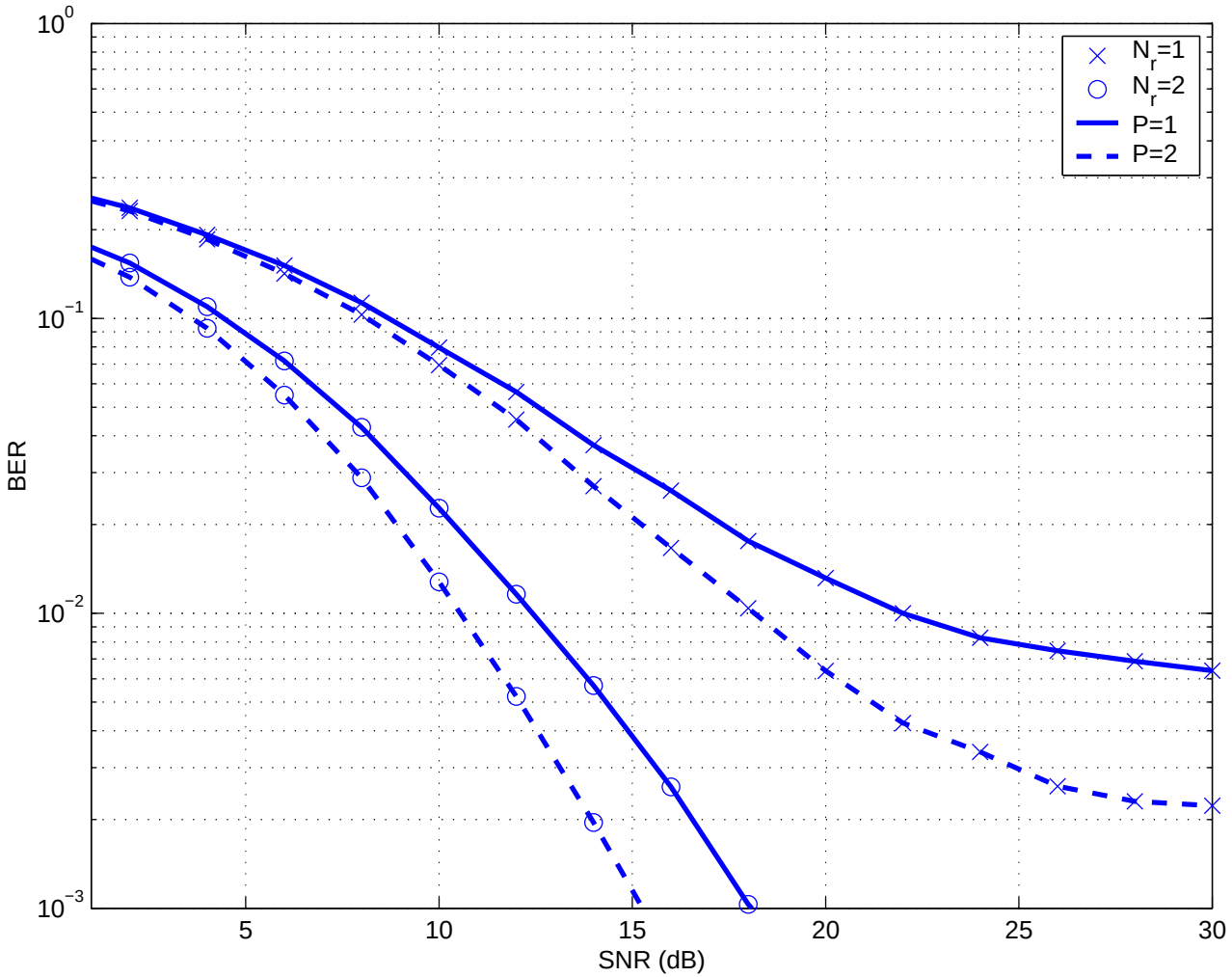

Conclusions

- We propose Time-Domain and Frequency-Domain Per-Tone equalization techniques for OFDM over DS channels
- PTEQ significantly outperforms the TEQ
  - Frequency-domain oversampling factor $P > 1$
  - Combine adjacent subcarrier to cancel ICI on a specific subcarreir
  - For the case $L = \nu$ approaches(outperforms) the MMSE equalizer of the TI channel
  - The proposed PTEQ unifies and extends many existing frequency-domain equalization techniques

Questions ☺