FREQUENCY-DOMAIN IQ-IMBALANCE AND CARRIER FREQUENCY OFFSET COMPENSATION FOR OFDM OVER DOUBLY SELECTIVE CHANNELS

Imad Barhumi, and Marc Moonen

Departement Elektrotechniek-ESAT, Katholieke Universiteit Leuven
Kasteelpark Arenberg 10, 3001, Leuven (Heverlee), Belgium
phone: +32 16 32 1803, fax: +32 16 32 1970, email: {imad.barhumi,marc.moonen}@esat.kuleuven.be

ABSTRACT

In this paper we propose a frequency-domain IQ-imbalance and carrier frequency offset (CFO) compensation and equalization for OFDM transmission over doubly selective channels. IQ-imbalance and CFO arise due to imperfections in the receiver and/or transmitter analog front-end, whereas user mobility and CFO give rise to channel time-variation. In addition to IQ-imbalance and the channel time-variation, the cyclic prefix (CP) length may be shorter than the channel impulse response length, which in turn gives rise to inter-block interference (IBI). While IQ-imbalance results in a mirroring effect, the channel time-variation results in inter-carrier interference (ICI). The frequency-domain equalizer is proposed to compensate for the IQ-imbalance taking into account ICI and IBI. The frequency-domain equalizer is obtained by transferring a time-domain equalizer to the frequency-domain resulting in the so-called per-tone equalizer (PTEQ).

1. INTRODUCTION

Orthogonal frequency division multiplexing (OFDM) has been adopted for digital audio and video broadcasting [1] and chosen by the IEEE 802.11 standard [2] as well as by the HIPERLAN-2 standard [3] for wireless local area networks (WLAN). This is due to its robustness against multi-path fading channels and its simple implementation. But OFDM is sensitive to analog front-end imperfections; mainly the amplitude- and phase- imbalances (IQ-imbalance) and the carrier frequency offset (CFO). In OFDM a cyclic prefix (CP) with a length equal to or longer than the channel delay spread is required to maintain orthogonality between sub-carriers. This is depending on the fact that ideal conditions are satisfied such as: no IQ-imbalance is present, zero CFO, and the channel is time-invariant (TI) over the OFDM block period. In practice it is difficult to satisfy all of these conditions. On the one hand, IQ-imbalance and CFO are present due to the analog front end imperfections, in particular when low complexity low cost receivers/transmitter are sought. On the other hand, the channel time-variation arises due to user mobility and CFO.

Different approaches have been proposed to overcome the analog front-end problems for OFDM transmission. In [4] a training based-technique for CFO estimation is proposed assuming perfect IQ-balance. A maximum likelihood (ML) CFO estimation is proposed in [5], also assuming perfect IQ-balance. The IQ-imbalance only problem is treated in [6, 7, 8] assuming zero CFO. Joint compensation of IQ-imbalance and CFO is treated in [9, 10]. In [9] it is assumed that the CFO is corrected based on perfect knowledge of the IQ-imbalance parameters, and the IQ-imbalance parameters can be estimated correctly in the presence of CFO. The assumption here is valid only for small CFO and small IQ-imbalance parameters, and so these algorithms are unable to achieve the desired accuracy for moderate to large IQ-imbalance parameters and large CFO values. In [10], nulled sub-carriers are used to estimate the CFO by maximizing the energy on the designated sub-carrier and its image. In an earlier work [11] the authors proposed frequency-domain IQ-imbalance and CFO compensation for OFDM transmission over time-invariant channels. There the CP-length was also assumed to be shorter than the channel impulse response length. *However, in the above mentioned works, the channel is assumed to be TI, and the CP length is consistently assumed to be longer than or equal to the channel impulse response length.*

In this paper we propose a frequency-domain per-tone equalizer (PTEQ) to equalize the channel and compensate for the IQ-imbalance. The channel is assumed to be time-varying due to user mobility and/or CFO, and the CP-length may be shorter than the channel impulse response length. The PTEQ is obtained by transferring a time-domain equalizer to the frequency-domain. The resulting PTEQ combines adjacent sub-carriers and their mirrors to combat the effect of ICI/IBI and to compensate for IQ-imbalance.

This paper is organized as follows. In Section 2, we introduce the system model. In Section 3, the per-tone equalizer is proposed. Our simulations are introduced in Section 4. Finally, our conclusions are drawn in Section 5.

Notation: We use upper (lower) bold face letters to denote matrices (column vectors). Superscripts *, ^{T}, and ^{H} represent conjugate, transpose, and Hermitian, respectively. We denote the expectation as $\mathscr{E}\{\cdot\}$ and the Kronecker product as $\otimes$. We denote the $N \times N$ identity matrix as $\mathbf{I}_N$, the $M \times N$ all-zero matrix as $\mathbf{0}_{M\times N}$. The kth element of vector $\mathbf{x}$ is denoted by $[\mathbf{x}]_k$. Finally, $\mathrm{diag}\{\mathbf{x}\}$ denotes the diagonal matrix with vector $\mathbf{x}$ on the diagonal.

2. SYSTEM MODEL

We consider an OFDM transmission over a time-varying frequency-selective channel. We assume a single-input single-output (SISO) system, but the results can be easily extended to single-input multiple-output (SIMO) or multiple-input multiple-output (MIMO) systems. At the transmitter the information-bearing symbols are parsed into blocks of N frequency-domain QAM symbols. Each block is then transformed to the time-domain by the inverse discrete Fourier transform (IDFT). A cyclic prefix (CP) of length ν is added to the head of each block. The time-domain blocks are then serially transmitted over the time-varying channel. When no IQ-imbalance is present, the discrete time-domain baseband equivalent description of the received signal at time index n is given by:

$$y[n] = \sum_{l=0}^{L} g[n;l]x[n-l] + v[n],$$

where $g[n;\theta]$ is the discrete time equivalent baseband representation of the time-varying frequency-selective channel taking into account

This research work was carried out at the ESAT laboratory of the Katholieke Universiteit Leuven, in the frame of Belgian Programme on Interuniversity Attraction Poles, initiated by the Belgian Federal Science Policy Office IUAP P5/11 ('Mobile multimedia communication systems and networks'). The scientific responsibility is assumed by its authors.

the multi-path physical channel and the transmitter and receiver pulse shaping filters as well as the effect of CFO (viewed as part of the channel time-variation). L is the channel order $L = \lfloor \tau_{\max}/T \rfloor + 1$ with $\tau_{\max}$ the channel maximum delay spread. $v[n]$ is the discrete time additive white noise (AWN), and $x[n]$ is the discrete time-domain sequence transmitted at a rate of $1/T$ symbols per second. Assuming $S_k[i]$ is the QAM symbol transmitted on the kth sub-carrier of the ith OFDM block, $x[n]$ can be written as:

$$x[n] = \frac{1}{\sqrt{N}} \sum_{k=0}^{N-1} S_k[i] e^{j2\pi(m-v)k/N},$$

where $i = \lfloor n/(N+v) \rfloor$ and $m = n - i(N+v)$. Note that this description includes the transmission of a CP of length v.

In the presence of IQ-imbalance, namely an amplitude-imbalance of Δa and phase-imbalance of $\Delta\phi$, the baseband equivalent received sequence at time index n is given by:

$$r[n] = \alpha y[n] + \beta y^*[n]. \tag{1}$$

where the parameters α and β are given by [12]:

$$\alpha = \cos(\Delta\phi) + j\Delta a \sin(\Delta\phi)$$
$$\beta = \Delta a \cos(\Delta\phi) - j\sin(\Delta\phi).$$

3. PER-TONE EQUALIZER

In general a per-tone equalizer (PTEQ) is obtained by transferring a time-domain equalizer (TEQ) to the frequency-domain. For the case of IQ-imbalance, the conventional TEQ is not enough to compensate for IQ-imbalance and reduce or eliminate IBI/ICI. For this purpose, two TEQs are applied, where one is used to filter the received sequence and the other one is used to filter a conjugated version of the received sequence. The purpose of the TEQs is to compensate for IQ-imbalance, equalize the time-varying channel and possibly eliminate IBI. In other words, the purpose of the TEQs is to shorten the time-varying channel impulse response length to fit within the CP-length, eliminate the channel time-variation and finally compensate for the mirroring effect induced by the IQ-imbalance. Assuming the time-varying TEQs $w_1[n;\theta]$ and $w_2[n;\theta]$ are applied to the received sequence in the fashion described above, the output of the TEQ subject to some decision delay d can be written as:

$$z[n-d] = \sum_{l'=0}^{L'} w_1^*[n;l'] r[n-l'] + \sum_{l'=0}^{L'} w_2^*[n;l'] r^*[n-l'], \tag{2}$$

where L' is the order of the time-varying TEQs. It was shown in [13, 14] that modeling the TEQ using the basis expansion model (BEM) is an efficient way to tackle the problem of IBI/ICI for OFDM systems. Using the BEM to model $w_1[n;l']$ and $w_2[n;l']$, the BEM equivalent of $w_1[n;l']$ and $w_2[n;l']$ can be written as:

$$w_a[n;l'] = \sum_{q'=-Q'}^{Q'} w_{a,q',l'}[i] e^{-j2\pi q' n/K}, \text{ for } a = 1,2, \tag{3}$$

where $2Q'+1$ is the number of basis functions, K is the BEM resolution of the time-varying TEQs taken as integer multiple of the block size $K = PN$, where P is an integer ≥ 1. $w_{a,q',l'}$ is the q'th basis of the l'th tap of the ath TEQ, which is kept fixed over a window length of $N+L'$, and may change from window to window independently. Substituting (3) in (2), and by using a block level formulation, we arrive at

$$\mathbf{z}[i] = \sum_{q'=-Q'}^{Q'} \mathbf{D}_{q'}[i] \mathbf{W}_{1,q'}^H[i] \mathbf{r}[i] + \sum_{q'=-Q'}^{Q'} \mathbf{D}_{q'}[i] \mathbf{W}_{2,q'}^H[i] \mathbf{r}^*[i], \tag{4}$$

where $\mathbf{z}[i] = [z[i(N+v)+v], \ldots, z[(i+1)(N+v)-1]]^T$, $\mathbf{r}[i]$ is the received block in the ith OFDM block after removing the CP and taking into account the time-domain filter span and the decision delay defined as $\mathbf{r}[i] = [r[i(N+v)+v+d-L'], \ldots, r[(i+1)(N+v)+d-1]]^T$, $\mathbf{D}_{q'}[i]$ is a diagonal matrix with the q'th time-varying basis components on its diagonal $\mathbf{D}_{q'}[i] = \text{diag}\{[e^{j2\pi q'(i(N+v)+v+d)/K}, \ldots, e^{j2\pi q'((i+1)(N+v)+d-1)/K}]^T\}$, and $\mathbf{W}_{a,q}[i]$ is an $(N+L') \times N$ Toeplitz matrix with the first column equal to $[w_{a,q,L'}[i], \ldots, w_{a,q,0}[i], 0_{1\times(N-1)}]^T$ and the first row equal to $[w_{a,q,L'}[i], 0_{1\times(N-1)}]$. Since we are only interested in the ith block (without loss of generality), for the sake of a simple notation the block index i will be dropped form now on. By means of a 1-tap frequency-domain equalizer, an estimate of the transmitted symbol on the kth sub-carrier in the ith OFDM block can be written as:

$$S_k = \frac{1}{\gamma_k} \mathscr{F}^{(k)} \mathbf{z}, \tag{5}$$

where γ_k is the 1-tap frequency-domain equalizer on the kth sub-carrier in the ith OFDM block, and $\mathscr{F}^{(k)}$ is the kth row of the unitary discrete Fourier transform (DFT) matrix $\mathscr{F}$.

Transferring the TEQ to the frequency-domain, the estimate of the transmitted QAM symbol on the kth sub-carrier in the ith OFDM symbol can be written as:

$$\hat{S}_k = \sum_{p=0}^{P-1} \sum_{k'=-K'}^{K'} \mathscr{F}^{(k-k')} \mathbf{D}_p \mathbf{R} \hat{\mathbf{D}}_p^* \mathbf{w}_{1,p}^{(k-k')*} + \sum_{p=0}^{P-1} \sum_{k'=-K'}^{K'} \mathscr{F}^{(k-k')} \mathbf{D}_{-p} \mathbf{R}^* \hat{\mathbf{D}}_p \mathbf{w}_{2,p}^{(k-k')*}, \tag{6}$$

where $2K'+1$ is the span of adjacent sub-carriers involved in the equalization process, $\hat{\mathbf{D}}_p = \text{diag}[1, \ldots, e^{j2\pi pL'/K}]^T$, $\mathbf{w}_{a,p}^{(k)} = [w_{a,p,0}^{(k)}, \ldots, w_{a,p,L'}^{(k)}]^T$, and $\mathbf{R}$ is an $N \times (L'+1)$ Toeplitz matrix with first column $[r[i(N+v)+v+d], \ldots, r[(i+1)(N+v)+d-1]]^T$, and first row $[r[i(N+v)+v+d], \ldots, r[i(N+v)+v+d-L']]$. For more details about the last step the reader is referred to [13]. The estimate in (6) corresponds to the so-called PTEQ in the frequency-domain. Note that, we defined the second filter differently than the first filter and at the same time we unified the span of the different PTEQs to serve our purpose and simplify the forthcoming analysis. The estimate in (6) can now be equivalently written as:

$$\hat{S}_k = \sum_{p=0}^{P-1} \sum_{k'=-K'}^{K'} \mathbf{w}_{1,p}^{(k-k')H} \tilde{\mathbf{F}}^{(k-k')} \mathbf{r}_p + \sum_{p=0}^{P-1} \sum_{k'=-K'}^{K'} \mathbf{w}_{2,p}^{(k-k')H} \tilde{\mathbf{F}}^{(k-k')} \mathbf{r}_p^*, \tag{7}$$

where the $(L'+1) \times (N+L')$ matrix $\tilde{\mathbf{F}}^{(k)}$ is given by:

$$\tilde{\mathbf{F}}^{(k)} = \begin{bmatrix} 0 & \cdots & 0 & \boxed{\mathscr{F}^{(k)}} & & \\ \vdots & 0 & \boxed{\mathscr{F}^{(k)}} & & 0 & \\ 0 & \ddots & & \ddots & 0 & \vdots \\ \boxed{\mathscr{F}^{(k)}} & & 0 & \cdots & 0 & \end{bmatrix},$$

and $\mathbf{r}_p = \bar{\mathbf{D}}_p \mathbf{r}$ where $\bar{\mathbf{D}}_p$ is the pth phase-shift matrix in the time-domain given by $\bar{\mathbf{D}}_p = \text{diag}\{[e^{j2\pi p(i(N+v)+v+d-L')/K}, \ldots, e^{j2\pi p((i+1)(N+v)+d-1)/K}]^T\}$. In (7), the estimate of the transmitted symbol on the kth sub-carrier of the ith OFDM block is obtained by performing a sliding DFT

on the received sequence, i.e. by performing an N-point DFT within a sliding-window of size L'. The outputs of the sliding DFT ($L'+1$ outputs) are fed to the PTEQ equalizer. The implementation complexity of the sliding DFT can be significantly reduced by performing only one DFT and compensate for the other sliding DFTs by means of L' difference terms, as explained in the following properties [15]:

$$\tilde{\mathbf{F}}^{(k)}\mathbf{r}_p = \mathbf{T}^{(k)} \begin{bmatrix} R_p^{(k)} \\ \Delta\mathbf{r}_p \end{bmatrix} \begin{matrix} \updownarrow 1 \times 1 \\ \updownarrow L' \times 1 \end{matrix}, \tag{8a}$$

and

$$\tilde{\mathbf{F}}^{(k)}\mathbf{r}_p^* = \mathbf{T}^{(k)} \begin{bmatrix} R_p^{(N-k)*} \\ \Delta\mathbf{r}_p^* \end{bmatrix} \begin{matrix} \updownarrow 1 \times 1 \\ \updownarrow L' \times 1 \end{matrix}, \tag{8b}$$

where $R_p^{(k)}$ is the kth sub-carrier frequency response of the received sequence on the pth branch defined as $R_p^{(k)} = \mathscr{F}^{(k)}\left[r_p[i(N+\nu)+\nu+d],\ldots,r_p[(i+1)(N+\nu)+d-1]\right]^T$, and $\mathbf{T}^{(k)}$ is the circulant shift matrix corresponding to the kth sub-carrier, which is an $(L'+1)\times(L'+1)$ lower triangular Toeplitz matrix given by:

$$\mathbf{T}^{(k)} = \begin{bmatrix} 1 & 0 & \cdots & 0 \\ \delta_k & \ddots & \ddots & \vdots \\ \vdots & \ddots & \ddots & 0 \\ \delta_k^{L'} & \cdots & \delta_k & 1 \end{bmatrix}, \tag{9}$$

with $\delta_k = e^{-j2\pi k/N}$. The difference terms vector $\Delta\mathbf{r}$ is given by:

$$\Delta\mathbf{r}_p = \begin{bmatrix} [\mathbf{r}_p]_{L'} - [\mathbf{r}_p]_{N+L'} \\ \vdots \\ [\mathbf{r}_p]_1 - [\mathbf{r}_p]_N \end{bmatrix}.$$

Defining $\mathbf{v}_{a,p}^{(k)H} = \mathbf{w}_{a,p}^{(k)H}\mathbf{T}^{(k)}$, (7) can be written as:

$$\hat{S}_k = \sum_{p,k'}\left(\mathbf{v}_{1,p}^{(k-k')H}\begin{bmatrix} R_p^{(k-k')} \\ \Delta\mathbf{r}_p \end{bmatrix} + \mathbf{v}_{2,p}^{(k-k')H}\begin{bmatrix} R_p^{(N-k')*} \\ \Delta\mathbf{r}_p^* \end{bmatrix}\right). \tag{10}$$

Notice that the difference terms are common to all sub-carriers which allows for a further reduction in complexity. To do so, we first collect the first element of the vectors $\mathbf{v}_{a,p}^{(k-k')}$, for $k' \in \{-K',\ldots,K'\}$ in the vector $\tilde{\mathbf{u}}_{a,p}^{(k)}$, i.e. $\tilde{\mathbf{u}}_{a,p}^{(k)} = [v_{a,p,0}^{(k-K')},\ldots,v_{a,p,0}^{(k+K')}]^T$. Second, we sum over the remaining elements that correspond to the difference terms as $\bar{\mathbf{u}}_{a,p}^{(k)} = \sum_{k=-K'}^{K'}[v_{a,p,1}^{(k-k')},\ldots,v_{a,p,L'}^{(k-k')}]^T$. Collecting these two vectors in one vector as $\mathbf{u}_{a,p}^{(k)} = [\tilde{\mathbf{u}}_{a,p}^{(k)T}, \bar{\mathbf{u}}_{a,p}^{(k)T}]^T$, (10) can now be written as:

$$\hat{S}_k = \sum_{p=0}^{P-1}\left(\mathbf{u}_{1,p}^{(k)H}\begin{bmatrix} R_p^{(k-K')} \\ \vdots \\ R_p^{(k+K')} \\ \hline \Delta\mathbf{r}_p \end{bmatrix} + \mathbf{u}_{2,p}^{(k)H}\begin{bmatrix} R_p^{(N-k-K')*} \\ \vdots \\ R_p^{(N-k+K')*} \\ \hline \Delta\mathbf{r}_p^* \end{bmatrix}\right). \tag{11}$$

The implementation of (11) is shown in Figure 1. Define $\mathbf{u}_a^{(k)} = [\mathbf{u}_{a,0}^{(k)T},\ldots,\mathbf{u}_{a,P-1}^{(k)T}]^T$, (11) can be written in a compact form as:

$$\hat{S}_k = \mathbf{u}_1^{(k)H}\mathbf{A}^{(k)}\mathbf{r} + \mathbf{u}_2^{(k)H}\mathbf{A}^{(N-k)*}\mathbf{r}^*, \tag{12}$$

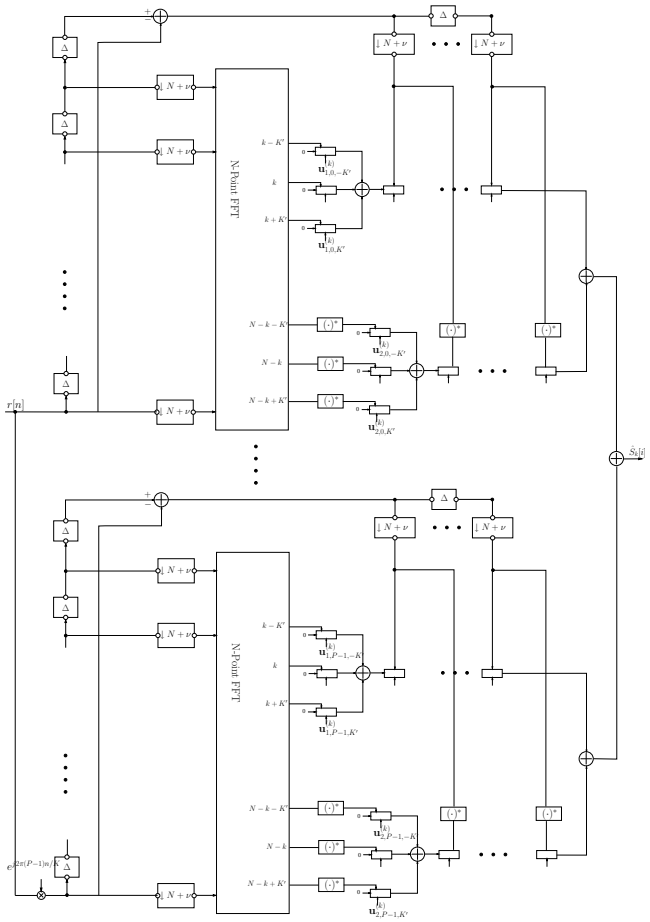

Figure 1: PTEQ for OFDM over doubly selective channel with IQ-imbalance

where $\mathbf{A}^{(k)} = [\mathbf{F}_0^{(k)T},\ldots,\mathbf{F}_{P-1}^{(k)T}]^T$, with

$$\mathbf{F}_p^{(k)} = \begin{bmatrix} 0_{1\times L'} & & \mathscr{F}^{(k-K')} \\ \vdots & & \vdots \\ 0_{1\times L'} & & \mathscr{F}^{(k+K')} \\ \hline \mathbf{I}_{L'} & 0_{L'\times(N-L')} & -\mathbf{I}_{L'} \end{bmatrix}\bar{\mathbf{D}}_p,$$

with $\bar{\mathbf{I}}_{L'}$ an anti-diagonal identity matrix of size $L'\times L'$.

Due to the IQ-imbalance, the kth sub-carrier and its mirror the $N-k$th sub-carrier are combined to obtain an estimate of the transmitted symbol on the kth sub-carrier for $k \in \{1,\ldots,N/2-1\}$. The same holds for the case of an estimate of the transmitted symbol on the $N-k$th sub-carrier. This suggests, that a proper equalizer estimates the transmitted symbol on the kth sub-carrier and the one transmitted on the $N-k$th sub-carrier in a joint fashion. For this purpose we can obtain the following:

$$\underbrace{\begin{bmatrix} \hat{S}_k \\ \hat{S}_{N-k}^* \end{bmatrix}}_{\tilde{\mathbf{s}}_k} = \underbrace{\begin{bmatrix} \mathbf{u}_1^{(k)H} & \mathbf{u}_2^{(k)H} \\ \mathbf{u}_2^{(N-k)T} & \mathbf{u}_1^{(N-k)T} \end{bmatrix}}_{\mathbf{U}^{(k)H}}\underbrace{\begin{bmatrix} \mathbf{A}^{(k)} & 0 \\ 0 & \mathbf{A}^{(N-k)*} \end{bmatrix}}_{\tilde{\mathbf{A}}^{(k)}}\begin{bmatrix} \mathbf{r} \\ \mathbf{r}^* \end{bmatrix} \tag{13}$$

At this point we may introduce a model for the received sequence $\mathbf{r}$. Note that due to the time-domain filter span and the decision delay, the received sequence is written to cover three consecutive OFDM blocks; $i-1$, i and $i+1$. In the absence of IQ-

imbalance, the received sequence can therefore be written as:

$$\mathbf{y} = \underbrace{[O_1, \mathbf{G}, O_2]}_{\tilde{\mathbf{G}}} (\mathbf{I}_3 \otimes \mathbf{P}) \left(\mathbf{I}_3 \otimes \mathscr{F}^H\right) \begin{bmatrix} \mathbf{s}[i-1] \\ \mathbf{s}[i] \\ \mathbf{s}[i+1] \end{bmatrix} + \mathbf{v}[i], \quad (14)$$

where $\mathbf{y}$ is similarly defined as $\mathbf{r}$, $O_1 = 0_{(N+L')\times(N+2\nu+d-L-L')}$, $O_2 = 0_{(N+L')\times(N+\nu-d)}$, and $\mathbf{G}$ is an $(N+L')\times(N+L'+L)$ matrix representing the time-varying channel

$$\mathbf{G} = \begin{bmatrix} g[n;L] & \dots & g[n;0] & & 0 \\ & \ddots & & \ddots & \\ 0 & & g[n';L] & \dots & g[n';0] \end{bmatrix},$$

where $n = i(N+\nu)+\nu+d-L'$, and $n' = (i+1)(N+\nu)+d-1$. $\mathbf{P}$ is the CP insertion matrix given by:

$$\mathbf{P} = \begin{bmatrix} 0_{\nu\times(N-\nu)} & \mathbf{I}_\nu \\ & \mathbf{I}_N \end{bmatrix},$$

and $\mathbf{s}[i] = [S_0[i], \dots, S_{N-1}[i]]^T$ is the vector of QAM symbols transmitted on the ith OFDM block. $\mathbf{v}$ is the noise vector similarly defined as $\mathbf{r}$. Note that, we can also approximate the channel using the BEM with window size $N' \geq N$ independent of the BEM resolution of the TEQs. In this paper we restrict ourselves to the channel definition given earlier. Hence, we can write the received sequence and its conjugate as in (15) shown at the top of next page. $\mathbf{Z}_1$ is an $N \times N$ matrix defined as:

$$\mathbf{Z}_1 = \begin{bmatrix} 1 & 0 & \cdots & 0 \\ 0 & & & \\ \vdots & & \bar{\mathbf{I}}_{N-1} & \\ 0 & & & \end{bmatrix}.$$

To obtain the PTEQ coefficients for the kth and $(N-k)$th sub-carriers (i.e. solve for $\mathbf{U}^{(k)}$), we define the following mean-squared error (MSE) cost function:

$$\mathscr{J} = \mathscr{E}\left\{ \left\| \tilde{\mathbf{s}}_k - \mathbf{U}^{(k)H} \begin{bmatrix} \mathbf{r} \\ \mathbf{r}^* \end{bmatrix} \right\|^2 \right\}.$$

The minimum MSE (MMSE) solution can be then obtained as:

$$\mathbf{U}^{(k)} = \arg\min_{\mathbf{U}^{(k)}} \mathscr{J}. \quad (16)$$

The solution of (16) is obtained by solving $\partial\mathscr{J}/\partial\mathbf{U}^{(k)} = 0$ and is equal to:

$$\mathbf{U}^{(k)} = \left(\tilde{\mathbf{A}}^{(k)} \left(\mathbf{H}\mathbf{R}_s\mathbf{H}^H + \mathbf{R}_{\tilde{v}}\right) \tilde{\mathbf{A}}^{(k)H}\right)^{-1} \tilde{\mathbf{A}}^{(k)} \mathbf{H}\mathbf{R}_s \times [\mathbf{e}_{3N+k+1} \mathbf{e}_{4N+k+1}], \quad (17)$$

where $\mathbf{R}_s$ and $\mathbf{R}_{\tilde{v}}$ are the transmitted sequence covariance matrix, and the noise covariance matrix respectively, and $\mathbf{e}_{k'}$ is a $6N$ long unity vector with a 1 at the k'th position.

The proposed PTEQ unifies and extends many previously proposed PTEQs for OFDM. In this context the proposed PTEQ extends and unifies:

- The PTEQ for OFDM transmission over doubly selective channels with perfect IQ-balance proposed in [16].
- The PTEQ for OFDM transmission over TI channels with IQ-imbalance and CFO proposed in [11]. There only critically sampling is used since CFO was the only source of time-variation.

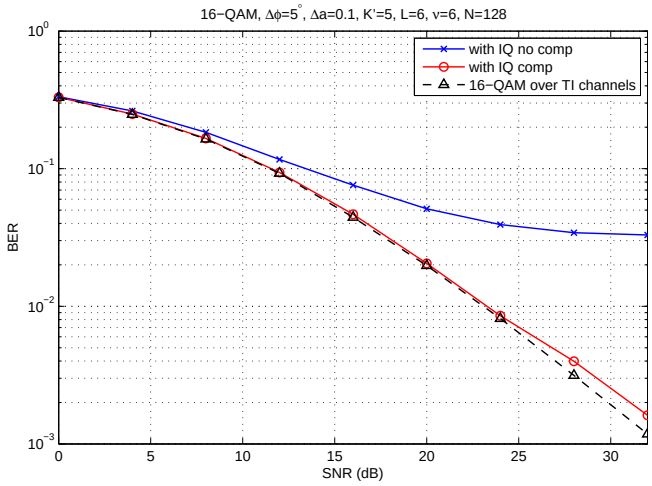

Figure 2: BER vs SNR for OFDM over doubly selective channels $\nu = L$.

- With no IQ-imbalance, no CFO, and the channel is TI, the proposed PTEQ boils down to the PTEQ proposed in [17] for xDSL.

The implementation complexity of the proposed PTEQ is $P(2K'+L'+1)$ multiply-add (MA) operations per sub-carrier plus $P\mathscr{O}(N\log_2 N)$ MA operation for the FFTs. The design complexity of the PTEQ (see (17)) on the other hand, is of $\mathscr{O}(N^3)$ MA operations for $N \gg 2P(2K'+L'+1)$.

4. SIMULATIONS

In this section we present some of the simulation results of the proposed equalization technique for OFDM transmission over doubly selective channels. We consider an OFDM system with $N = 128$ sub-carriers. The doubly selective channel is assumed to be of order $L = 6$. The channel taps are simulated as i.i.d random variables, correlated in time according to Jakes' model with correlation function $r_h(\tau) = J_0(2\pi f_{max} T)$, where J_0 is the zeroth-order Bessel function of the first kind, with maximum Doppler spread $f_{\max} = 100Hz$ and sampling time $T = 1\mu sec$. The IQ-imbalance parameters are assumed to be known at the receiver with amplitude-imbalance $\Delta a = 0.1$ and phase-imbalance $\Delta\phi = 5^\circ$. 16-QAM signaling is used in the simulations. We measure the performance in terms of BER vs. SNR.

• In the first setup we assume the CP-length ν fits within the channel impulse response length. The oversampling factor is assumed to be $P = 1$. The PTEQ is designed to have order $L' = 0$, and ICI span of $K' = 5$. The simulation results are shown in Figure 2. The IQ-imbalance (if not properly compensated for) results in a significant degradation of the system performance. For this setup, the IQ-imbalance results in a BER error floor at BER$= 3\times10^{-2}$. The PTEQ with IQ-imbalance compensation enhances the performance significantly, which roughly coincides with that of 16-QAM OFDM transmission over TI channels, especially for low SNR values.

• In the second setup, we assume the CP-length is shorter than the channel impulse response length. The CP-length $\nu = 3$ in this case. The PTEQ is designed to have order $L' = 8$, and the ICI span is $K' = 2$. We consider the critically sampled case $P = 1$ as well as the oversampled case with oversampling factor $P = 2$. As shown in Figure 3, IQ-imbalance degrades the performance significantly for the critically sampled as well as for the oversampled case, where a BER error floor is observed at BER$= 2\times10^{-2}$. The PTEQ with IQ-imbalance compensation enhances the system performance significantly for both the critically sampled and the oversampled cases

$$\begin{bmatrix}\mathbf{r}\\ \mathbf{r}^*\end{bmatrix} = \underbrace{\begin{bmatrix}\alpha\tilde{\mathbf{G}}\left(\mathbf{I}_3\otimes\mathbf{P}\right)\left(\mathbf{I}_3\otimes\mathscr{F}^H\right) & \beta\tilde{\mathbf{G}}^*\left(\mathbf{I}_3\otimes\mathbf{P}\right)\left(\mathbf{I}_3\otimes\mathscr{F}^H\right)\\ \beta^*\tilde{\mathbf{G}}\left(\mathbf{I}_3\otimes\mathbf{P}\right)\left(\mathbf{I}_3\otimes\mathscr{F}^H\right) & \alpha^*\tilde{\mathbf{G}}^*\left(\mathbf{I}_3\otimes\mathbf{P}\right)\left(\mathbf{I}_3\otimes\mathscr{F}^H\right)\end{bmatrix}}_{\mathbf{H}}\begin{bmatrix}\mathbf{s}[i-1]\\ \mathbf{s}[i]\\ \mathbf{s}[i+1]\\ \mathbf{Z}_1\mathbf{s}^*[i-1]\\ \mathbf{Z}_1\mathbf{s}^*[i]\\ \mathbf{Z}_1\mathbf{s}^*[i+1]\end{bmatrix}+\tilde{\mathbf{v}}. \tag{15}$$

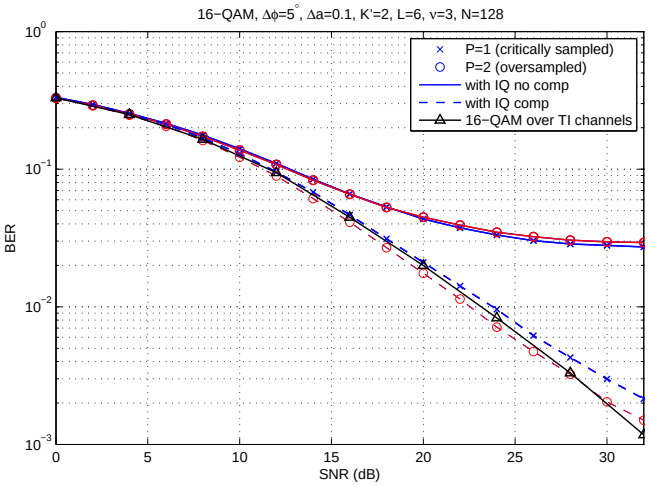

Figure 3: BER vs SNR for OFDM over doubly selective channels $\nu = 3$.

and approaches the performance of that of 16-QAM OFDM transmission over TI channels. A slight enhancement is observed for the case of oversampling over the critically sampled case, where an SNR gain of 1 dB is observed at BER$= 10^{-2}$.

5. CONCLUSIONS

In this paper we have proposed a frequency-domain per-tone equalizer (PTEQ) for OFDM transmission over doubly selective channels with IQ-imbalance and CFO (viewed as part of the doubly selective channel). The PTEQ is designed to equalize the channel and compensate for the IQ-imbalance. The channel is assumed to be time-varying, and the CP-length may be shorter than the channel impulse response length. The PTEQ is obtained by transferring a time-domain equalizer to the frequency-domain. The channel and the IQ-imbalance parameters are assumed to be known at the receiver. The resulting PTEQ combines adjacent sub-carriers and their mirrors to combat ICI/IBI and compensate for IQ-imbalance. While IQ-imbalance degrades the system performance significantly, the proposed PTEQ approaches the performance of OFDM transmission over TI channels with perfect IQ-balance.

REFERENCES

[1] ETSI Standard EN 300 744 v1.4.1, "ETSI Digital Video Broadcasting (DVB); Framing Structure, Channel Coding and Modulation for Digital Terrestrial Television," Aug. 2001.

[2] IEEE 802.11 Task Group a, Part 11, "Wireless LAN Medium Access Control (MAC) and Physical Layer (PHY) Specifications: High-speed Physical Layer in the 5 GHz Band," 1999.

[3] ETSI TS 101 475 V1.2.2 (2001-02), "ETSI Broadband Radio Access Networks (BRAN): HIPERLAN Type 2: Physical (PHY) Layer," Aug. 1999.

[4] P. H. Moose, "A Technique for Orthogonal Frequency Division Multiplexing Frequency Offset Correction," *IEEE Trans. Commun.*, vol. 42, pp. 2908–2914, Oct. 1994.

[5] J. H. Yu and Y. T. Su, "Pilot-Assisted Maximum-Likelihood Frequency-Offset Estimation for OFDM Systems," *IEEE Trans. Commun.*, vol. 52, pp. 1997–2008, Nov. 2004.

[6] J. Tubbax, B. Come, L. V. der Perre, L. Deneire, S. Donnay, and M. Engels, "Compensation of IQ Imbalance in OFDM Systems," in *IEEE Int. Conf. on Communications*, (Anchorage, Alaska USA), May, 11-15 2003.

[7] C.-L. Liu, "Impacts of I/Q Imbalance on QPSK-OFDM-QAM Detection," *IEEE Trans. Consumer Electron.*, vol. 44, pp. 984–989, Aug. 1998.

[8] A. Targhiat and A. H. Sayed, "On the Baseband Compensation of IQ Imbalance in OFDM Systems," in *IEEE Int. Conf. on Acoustics, Speech, and Signal Processing*, (Montreal, Canada), May 2004.

[9] J. Tubbax, A. Fort, L. V. der Perre, S. Donnay, M. Engels, M. Moonen, and H. D. Man, "Joint Compensation of IQ Imbalance and Frequency Offset in OFDM Systems," in *IEEE Global Communications Conference*, (San Francisco, CA USA), December, 1-5 2003.

[10] S. Fouladifard and H. Shafiee, "Frequency Offset Estimation in OFDM Systems in Presence of IQ Imbalance," in *ICCS*, (Singapore), Nov. 2002.

[11] I. Barhumi and M. Moonen, "IQ Compensation for OFDM in the Presence of IBI and Carrier Frequency-Offset," *IEEE Trans. Signal Processing*, Jan. 2006. (accepted).

[12] M. Valkama and V. Koivunen, "Advanced Methods for I/Q Imbalance Compensation in Communication Receivers," *IEEE Trans. Signal Processing*, vol. 49, pp. 2335–2344, Oct. 2001.

[13] I. Barhumi, G. Leus, and M. Moonen, "Per-Tone Equalization for OFDM over Doubly Selective Channels," in *IEEE Int. Conf. on Communications*, (Paris, France), June 2004.

[14] I. Barhumi, G. Leus, and M. Moonen, "Time-Domain and Frequency-Domain Per-Tone Equalization for OFDM over Doubly Selective Channels," *Signal Processing*, vol. 84/11, pp. 2055–2066, 2004. Special Section Signal Processing in Communications.

[15] E. Jacobsen and R. Lyons, "The Sliding DFT," *IEEE Signal Processing Mag.*, vol. 20, pp. 74–80, Mar. 2003.

[16] I. Barhumi, G. Leus, and M. Moonen, "Equalization for OFDM over Doubly Selective Channels," *IEEE Trans. Signal Processing*, Feb. 2005. (accepted).

[17] K. van Acker, G. Leus, M. Moonen, O. van de Wiel, and T. Pollet, "Per-tone Equalization for DMT-based Systems," *IEEE Trans. Commun.*, vol. 49, Jan. 2001.