ELSEVIER

Journal of Food Engineering **35** (1998) 65–73
© 1998 Elsevier Science Limited. All rights reserved
Printed in Great Britain
PII: S0260-8774(98)00009-0 0260-8774/98 $19.00+0.00

A Kinetic Model for Transpiration of Fresh Produce in a Controlled Atmosphere

Jun Soo Kang[a] & Dong Sun Lee[b]*

[a]Department of Food Engineering, Dongeui Technical College, 72 Yangjeong-dong, Pusanjin-ku, Pusan, 614-715 South Korea
[b]Department of Food Engineering, Kyungnam University, 449 Wolyoung-dong, Masan, 631-701 South Korea

(Received 18 June 1997; accepted 21 December 1997)

ABSTRACT

A simple transpiration model based on heat and mass balances between produce and storage atmosphere was developed and tested experimentally to predict moisture loss of fresh produce in normal air and in a controlled atmosphere. The transpiring water transfer was coupled to heat transfer at steady state. Sum of heat energies transferred through natural convection from ambient air and generated from respiration inside the produce was assumed to be supplied for evaporating moisture on the surface. Respiration heat was obtained from measured respiration rate of O_2 consumption and CO_2 production, and convective heat transfer was calculated from an empirical formula for natural convection, in which produce temperature was taken as wet bulb temperature. The moisture losses estimated by the developed model were in good agreement with experimental data of weight change for the apples and minimally processed vegetables stored under controlled atmospheric conditions and normal air. The model is advantageous since it is simple and requires only a small number of input variables, which are easily measurable. © *1998 Elsevier Science Limited. All rights reserved*

NOTATION

A	Surface area of produce (m^2)
C_p	Specific heat of produce (J/kg °C)
d	Characteristic dimension of fresh produce (m)

*To whom correspondence should be addressed.

h	Convective heat transfer coefficient (J/m^2 °C h)
Gr	Grashof number
k	Thermal conductivity of air (J/m °C h)
L_m	Rate of water loss (kg/h)
Q_r	Respiration heat (J/kg h)
r_{O2}	Respiration rate of oxygen consumption (mmol/kg h)
r_{CO2}	Respiration rate of carbon dioxide evolution (mmol/kg h)
T_a	Ambient temperature (°C)
T_p	Produce temperature (°C)
t	Time (h)
W	Produce weight (kg)
λ	Latent heat of moisture evaporation (J/kg)

INTRODUCTION

Moisture loss or transpiration is an important physiological process that affects the main qualities of fresh fruits and vegetables such as saleable weight, appearance, texture and flavour. A loss in weight of only 5% often causes fresh produce to lose freshness and appear wilted (Ben-Yehoshua, 1987; Wills *et al.*, 1989). Predicting water loss, therefore, is helpful for estimating the shelf-life of fresh produce and designing its storage and packaging conditions. Particularly in controlled-atmosphere (CA) storage, where weight cannot be easily measured without disturbing the storage atmosphere, accurate estimation of water loss can be valuable for controlling and managing the storage facilities.

Transpiration rate is influenced by factors such as surface area, respiration rate, temperature, humidity and air movement. Several models for estimating transpiration rate have been proposed. Biophysical properties of the skin, air film resistance, respiration heat generation, evaporative cooling, convective and radiative heat flows, vapour pressure lowering due to dissolved substances, and temperature distribution inside the produce were analysed as variables affecting the transpiration rate (Fockens & Meffert, 1972; Hayakawa & Succar, 1982; Sastry & Buffington, 1982; Gaffney *et al.*, 1985). Most models describe the moisture transfer through the skin as a function of the biophysical and thermophysical properties such as surface cellular structure, skin thickness, pore fraction in the skin, geometry and thermal diffusivity of produce, which are not easily measured or determined. Therefore, a model using a minimum number of easily measurable parameters is desirable for wide applicability. The objective of this study is therefore to develop a simple transpiration model, which can easily be applied in controlled atmosphere storage.

THEORETICAL DEVELOPMENT OF THE MODEL

Model development was based on heat and mass balances between produce and storage atmosphere. The water loss of mass transfer can be coupled to heat transfer from respiration and convection as described by an energy balance equation on the produce:

$$Q_r W + hA(T_a - T_p) = L_m \lambda + WC_p(dT_p/dt) \quad (1)$$

Equation (1) states that heat energies transferred through natural convection from ambient air and generated from respiration within the produce are used for latent heat of moisture evaporation and sensible heat of produce temperature change. A similar approach of heat balance had been applied to modified atmosphere packaging of blueberry by Song (1995) to estimate the humidity inside the package. It is assumed that the produce has homogeneous internal temperature. For the storage condition of steady state, the produce temperature may be assumed to be constant and the term containing (dT_p/dt) in eqn (1) becomes zero. The rate of moisture evaporation from the fresh produce is thus written as:

$$L_m = \frac{Q_r W + hA(T_a - T_p)}{\lambda} \tag{2}$$

Respiration heat may be assumed to be produced in proportion to the amount of O_2 consumed and/or CO_2 evolved following eqn (3) (Toledo *et al.*, 1969; Kader, 1989).

$$C_6H_{12}O_6(s) + 6O_2(g) \rightarrow 6CO_2(g) + 6H_2O(l) + 2816 \text{ kJ} \tag{3}$$

Therefore, respiration heat, Q_r may be calculated by eqn (4) based on the oxidation of glucose:

$$Q_r = \left(\frac{2816}{6}\right) \times \frac{(r_{O2} + r_{CO_2})}{2} \tag{4}$$

Substrates for the respiration process may differ with commodities and controlled atmosphere conditions, which can result in varieties of respiratory quotient (CO_2 evolved/O_2 consumed) and the respiration heat (Toledo *et al.*, 1969; Kays, 1991). However, eqn (4) is thought to represent a typical heat evolution rate generally accepted for the respiration of fresh produce (Kays, 1991).

If steady state conditions are established and respiration heat is based on initial weight, all the terms on the right side of eqn (2) become constant and give constant weight loss in the storage. For normal storage of fresh fruits and vegetables, produce temperature may be assumed to be at wet bulb temperature for storage conditions, which can be calculated from a psychrometric chart (ASAE, 1979; Wills *et al.*, 1989). The convective heat transfer coefficient is calculated using the empirical formulae of eqns (5) and (6) for natural convection of a horizontal cylinder and sphere in a laminar region, respectively (Holman, 1976).

$$h = (3600 \times 1.32) \times \left(\frac{T_a - T_p}{d}\right)^{0.25} \tag{5}$$

$$h = \frac{k(2 + 0.39Gr^{0.25})}{d} \tag{6}$$

For other geometries, corresponding formulae for the heat transfer coefficient may be obtained from the literature. By integrating eqn (2), moisture loss of stored fresh

produce can be obtained as a function of time. The proposed transpiration model is unique in that the transpiration rate is obtained from heat generation and transfer rate. Most of the published analyses on the water loss from fresh produce (Fockens & Meffert, 1972; Hayakawa & Succar, 1982; Sastry & Buffington, 1982; Gaffney *et al.*, 1985) were based on the driving force of water vapour pressure gradient, which is different from this study.

MATERIALS AND METHODS

Materials

Whole apple and minimally processed cut vegetables were used for measuring water loss and respiration during storage. Apples (*Malus pumila* Miller) of about 350 g, variety 'Fuji' were harvested from an orchard in Andong, Korea, transported to the laboratory and precooled to 0°C prior to respiration measurement and storage trials. Onions (*Allium cepa* L.) and green onions (*Allium fistulosum* L.) purchased from a market in Masan, Korea, were cut to ready-to-eat sizes and equilibrated at 10°C. Onions were peeled by hand, washed, halved and then cut into 0.5 cm thickness. Green onions were cleaned, washed, cut into 2.2 cm thickness and drained by centrifuging in a salad spinner for 1 min. Average diameter of green onion stalks was 1.05 cm. In the application of the proposed model to experimental data of stored fresh produces, apples were assumed as spheres and prepared vegetables such as cut onions and green onions were taken as cylinders.

Measurement of respiration rate

Respiration of apple and cut produces was measured by closed system experiment. Fresh produce of known weight equilibrated at the desired temperature was placed in a closed jar or chamber, through which a gas mixture of the required O_2 and CO_2 concentrations was flushed before closing its opening. Head space gas in the chamber was periodically sampled until its CO_2 concentration increased by 1 or 2%, and O_2 and CO_2 concentrations were analysed using a Hewlett Packard 5890A gas chromatograph equipped with a thermal conductivity detector. Alltech CTR I column (Alltech Associates, Inc, Deerfield, IL, USA) was used with helium as a carrier gas at a flow rate of 65 ml/min and a column temperature of 30°C. Respiration rates of O_2 consumption and CO_2 evolution were calculated from the linear regression of O_2 decrease and CO_2 build-up curves. Slopes of regression lines were multiplied by the free volume and then divided by sample weight to obtain respiration rates in mmol/kg h.

Measurement of transpiration during storage

For measuring transpiration of apples in controlled atmospheric conditions, ten fruit samples were stored at 0°C and relative humidity of 100% for 35 days in a storage chamber (0.75 m × 0.45 m × 0.38 m) equipped with gas control and data acquisition systems (Fig. 1). The gas control system consists of a gas supply and circulation unit (Bonomi System, Fruit Control Co., Italy), a paramagnetic O_2 analyser (Model 655, Fruit Control Co., Italy) and an infrared CO_2 analyser (Model SS305, Fruit Control

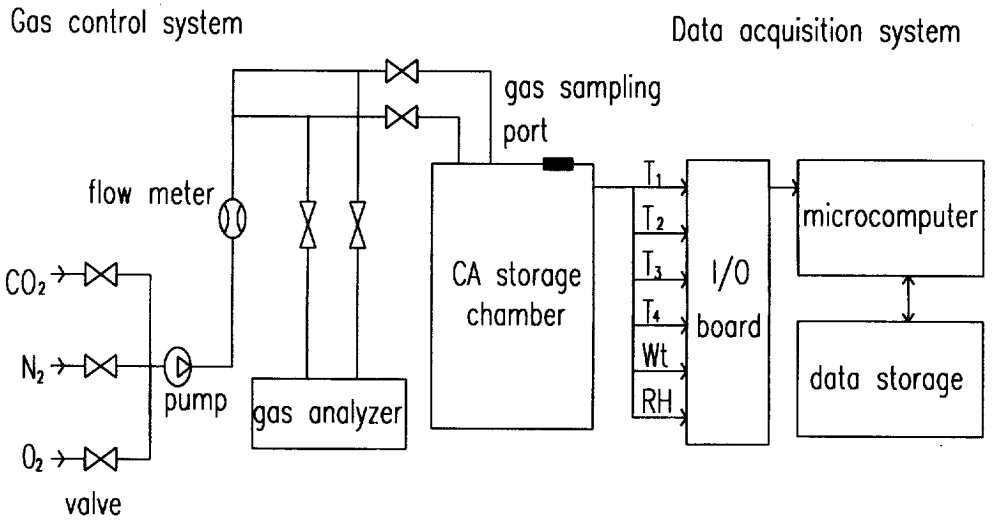

Fig. 1. Scheme of measuring water loss for apples stored in a controlled atmosphere.

Co., Italy). It was used to maintain and control the chamber atmosphere at any desired O_2 and CO_2 concentrations by checking gas concentrations and manually manipulating gas valves daily to offset any deviation. The data acquisition system consisted of a temperature transducer (Model DSTC-ID1-Yu, Delta I/O Co., Korea), weight transducer (Model LM-A-L, Kyowa Co., Japan), a humidity sensor (Model PQ653JA1, Shinyoung Co., Japan), an interface circuit and a personal computer. The weight of each apple sample could be measured without opening the chamber. To maintain the saturated relative humidity, a large pan of water was placed on the bottom. The apple samples had been equilibrated over 10 days at 0°C. The applied atmospheres were normal air and controlled atmospheres of 1% O_2 and 1% CO_2, and 3% O_2 and 3% CO_2.

Water losses during storage of cut onions and green onions were measured at 10°C in normal air by weighing them periodically. Cut vegetables spread on a polystyrene tray of 20.5 cm × 15 cm were put in a refrigerator at 10°C and relative humidity of $82 \pm 2\%$. The humidity of the refrigerator was measured by an electric hygrometer (Model Humidat-IC, Novasina AG, Switzerland).

RESULTS AND DISCUSSION

To verify the transpiration model proposed in this study, experimental weight losses of apples stored in normal air and controlled atmospheres were compared with those predicted by solving eqn (2) numerically (Fig. 2). Good agreement between the predicted and experimental values was observed over the 35 day storage period. The weight loss of cut vegetables in normal air could also be estimated satisfactorily by eqn (2) as shown in Fig. 3. Table 1 shows the experimental and estimated

transpiration rates, between which there is generally good agreement. Thus, the transpiration model properly describes the weight loss process.

For the data in Fig. 2, the experimental conditions were those for saturated humidity and therefore produce temperature, which was assumed to be wet bulb temperature, was taken to be equal to air temperature. This assumption might be a little different from the reality of produce stored under saturated conditions, in which the produce temperature rises slightly above environmental temperature due to respiratory heat and acts to cause some moisture loss (Sastry & Buffington, 1982; Song, 1995). However, in this study heat of respiration was assumed to directly contribute to moisture evaporation with produce temperature being equal to environmental air temperature under saturated humidity conditions. In this case the term of convective heat transfer in eqn (2) becomes zero, and only respiration heat results in moisture evaporation. This approach made the model very simple and was also found to successfully estimate weight loss of apples stored in CA under saturated conditions (Fig. 2). As shown in Table 1, higher respiration in normal air results in a higher transpiration rate of the apples. CA of low O_2 and high CO_2

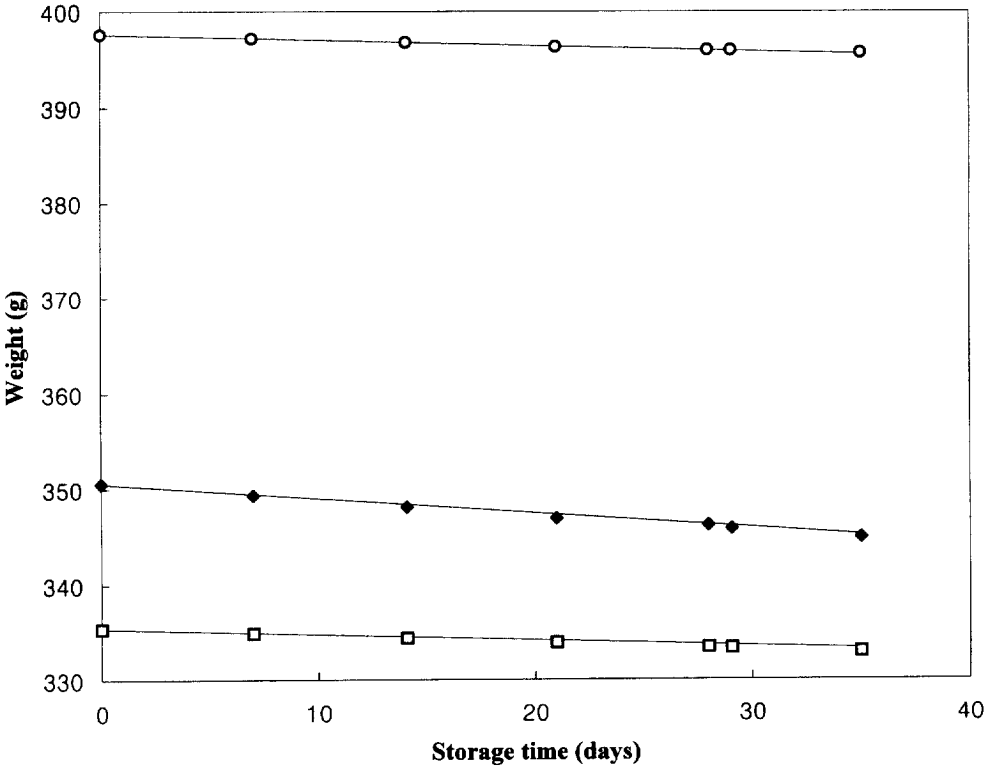

Fig. 2. Comparison between experimental and predicted weight losses for apples stored in normal air and controlled atmosphere at 0°C and relative humidity of 100%. ◆, normal air; ○, O_2 1% and CO_2 1%; □, O_2 3% and CO_2 3%.

concentrations reduced respiration and hence transpiration of apple as stated by eqn (2).

Estimation for data of cut onions and green onions at relative humidity of 82% was affected by both respiration and convectively transferred heat (Fig. 3). Because of the convective heat transfer effect, cut onions of lower respiration caused a higher transpiration rate compared with cut green onions (Table 1). Because cut produce has a large surface area, convective heat transfer may play a greater role in transpiration. There is also high variability in the exposed surface area of cut vegetables. Therefore, accuracy in determining the heat transfer coefficient and surface area becomes more important for estimating transpiration, especially when humidity is low. There were high degrees of irregularities in dimension for cut onions and green onions, and variation in size, shape and orientation of loading would affect the estimated value of surface area and heat transfer coefficient. Their total surface areas were assumed to be equal to the exposed tray area of 0.031 m^2. Their geometries were regarded as horizontal cylinders having respective diameters

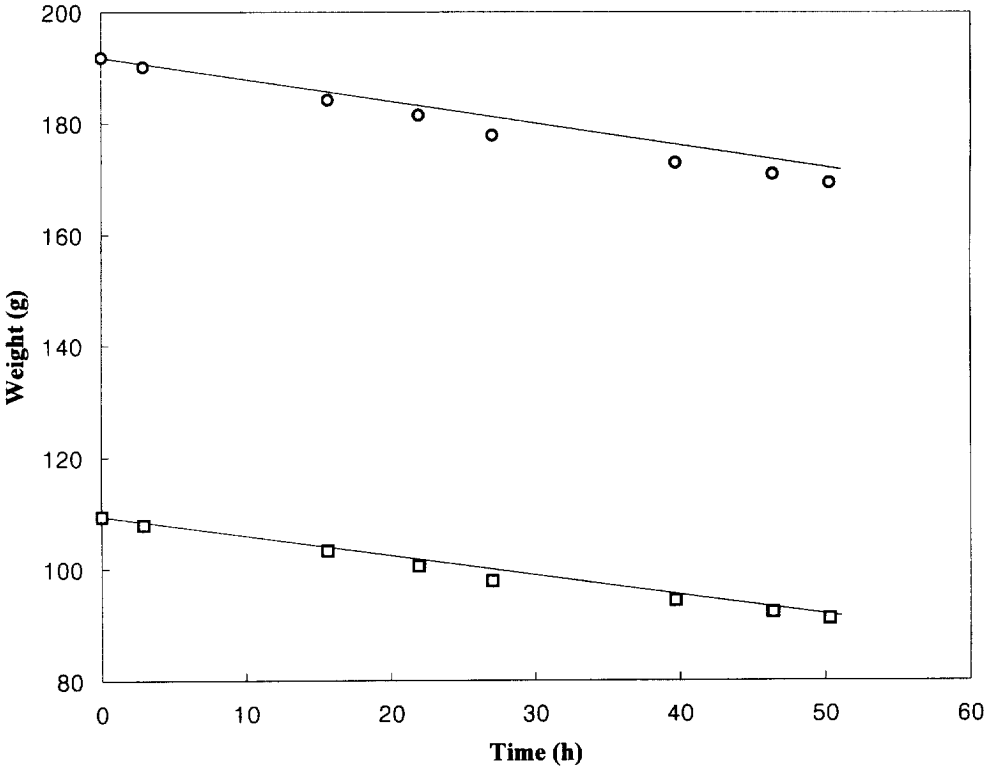

Fig. 3. Experimental versus predicted weight loss for cut onions and green onions stored in normal air at 10°C and relative humidity of 82%. ○, cut onions; □, cut green onions. In prediction, the characteristic dimension for calculation of heat transfer coefficient in eqn (5) was taken as 0.50 cm and 1.05 cm for cut onions and green onions, respectively. The surface area of heat transfer was assumed as 0.031 m^2 for both vegetables.

TABLE 1
Comparison between Estimated and Measured Transpiration Rates for Apple and Minimally Processed Vegetables Stored in Normal Air and Controlled Atmosphere

Commodity	*Storage condition**	*Measured* respiration rate *(mmol/kg h)*		*Transpiration rate (g/kg h)*	
		r_{O_2}	r_{CO_2}	*Measured*	*Estimated*
Apple	0°C, 100% RH, Normal air	0.1154	0.1027	0.0184	0.0181
Apple	0°C, 100% RH, 1% O_2 & 1% CO_2	0.0382	0.0348	0.0057	0.0060
Apple	0°C, 100% RH, 3% O_2 & 3% CO_2	0.0483	0.0414	0.0087	0.0075
Cut onion	10°C, 82% RH, Normal air	0.4539	0.2929	0.4477	0.3918
Cut green onion	10°C, 82% RH, Normal air	1.7685	1.5836	0.3630	0.3488

*The experimental conditions of temperature, relative humidity and atmospheric composition.

of 0.5 and 1.05 cm for cut onions and green onions in estimating heat transfer coefficient by eqn (5). This rough approximation, however, seemed to satisfactorily predict their weight loss during storage (Fig. 3, Table 1).

To predict water loss by the proposed transpiration model, data on respiration rate, convective heat transfer coefficient, surface area and produce temperature are needed. The respiration rate may easily be measured by the closed or open system method, or may be estimated from the literature (Yam & Lee, 1995). Convective heat transfer coefficient may be estimated by using empirical formula or be measured for specific conditions (Holman, 1976; Rizvi & Mittal, 1992). Surface area can be determined from the geometry and dimension of the produce. Produce temperature may usually be assumed as wet bulb temperature, which may be obtained from a psychrometric chart (ASAE, 1979; Wills *et al.*, 1989). If the vapour pressure lowering is significant, it may also be measured under steady state conditions of practical situations. Accuracies in any of these parameters may influence the estimated moisture loss. The small number of the readily measurable parameters in the proposed model may help the model to be easily used in estimating water loss for a variety of situations involving fresh produce storage.

CONCLUSION

The transpiration model developed, based on moisture evaporation and coupled with energy balance could estimate moisture losses for apple and minimally processed vegetables stored under controlled atmospheric and normal air conditions. The model is advantageous in being simple and requiring only a small number of input variables, which are easily measurable.

ACKNOWLEDGEMENTS

This work was supported by Korea Science and Engineering Foundation (Project 95-0402-02-02-3).

REFERENCES

ASAE (1979). *Agricultural Engineers' Handbook*. American Society of Agricultural Engineers, St. Joseph, MI, USA, pp. 341–348.

Ben-Yehoshua, S. (1987). Transpiration, water stress, and gas exchange. In *Postharvest Physiology of Vegetables*, ed. J. Weichmann. Marcel Dekker, New York, pp. 113–170.

Fockens, F. H. & Meffert, H. F. Th. (1972). Biophysical properties of horticultural products as related to loss of moisture during cooling down. *Journal of the Science of Food and Agriculture*, **23**, 285–298.

Gaffney, J. J., Baird, C. D. & Chau, K. V. (1985). Influence of airflow rate, respiration, evaporative cooling, and other factors affecting weight loss calculations for fruits and vegetables. *ASHRAE Transactions*, **91**, 690–707.

Hayakawa, K. & Succar, J. (1982). Heat transfer and moisture loss of spherical fresh produce. *Journal of Food Science*, **47**, 596–605.

Holman, J. P. (1976). *Heat Transfer*. McGraw-Hill, New York, pp. 235–272.

Kader, A.A. (1989). Respiration and gas exchange of vegetables. In *Postharvest Physiology of Vegetables*, ed. J. Weichmann. Marcel Dekker, New York, pp. 25–43.

Kays, S.J. (1991). *Postharvest Physiology of Perishable Plant Products*. Van Nostrand Reinhold, New York, pp. 98–104.

Rizvi, S.S.H. & Mittal, G.S. (1992). *Experimental Methods in Food Engineering*. Van Nostrand Reinhold, New York, pp. 149–155.

Sastry, S. K. & Buffington, D. E. (1982). Transpiration rates of stored perishable commodities: A mathematical model and experiments on tomatoes. *ASHRAE Transactions*, **88**, 159–184.

Song, Y. (1995). Modeling respiration and transpiration in a modified atmosphere packaging system containing blueberry and moisture absorbent. Ph.D. thesis, Rutgers University, New Brunswick, NJ, USA.

Toledo, R., Steinberg, M. P. & Nelson, A. I. (1969). Heat of respiration of fresh produce as affected by controlled atmosphere. *Journal of Food Science*, **34**, 261–264.

Wills, R. B. H., McGlasson, W. B., Graham, D., Lee, T. H. & Hall, E. G. (1989). *Postharvest*. Van Nostrand Reinhold, New York, pp. 53–60.

Yam, K. L. & Lee, D. S. (1995). Design of modified atmosphere packaging for fresh produce. In *Active Food Packaging*, ed. M. L. Rooney. Blackie Academic & Professional, London, pp. 55–73.