On the Use of Dereverberation for Acoustic Feedback Cancellation

Basil Liekens*, Arnout Roebben*, Toon van Waterschoot and Marc Moonen
KU Leuven, Department of Electrical Engineering (ESAT)
STADIUS Center for Dynamical Systems, Signal Processing and Data Analytics
Kasteelpark Arenberg 10, 3001 Leuven, Belgium
*Corresponding authors: {basil.liekens, arnout.roebben}@esat.kuleuven.be

***Abstract*—In public address systems and hearing aids, the maximally achievable amplification or gain is limited by acoustic feedback. Therefore, in order to be able to apply a higher gain, feedback cancellation methods are required. In addition, it is oftentimes also desirable to dereverberate a recorded signal, that is, remove the late reverberation component of the signal, before playing it back. In this paper, it is shown that under two mild conditions, the acoustic feedback signal can be written as a reverberant version of the source signal. Therefore, it is possible to treat the joint dereverberation and acoustic feedback cancellation problem as a dereverberation-only problem, meaning that dereverberation algorithms can be applied to the joint problem. Simulations corroborate this finding.**

***Index Terms*—Dereverberation (DR), Acoustic feedback cancellation (AFC), Weighted prediction error method (WPE)**

I. Introduction

In public address systems (PA) and hearing aids (HA), one of the main tasks is to amplify the signal received at the microphones. However, one of the factors limiting the maximally achievable amplification or gain is acoustic feedback, i.e. the acoustic coupling between the loudspeaker and microphones may lead to instability when the Nyquist stability criterion is violated [1]. Furthermore, in real-life applications the recorded signal oftentimes also contains reverberation. Although the early reflections of a room impulse response (RIR) may improve speech intelligibility, this will not be the case for the late reverberation [2].

In the literature several algorithms have been proposed to deal with both phenomena separately. For acoustic feedback cancellation (AFC) there exist algorithms that alter the frequency or phase of the microphone signals [1], make use of notch filters to suppress the signal components at unstable frequencies [1], perform system identification to remove the feedback contribution from the microphone signals [3], [4], or make use of neural networks, either to guide one of the aforementioned methods [5] or perform feedback cancellation directly [6]. For the dereverberation (DR) problem, the main idea is to model each microphone signal as a source signal filtered with a RIR. This source-to-microphone RIR can then be divided into two contributions: the early reflections and late reverberation. The goal of DR algorithms is therefore to remove the contribution of the late reverberant tail of the RIR while retaining the early reflections [7]–[9].

However, to the best of our knowledge, no/few algorithms that perform joint DR and AFC have been proposed in the literature. Therefore, in this paper, it is shown that under mild conditions, i.e. that the delay in the closed loop is sufficiently long and that the closed loop transfer function can be reasonably approximated by an FIR filter, the feedback component of the microphone signals can be interpreted as a late reverberation component of the source-to-microphone RIRs. This allows to apply DR algorithms to perform joint DR and AFC. Simulations are presented that demonstrate the effectiveness of the proposed approach.

The rest of this paper is structured as follows: Section II introduces the problem. Section III shows that under the aforementioned conditions AFC can be written as a DR problem. Section IV introduces the algorithm used in this paper to perform joint DR and AFC. Section V provides simulation results, with code made available in [10]. The paper ends with conclusions in Section VI.

II. Problem statement

Consider the system depicted in Fig. 1 with M microphones and one loudspeaker. The corresponding signals are denoted as $\mathbf{m}[k] \in \mathbb{R}^M$ and $l[k] \in \mathbb{R}$ with k denoting the time index.

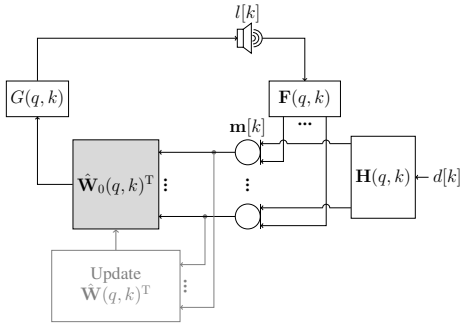

Fig. 1: Illustration of the joint DR and AFC concept where the filter $\hat{\mathbf{W}}_0(q,k)$ is designed to perform this integrated task.

This research was carried out at the ESAT Laboratory of KU Leuven, in the frame of Research Council KU Leuven Project C14-21-0075 "A holistic approach to the design of integrated and distributed digital signal processing algorithms for audio and speech communication devices", and Aspirant Grant 11PDH24N (for A. Roebben) from the Research Foundation - Flanders (FWO). The scientific responsibility is assumed by its authors.

* These authors contributed equally to this work.

These multiple microphones can be exploited to improve the performance of the signal processing in the loop. The loudspeaker signal is obtained from the microphone signals as $l[k] = G(q,k)\hat{\mathbf{W}}_0(q,k)^{\mathrm{T}}\mathbf{m}[k]$ with q^{-1} the unit delay operator, i.e. $q^{-1}d[k] = d[k-1]$. Round brackets are used for (matrices of) transfer functions while square brackets denote (matrices of) scalars. The multiple-input single-output (MISO) filter $\hat{\mathbf{W}}_0(q,k)$ will be designed to perform joint DR and AFC. The forward path $G(q,k)$ then processes the output of this filter by applying the forward path gain and optionally inserting additional delays, i.e. $G(q,k) = gq^{-\delta}$, where $g \in \mathbb{R}$ is the gain and $\delta \in \mathbb{N}$ is the additional delay [4]. A single source emits the signal $d[k] \in \mathbb{R}$, which gets convolved with the source-to-microphone RIRs $\mathbf{H}(q,k)$ to yield the contribution of the source signal at the microphones $\mathbf{s}[k] \in \mathbb{R}^M$

$$\mathbf{s}[k] = \left[H_1(q,k) \cdots H_M(q,k)\right]^{\mathrm{T}} d[k] = \mathbf{H}(q,k)d[k]. \quad (1)$$

The $H_i(q,k)$ are assumed to be FIR filters of order L_H, i.e.

$$H_i(q,k) = h_i[0,k] + \ldots + h_i[L_H - 1, k]q^{-L_H+1}. \quad (2)$$

These $H_i(q,k)$ can be split into an early and late component, $H_{i,e}(q,k)$ and $H_{i,l}(q,k)$, where

$$H_{i,e}(q,k) = h_i[0,k] + \ldots + h_i[L_e - 1, k]q^{-L_e+1}, \quad (3)$$

$$H_{i,l}(q,k) = h_i[L_e,k]q^{-L_e} + \ldots + h_i[L_H - 1, k]q^{-L_H+1}, \quad (4)$$

with L_e the number of samples of the RIR that constitute the early reflections. This leads to

$$\begin{aligned}\mathbf{s}[k] &= \mathbf{s}_e[k] + \mathbf{s}_l[k] \\ &= \left[H_{1,e}(q,k) \cdots H_{M,e}(q,k)\right]^{\mathrm{T}} d[k] \\ &+ \left[H_{1,l}(q,k) \cdots H_{M,l}(q,k)\right]^{\mathrm{T}} d[k] \\ &= \mathbf{H}_e(q,k)d[k] + \mathbf{H}_l(q,k)d[k].\end{aligned} \quad (5)$$

The third contribution in the microphone signal is the feedback signal, defined as $\mathbf{F}(q,k)l[k]$ with $\mathbf{F}(q,k)$ denoting the RIRs from the loudspeaker to the microphones, leading to

$$\begin{aligned}\mathbf{m}[k] &= \mathbf{s}[k] + \mathbf{F}(q,k)l[k] = \mathbf{s}_e[k] + \mathbf{s}_l[k] + \mathbf{F}(q,k)l[k] \\ &= \mathbf{H}_e(q,k)d[k] + \mathbf{H}_l(q,k)d[k] + \mathbf{F}(q,k)l[k].\end{aligned} \quad (6)$$

The goal of joint DR and AFC then consists in designing $\hat{\mathbf{W}}_0(q,k)$ such that the first component $\mathbf{s}_e[k]$ is retained while the late reverberation $\mathbf{s}_l[k]$ as well as the feedback component $\mathbf{F}(q,k)l[k]$ are optimally suppressed.

III. Application of Dereverberation to Feedback Cancellation

In order to show that DR algorithms can be used to perform AFC as well, it is shown that the feedback component in $\mathbf{m}[k]$ can be considered part of the late reverberation. The open loop transfer function of the system of Fig. 1 is

$$l[k] = \frac{G(q,k)\hat{\mathbf{W}}_0(q,k)^{\mathrm{T}}}{1 - G(q,k)\hat{\mathbf{W}}_0(q,k)^{\mathrm{T}}\mathbf{F}(q,k)}\mathbf{s}[k]. \quad (7)$$

Combining this with (1) - (6) then yields

$$\begin{aligned}m_i[k] &= H_i(q,k)d[k] \\ &+ F_i(q,k)G(q,k)\hat{\mathbf{W}}_0(q,k)^{\mathrm{T}}\mathbf{H}(q,k)d[k] \\ &- H_i(q,k)G(q,k)\hat{\mathbf{W}}_0(q,k)^{\mathrm{T}}\mathbf{F}(q,k)d[k] \\ &+ G(q,k)\hat{\mathbf{W}}_0(q,k)^{\mathrm{T}}\mathbf{F}(q,k)m_i[k],\end{aligned} \quad (8)$$

for $i = 1, \ldots, M$, which is an autoregressive moving average (ARMA) model for the microphone signal $m_i[k]$. This means that every microphone signal $m_i[k]$ can also be represented as an IIR filtered version of the source signal $d[k]$ as

$$m_i[k] = \sum_{n=0}^{\infty} C_i[n,k]d[k-n], \quad (9)$$

where $C_i(q,k)$ is the corresponding IIR filter. This IIR filter can, akin to (3) - (4), be split into

$$C_{i,e}(q,k) = C_{i,e}[0,k] + \ldots + C_{i,e}[L_e - 1, k]q^{-L_e+1}, \quad (10)$$

$$C_{i,l}(q,k) = C_{i,l}[L_e,k]q^{-L_e} + \ldots, \quad (11)$$

where, ideally, $C_{i,e}(q,k)$ contains the early reflections and $C_{i,l}(q,k)$ contains both the late reverberation as well as the feedback component. This will hold true if the combined delay of $\hat{\mathbf{W}}_0(q,k)$, $G(q,k)$ and $\mathbf{F}(q,k)$ is sufficiently large. It should be noted that, as this condition concerns the combined delay, this does not necessarily impose any specific conditions solely on the (delay of the) feedback path $\mathbf{F}(q,k)$ itself. Indeed, the delay condition can be satisfied by $G(q,k)$ which is under control of the system designer. In practice the sequence of these three operations will oftentimes have a delay of approximately 20 ms [4] while typically the boundary between the direct path components or early reflections and the late reverberation lies between 8 - 80 ms [2, Ch. 2]. Therefore, if L_e is chosen sufficiently small, this condition will indeed be satisfied. It should also be noted that in practice it might be possible that the maximum stable gain (MSG) [1] can be increased even if not the entire feedback RIR is part of the late reverberation.

If in addition the IIR filters $C_i(q,k)$ can be reasonably approximated by FIR filters, it will be possible to apply DR algorithms, in particular inverse filtering-based ones [11], to cancel both the late reverberation as well as the feedback component. The simulation results in Section V will corroborate this finding.

IV. Dereverberation Algorithm

In the previous section it was shown that, under two mild conditions, it is possible to treat the joint DR and AFC problem as a DR-only problem. This means that in principle any DR algorithm can be used to perform joint DR and AFC. In this paper the weighted prediction-error (WPE) algorithm [8], [9] will be used. Since the intended application is AFC, a recursive algorithm will be used [8], [12]. Due to the fact that the RIRs might become long in PA applications, time-domain approaches might become prohibitively expensive. Therefore a short-time Fourier transform (STFT)-domain approach will

be used that employs the convolutive transfer function approximation (CTF) without crossband filters [13] as is common for the WPE algorithm [9], [12].

Because of this the time-domain filter $\hat{\mathbf{W}}_0(q,k)$ will be implemented as a sequence of an analysis filterbank, a frequency-domain filter and a synthesis filterbank. Let n and κ denote the frequency bin and frame indices, respectively. The DFT length used in the STFT is denoted by N.

In this method K previous frames are used to predict the late reverberation in the current frame. To prevent source signal cancellation, a lag $\Delta \in \mathbb{N}_{\geq 1}$ is inserted before frames are used for the prediction. This lag corresponds to a conversion of L_e samples to Δ frames [9]. Let $\mathbf{M}[n,\kappa] \in \mathbb{C}^M$ and $\hat{\mathbf{W}}_\Delta[n,\kappa] \in \mathbb{C}^{MK}$ be the STFT representation of $\mathbf{m}[k]$ and the WPE filter in frequency bin n at time frame κ. Furthermore, define $\mathbf{M}_\Delta[n,\kappa] \in \mathbb{C}^{MK}$ as

$$\begin{aligned}\mathbf{M}_\Delta[n,\kappa] = \\ \left[\mathbf{M}[n,\kappa-\Delta]^{\mathrm{T}} \cdots \mathbf{M}[n,\kappa-\Delta-K+1]^{\mathrm{T}}\right]^{\mathrm{T}}.\end{aligned} \tag{12}$$

For the recursive updating of the WPE filter an exponentially weighted recursive least squares (RLS) algorithm is used that additionally performs variance normalization [8], [12]. Let $\mathbf{\Phi}[n,\kappa] \in \mathbb{C}^{MK\times MK}$ be the inverse correlation matrix of $\mathbf{M}_\Delta[n,\kappa]$. Then the update equations for $\hat{\mathbf{W}}_\Delta[n,\kappa]$ are

$$e[n,\kappa] = M_1[n,\kappa] - \hat{\mathbf{W}}_\Delta[n,\kappa]^{\mathrm{H}}\mathbf{M}_\Delta[n,\kappa], \tag{13}$$

$$\begin{aligned}\mathbf{\Phi}[n,\kappa+1] = \frac{\mathbf{\Phi}[n,\kappa]}{\lambda} \\ -\frac{\mathbf{\Phi}[n,\kappa]\mathbf{M}_\Delta[n,\kappa]\mathbf{M}_\Delta[n,\kappa]^{\mathrm{H}}\mathbf{\Phi}[n,\kappa]}{\sigma_{n,\kappa}\lambda^2 + \lambda\mathbf{M}_\Delta[n,\kappa]^{\mathrm{H}}\mathbf{\Phi}[n,\kappa]\mathbf{M}_\Delta[n,\kappa]},\end{aligned} \tag{14}$$

$$\begin{aligned}\hat{\mathbf{W}}_\Delta[n,\kappa+1] = \hat{\mathbf{W}}_\Delta[n,\kappa] \\ +\frac{\mathbf{\Phi}[n,\kappa+1]}{\sigma_{n,\kappa}}\mathbf{M}_\Delta[n,\kappa]e[n,\kappa]^*,\end{aligned} \tag{15}$$

where $M_1[n,\kappa]$ is the STFT representation of the first microphone signal and $\sigma_{n,\kappa} = \mathbf{M}[n,\kappa]^{\mathrm{H}}\mathbf{M}[n,\kappa]/M$ is used as an estimate of the source power spectral density [12].

V. Simulation results

A. Acoustic scenarios

For the simulations, RIRs from the MYRiAD database [14] were used with a reverberation time of 0.5 s. Speech signals from the *CSTR-VCTK* corpus [15] were used as source signals. Each trial then consisted of a speech source emitting a 10 s signal from one speaker at a sampling frequency of 16 kHz to an array of 4 microphones in the room and another source playing back the loudspeaker signal. No measurement noise or interfering sources were used in the simulations. Futhermore, no additional delay in the forward path was added since the STFT processing already introduces a delay of N samples. The gain in the forward path g was defined as a gain margin (GM) with respect to the minimal MSG [1] of each of the individual loudspeaker-to-microphone RIRs of the system under study.

B. Algorithms

To asses the AFC performance of the WPE algorithm, it is compared to a pure AFC algorithm. For reasons that will be elaborated on in Section V-C, it is not possible to directly compare the dereverberation performance of WPE in scenarios with and without feedback.

For the pure AFC algorithm, a continuous adaptive filter (CAF) is used, which is a widely adopted AFC algorithm [3], [16]. It follows a system identification approach using the loudspeaker signal to predict the contribution of the feedback to the microphone signals. In order to enable a fair comparison with the WPE algorithm, the CAF is implemented as an STFT-domain filter making use of the CTF even though it was shown in [17] that time-domain DR algorithms may outperform their STFT-domain counterparts. The resulting algorithm is referred to as the continuous adaptive filter with convolutive transfer function approximation (CAF-CTF). Furthermore, since the CAF acts on each microphone signal separately, the CAF-CTF is applied to the single-input single-output (SISO) system consisting of the first microphone of the array and the loudspeaker to avoid requiring additional processing in the forward path.

Define $L[n,\kappa] \in \mathbb{C}$ and $\hat{\mathbf{W}}_{\mathrm{CAF}}[n,\kappa] \in \mathbb{C}^{L_{\mathrm{CAF}}}$ as the STFT representation of $l[k]$ and the corresponding CAF-CTF. Also define $\mathbf{L}_{\mathrm{CAF}}[n,\kappa] \in \mathbb{C}^{L_{\mathrm{CAF}}}$ as

$$\mathbf{L}_{\mathrm{CAF}}[n,\kappa] = \left[L[n,\kappa] \cdots L[n,\kappa-L_{\mathrm{CAF}}+1]\right]^{\mathrm{T}}. \tag{16}$$

Finally, define $\mathbf{\Psi}[n,\kappa] \in \mathbb{C}^{L_{\mathrm{CAF}}\times L_{\mathrm{CAF}}}$ as the inverse autocorrelation matrix of $\mathbf{L}_{\mathrm{CAF}}[n,\kappa]$. Since WPE makes use of an RLS-type updating [18, Ch. 10], a similar recursive algorithm for CAF-CTF is used, leading to the following update equations

$$e_{\mathrm{CAF}}[n,\kappa] = M_1[n,\kappa] - \hat{\mathbf{W}}_{\mathrm{CAF}}[n,\kappa]^{\mathrm{H}}\mathbf{L}_{\mathrm{CAF}}[n,\kappa], \tag{17}$$

$$\begin{aligned}\mathbf{\Psi}[n,\kappa+1] = \frac{\mathbf{\Psi}[n,\kappa]}{\lambda} \\ -\frac{\mathbf{\Psi}[n,\kappa]\mathbf{L}_{\mathrm{CAF}}[n,\kappa]\mathbf{L}_{\mathrm{CAF}}[n,\kappa]^{\mathrm{H}}\mathbf{\Psi}[n,\kappa]}{\alpha_{n,\kappa}\lambda^2 + \lambda\mathbf{L}_{\mathrm{CAF}}[n,\kappa]^{\mathrm{H}}\mathbf{\Psi}[n,\kappa]\mathbf{L}_{\mathrm{CAF}}[n,\kappa]},\end{aligned} \tag{18}$$

$$\begin{aligned}\hat{\mathbf{W}}_{\mathrm{CAF}}[n,\kappa+1] = \hat{\mathbf{W}}_{\mathrm{CAF}}[n,\kappa] \\ +\frac{\mathbf{\Psi}[n,\kappa+1]}{\alpha_{n,\kappa}}\mathbf{L}_{\mathrm{CAF}}[n,\kappa]e_{\mathrm{CAF}}[n,\kappa]^*.\end{aligned} \tag{19}$$

The parameter $\alpha_{n,\kappa}$ is introduced here to discriminate between two cases. The first one is obtained by setting $\alpha_{n,\kappa} = 1$ and leads to exponentially weighted RLS. The second sets $\alpha_{n,\kappa} = |M_1[n,\kappa]|^2$ to additionally perform a variance normalization similar to WPE, which is an approach that has already been applied to AFC [19], [20].

This leads to the following algorithms being compared:

1) CAF-CTF to gauge the AFC performance, no normalization, denoted "CAF-CTF",
2) CAF-CTF with normalization, denoted "nCAF-CTF".
3) WPE to assess the effectiveness of DR algorithms for joint DR and AFC, denoted "WPE",

The STFT processing made use of a DFT length $N = 256$ with 50% overlap, in line with the typical delay in the closed loop

of an AFC system [4]. For the analysis and synthesis windows a square-root Hann window was used. The exponentially weighted RLS made use of a forgetting factor $\lambda = 0.99$. For WPE, K and Δ were set to 7 and 1, respectively. These parameters were chosen based on preliminary experiments. In order to compare the two methods with an equal temporal span, L_{CAF} was set to 8.

Since both WPE and the (n)CAF-CTF are making use of RLS, the computational complexity for a filter of length N is identical, namely $\mathcal{O}(N^2)$ [18, Ch. 11]. However, due to WPE being a multichannel method, $N = MK$ whereas $N = L_{\mathrm{CAF}}$ for the (n)CAF-CTF.

C. Metrics

As mentioned in Section III, the goal of joint DR and AFC is to only retain the direct path and early reflections while suppressing the contributions of both the late reverberation and feedback signal. This means that for WPE the output after filtering the microphone signals can be written as

$$\hat{s}_{e,1} = s_{e,1} + s_{l,1} + F_1 l - \hat{\mathbf{W}}_{0,\mathrm{P}}^{\mathrm{T}} \mathbf{m}, \tag{20}$$

where q and k have been omitted for the sake of conciseness. Using the same notation as in Section II, the filter $\hat{\mathbf{W}}_{0,\mathrm{P}}(q,k)$ is the time-domain equivalent of the STFT-domain prediction filter $\hat{\mathbf{W}}_{\Delta}[n,\kappa]$. As mentioned before, in WPE the delay Δ is introduced to avoid source signal cancellation meaning the prediction should leave $s_{e,1}$ intact [9]. The residual $s_{l,1} + F_1 l - \hat{\mathbf{W}}_{0,\mathrm{P}}^{\mathrm{T}} \mathbf{m}$ can therefore be considered as interference to the desired signal $s_{e,1}$, allowing to define a signal-to-interference ratio (SIR) metric as

$$\mathrm{SIR}\ [\mathrm{dB}] = 10 \log_{10} \frac{|s_{e,1}|^2}{|s_{l,1} + F_1 l - \hat{\mathbf{W}}_{0,\mathrm{P}}^{\mathrm{T}} \mathbf{m}|^2}, \tag{21}$$

where q and k have again been omitted for the sake of conciseness. For the CAF-CTF a similar reasoning can be applied by replacing $\hat{\mathbf{W}}_{0,\mathrm{P}}(q,k)^{\mathrm{T}} \mathbf{m}[k]$ with $\hat{W}_{\mathrm{CAF}}(q,k) l[k]$ where $\hat{W}_{\mathrm{CAF}}(q,k)$ is the time-domain equivalent of $\hat{\mathbf{W}}_{\mathrm{CAF}}[n,\kappa]$. It should be noted that due to the correlation between the different signal components in the delayed $\mathbf{m}[k]$ and the current late reflections it is not possible to split $\hat{\mathbf{W}}_{0,\mathrm{P}}(q,k)^{\mathrm{T}} \mathbf{m}[k]$ into constituent parts which would allow to assess the DR and AFC performance individually.

To quantify the performance improvement, first the output without processing in the loop is computed. For WPE this corresponds to setting $\hat{\mathbf{W}}_{\Delta} = \mathbf{0} = [0 \cdots 0]^{\mathrm{T}}$. Similarly, for the CAF-CTF this corresponds to $\hat{\mathbf{W}}_{\mathrm{CAF}} = \mathbf{0}$. Both of these cases are equivalent to the SISO system consisting of the first microphone and the loudspeaker where the same delay as for the STFT processing is introduced in the forward path.

The split between $H_{i,e}(q,k)$ and $H_{i,l}(q,k)$, L_e, was set to $N/2$ samples in correspondence with the choice of $\Delta = 1$ frame. This is in line with the boundaries for L_e given in Section III.

To assess the intelligibility and quality of the signals the cepstral distance (CD) [21] and eSTOI [22] are used, respectively. The CD computes the mean squared distance between the cepstra of short time frames of a clean reference signal and the processed signal, where lower is better. The eSTOI predicts the intelligibility of the signal based on a clean reference signal and the processed signal and returns a number between zero and one, one being the most intelligible. The reference signal is the contribution of the early reflections to the microphone signals while the processed signal is obtained through the inverse STFT (ISTFT) of the error signal from (13) and (17).

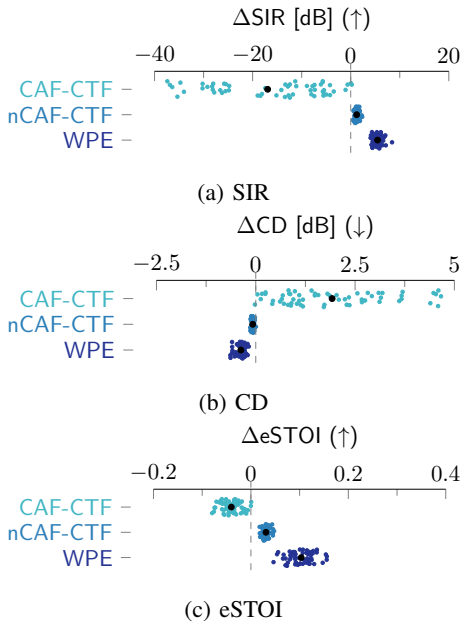

(a) SIR

(b) CD

(c) eSTOI

Fig. 2: Performance delta when processing in the loop, WPE outperforms the CAF-CTF on all considered metrics. In addition, variance normalization makes a significant difference for the latter.

D. Discussion

In Fig. 2 the three metrics discussed in the previous subsection are shown for a set of scenarios with a GM of 6 dB. Fig. 2a shows an improvement in SIR for WPE indicating that, indeed, it manages to perform joint DR and AFC. Fig. 2b and Fig. 2c indicate that this also results in higher quality, more intelligible output as evidenced by a decrease in CD and increase in eSTOI. In addition, all metrics in Fig. 2 indicate that WPE outperforms the (n)CAF-CTF since the increase in SIR and eSTOI and the decrease in CD obtained when using WPE is larger than that when using the (n)CAF-CTF.

The poor performance of the regular CAF-CTF can probably be explained as follows. First, since the loudspeaker signal and microphone signals are correlated, there will be a residual bias in the filter estimation [3]. Second, since $L_{CAF} = 8$, the temporal span of the filter is 1152 samples which is shorter than the length of the RIR, causing undermodeling [23]. Furthermore, comparing the nCAF-CTF to its regular counterpart suggests that the normalization makes a significant difference for both interference suppression as well as the quality and intelligibility of the output.

The findings from Fig. 2 suggest that there is little benefit in using the CAF-CTF for stable systems. However, when repeating the experiments of Fig. 2 with a GM of -6 dB Fig. 3 is obtained, showing that the CAF-CTF also manages to perform AFC in that case. It is also worth pointing out that the WPE still significantly outperforms the (n)CAF-CTF.

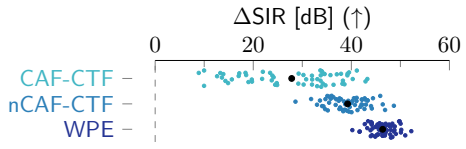

Fig. 3: ΔSIR for -6 dB GM, showing that the CAF-CTF manages to perform AFC for unstable systems, but is still outperformed by WPE.

VI. Conclusions

In this paper, it has been shown that under two assumptions acoustic feedback can be considered as a form of reverberation. First, the feedback loop should contain sufficient delay such that the feedback signal can be considered as part of the late reverberation, a condition that will typically be satisfied. Second, the IIR filter that can be used to represent the loop transfer function should be reasonably approximated by an FIR filter, a requirement necessary to implement inverse filtering-based DR algorithms. If these two conditions are satisfied, it is possible to apply DR algorithms for AFC. Experimental results corroborate this finding: when comparing WPE, an established DR algorithm, to the (n)CAF-CTF, an established AFC algorithm, with an equal temporal span, WPE offers a better performance in terms of SIR, quality measured through CD and intelligibility measured through eSTOI.

References

[1] T. Van Waterschoot and M. Moonen, "Fifty Years of Acoustic Feedback Control: State of the Art and Future Challenges," *Proc. IEEE*, vol. 99, no. 2, pp. 288–327, Feb. 2011.

[2] P. A. Naylor and N. D. Gaubitch, Eds., *Speech Dereverberation* (Signals and Communication Technology). London: Springer London, 2010.

[3] A. Spriet, I. Proudler, M. Moonen, and J. Wouters, "Adaptive Feedback Cancellation in Hearing Aids with Linear Prediction of the Desired Signal," *IEEE Trans. Signal Process.*, vol. 53, no. 10, pp. 3749–3763, Oct. 2005.

[4] G. Rombouts, T. Van Waterschoot, K. Struyve, and M. Moonen, "Acoustic Feedback Cancellation for Long Acoustic Paths Using a Nonstationary Source Model," *IEEE Trans. Signal Process.*, vol. 54, no. 9, pp. 3426–3434, Sep. 2006.

[5] X. Zhan, F. Hao, X. Li, and C. Zheng, "DeepPEM-AFC: An Improved Prediction-Error-Method-based Adaptive Feedback Cancellation with Deep Learning for Hearing Aids," in *Proc. 2025 IEEE Int. Conf. Acoust. Speech Signal Process. (ICASSP)*, Hyderabad, India: IEEE, Apr. 6, 2025, pp. 1–5.

[6] C. Zheng, M. Wang, X. Li, and B. C. J. Moore, "A Deep Learning Solution to the Marginal Stability Problems of Acoustic Feedback Systems for Hearing Aids," *J. Acoust. Soc. Am.*, vol. 152, no. 6, pp. 3616–3634, Dec. 1, 2022.

[7] M. Delcroix, T. Hikichi, and M. Miyoshi, "Precise Dereverberation Using Multichannel Linear Prediction," *IEEE Trans. Audio Speech Lang. Process.*, vol. 15, no. 2, pp. 430–440, Feb. 2007.

[8] T. Yoshioka, H. Tachibana, T. Nakatani, and M. Miyoshi, "Adaptive Dereverberation of Speech Signals with Speaker-Position Change Detection," in *Proc. 2009 IEEE Int. Conf. Acoust. Speech Signal Process. (ICASSP)*, Taipei, Taiwan: IEEE, Apr. 2009, pp. 3733–3736.

[9] T. Nakatani, T. Yoshioka, K. Kinoshita, M. Miyoshi, and Biing-Hwang Juang, "Speech Dereverberation Based on Variance-Normalized Delayed Linear Prediction," *IEEE Trans. Audio Speech Lang. Process.*, vol. 18, no. 7, pp. 1717–1731, Sep. 2010.

[10] B. Liekens, *Integrated-afc-dr*, Feb. 12, 2026. [Online]. Available: https://github.com/BasilLiekens/integrated-afc-dr.

[11] M. Miyoshi and Y. Kaneda, "Inverse Filtering of Room Acoustics," *IEEE Trans. Acoust. Speech Signal Process.*, vol. 36, no. 2, pp. 145–152, Feb. 1988.

[12] L. Drude, J. Heymann, C. Boeddeker, and R. Haeb-Umbach, "NARA-WPE: A Python Package for Weighted Prediction Error Dereverberation in Numpy and Tensorflow for Online and Offline Processing," in *Speech Commun.; 13th ITG-Symp.*, Oldenburg Germany, Oct. 2018, pp. 1–5.

[13] Y. Avargel and I. Cohen, "System Identification in the Short-Time Fourier Transform Domain With Crossband Filtering," *IEEE Trans. Audio Speech Lang. Process.*, vol. 15, no. 4, pp. 1305–1319, May 2007.

[14] T. Dietzen, R. Ali, M. Taseska, and T. Van Waterschoot, "MYRiAD: A Multi-Array Room Acoustic Database," *J Audio Speech Music Process.*, vol. 2023, no. 1, p. 17, Apr. 26, 2023.

[15] J. Yamagishi, C. Veaux, and K. MacDonald, *CSTR VCTK Corpus: English Multi-speaker Corpus for CSTR Voice Cloning Toolkit*, version 0.92, Nov. 2019. [Online]. Available: https://datashare.ed.ac.uk/handle/10283/3443.

[16] M. Guo, S. H. Jensen, and J. Jensen, "Evaluation of State-of-the-Art Acoustic Feedback Cancellation Systems for Hearing Aids," *J. Audio Eng. Soc.*, vol. 61, pp. 125–137, 2013.

[17] T. Dietzen, A. Spriet, W. Tirry, S. Doclo, M. Moonen, and T. Van Waterschoot, "Comparative Analysis of Generalized Sidelobe Cancellation and Multi-Channel Linear Prediction for Speech Dereverberation and Noise Reduction," *IEEE/ACM Trans. Audio Speech Lang. Process.*, vol. 27, no. 3, pp. 544–558, Mar. 2019.

[18] S. S. Haykin, *Adaptive Filter Theory*, 5. ed. Upper Saddle River, NJ: Pearson, 2014.

[19] T. Van Waterschoot, G. Rombouts, and M. Moonen, "Dually Regularized Recursive Prediction Error Identification for Acoustic Feedback and Echo Cancellation," in *Proc. 2007 15th Eur. Signal Process. Conf. (EUSIPCO)*, Poznan, Poland, Sep. 2007, pp. 1610–1614.

[20] J. M. Gil-Cacho, T. van Waterschoot, M. Moonen, and S. H. Jensen, "Transform Domain Prediction Error Method for Improved Acoustic Echo and Feedback Cancellation," in *Proc. 2012 20th Eur. Signal Process. Conf. (EUSIPCO)*, Bucharest, Romania, Aug. 2012, pp. 2422–2426.

[21] K. Kinoshita, M. Delcroix, S. Gannot, *et al.*, "A Summary of the REVERB Challenge: State-of-the-Art and Remaining Challenges in Reverberant Speech Processing Research," *EURASIP J. Adv. Signal Process.*, vol. 2016, no. 7, 2016.

[22] J. Jensen and C. H. Taal, "An Algorithm for Predicting the Intelligibility of Speech Masked by Modulated Noise Maskers," *IEEE/ACM Trans. Audio Speech Lang. Process.*, vol. 24, no. 11, pp. 2009–2022, Nov. 2016.

[23] G. Rombouts, T. van Waterschoot, K. Struyve, P. Verhoeve, and M. Moonen, "Identification of Undermodelled Room Impulse Responses," in *Proc. 2005 Int. Workshop Acoust. Echo Noise Control (IWAENC)*, Eindhoven, the Netherlands, Sep. 2005, pp. 153–156.