COMBINING PER TONE EQUALIZATION AND WINDOWING IN DMT RECEIVERS

G. Cuypers[*]*, G. Ysebaert, M. Moonen*

Katholieke Universiteit Leuven - ESAT-SISTA
Kasteelpark Arenberg 10
B-3001 Leuven-Heverlee - Belgium
{cuypers, ysebaert, moonen}@esat.kuleuven.ac.be

P. Vandaele

Access to Networks
ALCATEL
2018 Antwerpen, Belgium
piet.vandaele@alcatel.be

ABSTRACT

A novel equalization technique for Discrete multitone (DMT) based modems is proposed which incorporates receiver windowing operations. The method is especially useful in an environment dominated by crosstalk and narrowband interference, such as digital subscriber line (DSL). The high sidelobe level of the DFT filters present in classical DMT receivers leads to considerable performance degradation due to intercarrier interference and broadband susceptibility to narrowband disturbers. Window functions can be used to alleviate this, but they are difficult to combine with equalization techniques, e.g. per tone equalization [1]. The presented method offers a way to do so without unduly increasing the complexity.

1. INTRODUCTION

Discrete multitone (DMT) modulation divides the available bandwidth over several carriers that are individually QAM modulated by means of an IFFT. A cyclic prefix (CP) is added to each symbol. If the channel impulse response length does not exceed the CP length, recovery can be done easily by means of an FFT and equalizing the channel by means of a 1-tap frequency domain equalizer (FEQ) for each tone. In case the channel length exceeds the cyclic prefix, intersymbol interference (ISI) and intercarrier interference (ICI) result ([2], [3]). To avoid the overhead resulting from long prefixes, this structure is usually preceded by a T-taps time domain equalizer (TEQ) such that the convolution of channel and TEQ is sufficiently short.

Alternatively, a *per tone equalizer* (PTEQ) can be used, which has a T-taps FEQ for each tone individually, hence maximizing the SNR on each tone separately [1]. In the presence of radio frequency interference (RFI) or bridged taps the PTEQ shows a significant performance improvement compared to the existing TEQ solution.

Indeed, apart from the channel distortion, DMT transmission is also impaired by white noise, RFI (emerging from AM broadcast and HAM radio) and crosstalk ([4], [5]). It is well-known that window functions can have a beneficial effect on the sidelobe behaviour. However, if the window is limited to the DMT symbol, the windowing itself leads to the loss of orthogonality [6]. One can either take this into account [7] or avoid it alltogether by extending the window beyond the boundary of the symbol, but still within a cyclic extension. Because these window functions render the demodulator more spectrally contained, they help counter NEXT and RFI.

A PTEQ can behave as a window function, but only to counter disturbances present during equalizer training. To combat RFI emerging after training, a combination of PTEQ and a fixed time window is needed. A previous method to implement this was successful, but had a rather high increase in computational complexity [8].

In section 2 we introduce a new receiver structure, where per tone equalization and windowing operations are combined in a computational efficient scheme. Section 3 shows simulation results. Finally, in section 4 conclusions will be given.

2. PER TONE EQUALIZATION WITH WINDOWING

Assume a DMT system with DFT size N, and tones $i \in [0, \frac{N}{2}-1]$, carrying the frequency-domain information $X_i^{(k)}$ at time k. The data model is adopted from [1]. A window of length $N+\mu$ is applied to the incoming samples, and a T-taps equalizer $\bar{\mathbf{w}}_i$ is used for each tone i individually. The received time domain samples are denoted as y and are grouped in a column vector $\mathbf{y}^{(k)}$ of length $\mu+N+T-1$:

$$\mathbf{y}^{(k)} = \left[\begin{array}{ccc} y_k & \cdots & y_{k+N+T+\mu-2} \end{array} \right]^T.$$

[*] Gert Cuypers is a Research Assistant with the I.W.T. This research work was carried out at the ESAT laboratory of the Katholieke Universiteit Leuven, in the framework of the Concerted Research Action GOA-MEFISTO-666 (Mathematical Engineering for Information and Communication Systems Technology) of the Flemish Government, and IUAP P4-02 (1997-2001) 'Modeling, Identification, Simulation and Control of Complex Systems', and was partially funded by Alcatel-Bell Antwerp. The scientific responsibility is assumed by its authors.

For the derivation assume a window

$$\left[\begin{array}{ccccccccc} b_0 & b_1 & \cdots & b_{\mu-1} & 1 & \cdots & 1 & b_\mu & \cdots & b_{2\mu-1} \end{array}\right],$$

with $b_{\mu-1} = 1$, and $b_{2\mu-1} = 0$, and for which the following symmetry condition applies:

$$(b_x - b_{x-1}) \equiv -(b_{x+\mu} - b_{x+\mu-1}), \text{ for } x \in [1, \mu-1]. \quad (1)$$

For each tone i, the T-taps per tone equalizer $\bar{\mathbf{w}}_i$ is determined from the following cost function:

$$\min_{\bar{\mathbf{w}}_i} J(\bar{\mathbf{w}}_i) = \min_{\bar{\mathbf{w}}_i} \mathcal{E}\left\{\left|\bar{\mathbf{w}}_i^{\mathrm{T}}\mathbf{F}_i\mathbf{y}^{(k)} - X_i^{(k)}\right|^2\right\}, \text{ with} \quad (2)$$

$$\mathbf{F}_i = \left[\begin{array}{ccc} \boxed{\mathcal{F}_{win}(i,:)} & \cdots & 0 \\ \ddots & \ddots & \\ 0 \quad \cdots & \boxed{\mathcal{F}_{win}(i,:)} & \end{array}\right],$$

$$\mathcal{F}_{win}(i,:) = \left[\begin{array}{cccccc} b_0 & b_1\alpha_i & \cdots & b_{\mu-1}\alpha_i^{\mu-1} & \alpha_i^{\mu} & \cdots \\ \alpha_i^{N-1} & b_\mu\alpha_i^{N} & \cdots & b_{2\mu-1}\alpha_i^{\mu+N-1} & & \end{array}\right],$$

$$\alpha_i = e^{\frac{-j2\pi(i-1)}{N}}$$

The vector $\mathcal{F}_{win}(i,:)$ corresponds to a combination of a windowing operation, folding (to length N) and pointwise multiplication with the ith row of the DFT matrix. (The *bar* on $\bar{\mathbf{w}}_i$ has been kept to keep the notation compatible to [1]). From (2), it looks as if a T taps equalizer requires the computation of T complete (windowed) DFTs at the symbol rate. However, we will show how the matrix $\mathbf{F}_i$ can be rewritten in a simpler form. Indeed, apart from the part corresponding to the window taper, there is a simple relationship between the elements in matrix $\mathbf{F}_i$, that was exploited in the PTEQ [1]. We will extend this for the tapered parts, such that only one DFT needs to be calculated, and the others can be derived from this one and some correction terms.

Define the differences of the window as:

$$D_{win} = \left[\begin{array}{cccc} d_0 & d_1 & \ldots & d_{\mu-1} \end{array}\right],$$

$$d_x = \left\{\begin{array}{ll} b_0 & x = 0 \\ b_x - b_{x-1} & 1 \le x \le \mu - 1 \end{array}\right.$$

and, for tone i, the modulated differences as

$$D_{win_i} = \left[\begin{array}{cccc} d_0 & d_1\alpha_i & \cdots & d_{\mu-1}\alpha_i^{\mu-1} \end{array}\right].$$

If we define

$$\mathbf{P}_i = \begin{bmatrix} 1 & \alpha_i & \ldots & \alpha_i{}^{(T-1)} \\ 0 & 1 & \ddots & \ddots \\ \vdots & \ddots & \ddots & \alpha_i \\ 0 & \ldots & 0 & 1 \end{bmatrix}, \text{ and}$$

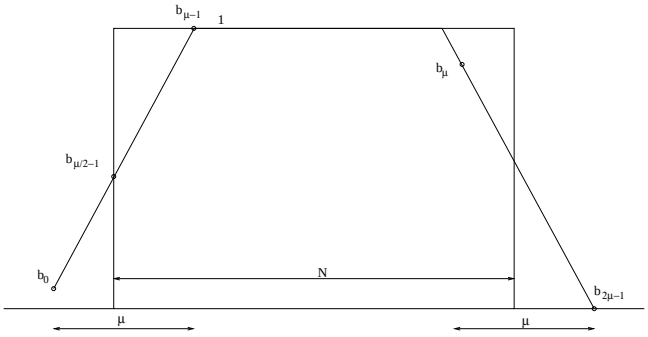

Fig. 1. Trapezoidal window

$$\mathbf{M}_i = \left[\begin{array}{ccccccccc} \boxed{D_{win_i}} & 0 & \cdots & 0 & \boxed{\text{-}D_{win_i}} & & \cdots & & 0 \\ & \ddots & & & & \ddots & & & \\ 0 & \cdots & \boxed{D_{win_i}} & 0 & \cdots & 0 & \boxed{\text{-}D_{win_i}} & & 0 \\ 0 & \cdots & & & \boxed{\mathcal{F}_{win}(i,:)} & & & & \end{array}\right],$$

then the matrix $\mathbf{F}_i$ can be rewritten as

$$\mathbf{F}_i = \mathbf{P}_i\mathbf{M}_i. \quad (3)$$

Now we can substitute $\bar{\mathbf{w}}_i^{\mathrm{T}}$ by $\bar{\mathbf{v}}_i^{\mathrm{T}}$, defined as $\bar{\mathbf{v}}_i^{\mathrm{T}} = \bar{\mathbf{w}}_i^{\mathrm{T}} \cdot \mathbf{P}_i$, such that (2) can be rewritten as a function of $\bar{\mathbf{v}}_i$

$$\min_{\bar{\mathbf{v}}_i} J(\bar{\mathbf{v}}_i) = \min_{\bar{\mathbf{v}}_i} \mathcal{E}\left\{\left|\bar{\mathbf{v}}_i^{\mathrm{T}}\mathbf{M}_i\mathbf{y}^{(k)} - X_i^{(k)}\right|^2\right\} \quad (4)$$

To simplify $\bar{\mathbf{v}}_i^{\mathrm{T}}\mathbf{M}_i\mathbf{y}^{(k)}$, consider the part related to the first $T-1$ elements of $\bar{\mathbf{v}}_i^{\mathrm{T}}$, and define $\bar{\mathbf{u}}_i = \bar{\mathbf{v}}_i(1:T-1)$. Hence we can write:

$$\bar{\mathbf{u}}_i^{\mathrm{T}} \left[\begin{array}{ccc} \boxed{D_{win_i}} & \cdots & 0 \\ \ddots & \ddots & \\ 0 \quad \cdots & \boxed{D_{win_i}} & \end{array}\right] \underbrace{\left[\begin{array}{c|c|c|c} I & \mathbf{O} & -I & 0 \end{array}\right]\mathbf{y}^{(k)}}_{\boldsymbol{\Delta}}, \quad (5)$$

which also defines the matrix $\boldsymbol{\Delta} = [\Delta_k \ldots \Delta_{k+T+\mu-3}]^T$ of difference terms $\Delta_x = (y_x - y_{x+N})$.

For some windows, (5) can be further simplified, e.g. in case of a *trapezoidal* window, with:

$$b_x = \left\{\begin{array}{ll} \frac{x+1}{\mu} & 0 \le x \le (\mu-1) \\ \frac{2\mu-x-1}{\mu} & \mu \le x \le (2\mu-1) \end{array}\right. ,$$

which is depicted in figure 1. Note that, because of the constant slope at the window edge, all differences d_x are equal to μ^{-1}, and thus the modulated differences are equal to a scaled version of the first μ elements of the ith row of the DFT-matrix. We can substitute this explicitely, such that (5) becomes:

$$\frac{\bar{\mathbf{u}}_i^{\mathrm{T}}}{\mu} \left[\begin{array}{ccc} \boxed{\mathcal{F}_{win}(i,1:\mu)} & \cdots & 0 \\ \ddots & \ddots & \\ 0 \quad \cdots & \boxed{\mathcal{F}_{win}(i,1:\mu)} & \end{array}\right] \left[\begin{array}{c} \Delta_k \\ \Delta_{k+1} \\ \vdots \\ \Delta_{k+T+\mu-3} \end{array}\right] \quad (6)$$

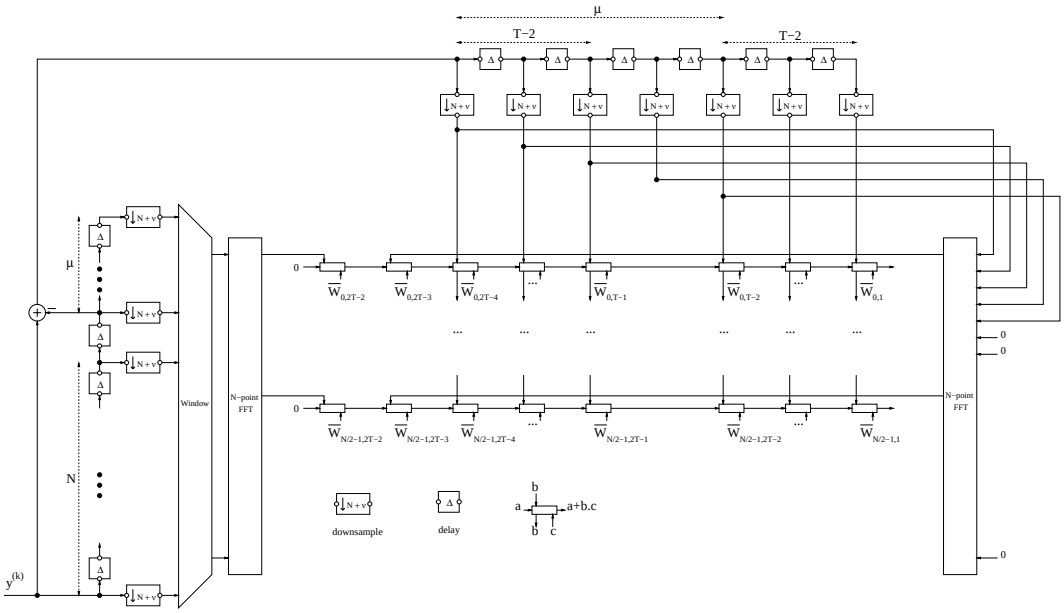

Fig. 2. Signal flow graph. Note that $\bar{w}_{i,m}$ denotes the mth element of the equalizator $\bar{\mathbf{w}}_{i,u}$ for tone i

Instead of computing all these DFTs in full, one can also perform the DFT on the last row only, and derive the others by making use of this one DFT and some correction terms, similar to, but slightly different from (3). For a row x and a tone i, we can write that:

$$row(x-1).\mathbf{\Delta} = row(x).\alpha_i.\mathbf{\Delta} \underbrace{+\Delta_{k+x-2} - \Delta_{k+\mu+x-2}.\alpha_i^{\mu}}_{\text{correction term}}$$

By recursing this formula, all DFT-outputs at tone i can be replaced by the DFT output of the last row only and all needed correction terms. Unfortunately, these correction terms are tone-dependent, such that they cannot be processed for all tones together, as could be done with the PTEQ. It might be computationally more interesting to break them into common terms (Δ_x's). In matrix form, the new optimization criterion can be represented as follows:

$$\min_{\bar{\mathbf{w}}_{i,u}} J(\bar{\mathbf{w}}_{i,u}) = \min_{\bar{\mathbf{w}}_{i,u}} \mathcal{E}\left\{ \left| \bar{\mathbf{w}}_{i,u}^{\mathrm{T}} \mathbf{F}_{i,u} \mathbf{y}^{(k)} - X_i^{(k)} \right|^2 \right\}, \text{ with} \tag{7}$$

$$\mathbf{F}_{i,u} = \begin{bmatrix} \mathrm{I}_{T-2} & \mathrm{O}_{T-2,N-T+2} & \text{-}\mathrm{I}_{T-2} & \mathrm{O}_{T-2,\mu} & \mathrm{O}_{T-2,1} \\ \mathrm{O}_{T-2,\mu} & \mathrm{I}_{T-2} & \mathrm{O}_{T-2,N-T+2} & \text{-}\mathrm{I}_{T-2} & \mathrm{O}_{T-2,1} \\ 0 \quad \cdots & \boxed{\mathcal{F}_{win}(i,1:\mu)} & \cdots & \boxed{\text{-}\mathcal{F}_{win}(i,1:\mu)} & 0 \\ 0 \quad \cdots & \multicolumn{3}{c}{\boxed{\mathcal{F}_{win}(i,:)}} & \end{bmatrix}.$$

The rows (from bottom to top) correspond to the original windowed DFT output, that has been omitted in the transition from (4) to (5), the DFT corresponding to the last row in (6), and the $2(T-2)$ Δ_x's needed to compute the other (sliding) DFT's from (6), Δ_k,... Δ_{k+T-3}, $\Delta_{k+\mu}$,... $\Delta_{k+T+\mu-3}$. The indices u are added because the original equation (2) can be viewed as a *constrained* version of the *unconstrained* optimization problem of (7). If one denotes the number of rows in matrix $\mathbf{F}_{i,u}$ as T_u, the following relationship holds:

$$T_u = 2(T-2) + 2 = 2T - 2.$$

This implies that the amount of taps needed roughly doubles. Nonetheless, the complexity is still lower compared to the original problem from (2), because the calculation of the T DFTs can be avoided. In comparison to a previous implementation [8], the method is attractive in the most common case that $T \ll \mu$.

A signal flow graph of this scheme is shown in fig. 2. In summary, for each tone i, the optimal equalization is determined by

- the ith output of the windowed DFT of the received symbol
- the ith output of the DFT of a vector of difference terms $\left[\begin{array}{cccccc} \Delta_k & \ldots & \Delta_{k+\mu-1} & 0 & \ldots & 0 \end{array} \right]$ (completed with zeroes)
- difference terms $\Delta_k \ldots \Delta_{k+T-3}, \Delta_{k+\mu} \ldots \Delta_{k+T+\mu-3}$.

As stated before, (7) corresponds to the *unconstrained* version of (2). The latter can be derived from the former by premultiplication of the matrix $\mathbf{F}_{i,u}$ by a *constraint matrix* $\mathbf{C}_i$:

$$\mathbf{C}_i = \left[\begin{array}{c|c|c} \mathbf{I}_{T-2} & -\alpha_i^{\mu}.\mathbf{I}_{T-2} & \mathbf{O}_2 \\ \hline \mathbf{O}_{2,T-2} & \mathbf{O}_{2,T-2} & \mathbf{I}_2 \end{array} \right],$$

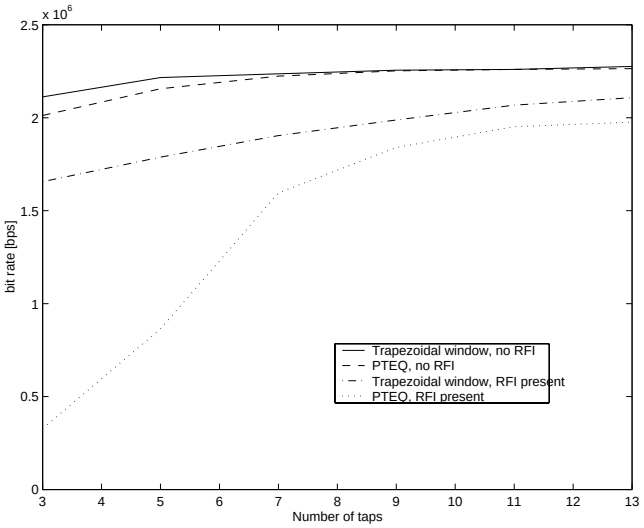

Fig. 3. Comparison between PTEQ and the new method in absence and presence of RFI

i.e. $\mathbf{F}_i$ and $\mathbf{C}_i\mathbf{F}_{i,u}$ span the same row space, and optimisation using either one of these matrices will yield the same result. Obviously, enforcing the constraint will reduce the number of taps needed, at the cost of being stuck with tone-dependent correction terms.

3. SIMULATION RESULTS

Simulations have been done for an Asymmetric DSL (ADSL) system, using a standard loop T1.601#13 with NEXT from 24 DSL sources, and RFI present as indicated in table 1, rendering the energy in a 4312.5Hz ADSL band. Notice that the last RFI interferer was originally located at 1900kHz, but appears at 308kHz due to aliasing. The used tones are from tone 38 up to tone 256. The symbol size N is 512 and the prefix length is 32.

620	740	800	980	1100	1160	308
-92.2	-90.5	-59.9	-59.6	-95.5	-79.8	-112.7

Table 1. Nominal RFI frequencies [kHz] and power levels [dBm/4312.5Hz band]

The presented method, making use of the compression with the constraint matrix and a window extension $\mu = 16$, is compared with the PTEQ of [1]. Figure 3 shows the bit rate for both equalization techniques, in the absence and presence of RFI interference. As could be expected, in the absence of RFI, the gain is negligible. If RFI is present however, the proposed method performs significantly better than the PTEQ. As the number of taps increases, the difference becomes smaller.

4. CONCLUSIONS

A new method for combining windowing and per tone equalization has been presented. The windowing operation remains unaltered and is executed prior to the FFT at the receiver side. A T-taps per tone equalizer is eventually transformed into an equivalent $(2T-2)$-taps equalizer. The inputs for this equalizer are determined from two N-point FFT's and $2(T-2)$ real difference terms. In the presence of RFI interference, the presented method shows a significant performance inprovement as compared to the PTEQ, especially for low numbers of taps.

5. REFERENCES

[1] K. Van Acker et al., "Per tone equalization for dmt-based systems," *IEEE transactions on communications*, vol. 49, no. 1, pp. 109 –119, 2001.

[2] T. Pollet, H. Steendam, and M. Moeneclaey, "Performance degradation of multi-carrier systems caused by an insufficient guard interval duration," in *Proc. Int. Workshop on Copper Wire Access Systems 'Bridging the Last Copper Drop' (CWAS97)*, 1997, pp. 265–270.

[3] J.L. Seoane, S.K. Wilson, and S. Gelfand, "Analysis of intertone and interblock interference in ofdm when the length of the cp is shorter than the length of the impulse response of the channel," in *Proc. Globecom '97*, 1997, pp. 32–36.

[4] J.W. Cook, R.H. Kirkby, M.G. Booth, and K.T. Foster, "The noise and crosstalk environment for adsl and vdsl systems," *IEEE Communications Magazine*, vol. 37, no. 5, pp. 73–78, 1999.

[5] L. De Clercq, M. Peeters, S. Schelstraete, and T. Pollet, "Mitigation of radio interference in xdsl transmission," *IEEE Communications Magazine*, vol. 38, no. 3, pp. 168 –173, 2000.

[6] P. Spruyt, P. Reussens, and S. Braet, "Performance of improved smt transceiver for vdsl," in *ANSI Contribution T1E1.4/96-104*, April 1996.

[7] S. Kapoor and S. Nedic, "Interference suppression in dmt receivers using windowing," in *Proc. ICC*, 2000, pp. 778–782.

[8] K. Van Acker, T. Pollet, G. Leus, and M. Moonen, "Combination of per tone equalization and windowing in dmt-receivers," in *Proc. of the Fifth Bayona Workshop on Emerging Technologies in Telecommunications*, 1999, pp. 49–53.