Joint Adaptive Compensation of Transmitter and Receiver IQ Imbalance Under Carrier Frequency Offset in OFDM-Based Systems

Deepaknath Tandur, *Student Member, IEEE*, and Marc Moonen, *Fellow, IEEE*

***Abstract*—Zero-intermediate frequency (IF)-based orthogonal frequency division multiplexing (OFDM) transmitters and receivers are gaining a lot of interest because of their potential to enable low-cost terminals. However, such systems suffer from front-end impairments such as in-phase/quadrature-phase (IQ) imbalance which may have a huge impact on the performance. Moreover, since OFDM is very sensitive to a carrier frequency offset, this distortion needs to be taken into account in the derivation and analysis of any IQ imbalance estimation/compensation scheme. In this paper, the effect of both transmitter and receiver IQ imbalance under carrier frequency offset in an OFDM system is studied and an algorithm is developed to compensate for such distortions in the digital domain. The algorithm involved is a very efficient post-FFT adaptive equalization which is shown to lead to near ideal compensation.**

***Index Terms*—Adaptive compensation algorithms, analog impairments, carrier frequency offset (CFO), direct-conversion, in-phase/quadrature-phase (IQ) imbalance, orthogonal frequency division multiplexing (OFDM).**

I. Introduction

ORTHOGONAL frequency division multiplexing (OFDM) [1] is a standardized technique for broadband wireless systems. It is used for wireless LAN [2], [3], fixed broadband wireless access [4], digital video and audio broadcasting [5], [6], etc.

Traditionally, OFDM systems employ a superheterodyne architecture to convert the baseband signal to a radio frequency (RF) signal and vice versa. Fig. 1 shows a block diagram of a superheterodyne receiver front-end. It converts the RF signal down to digital baseband in several steps, passing via intermediate frequencies (IFs). At each analog IF, filtering by means of band-pass filters (BPF) or low-pass filters (LPF) and amplification by means of low-noise amplifier (LNA) or variable gain amplifier (VGA) are applied to maintain good selectivity and sensitivity. The drawback of this architecture, however, is that it requires a lot of components to reach this good signal quality. At each analog IF, the filters and the amplifier all add to the component cost. Not only are they quite expensive components, but as they are external, they also add to the assembling cost.

An alternative to the superheterodyne architecture is the zero-IF architecture (or direct-conversion architecture) shown in Fig. 2. As the name suggests, the zero-IF architecture converts the RF signal directly to baseband or vice versa without any IFs. This clearly results in a lower component count and consequently a lower cost. The zero-IF architecture enables an easier integration and leads to a smaller form factor.

However, there are also drawbacks in using a zero-IF architecture. In a superheterodyne architecture, the IQ modulation and demodulation is performed in the digital domain resulting in perfect IQ separation. On the other hand, the zero-IF architecture performs IQ modulation and demodulation in the analog domain. As a result, the matching between the analog I and Q paths and their components are imperfect. This leads to IQ imbalance distortion which significantly degrades the signal quality.

Rather than decreasing the IQ imbalance by increasing the design time and the component cost, IQ imbalance can also be tolerated and then compensated digitally. Along with IQ imbalance, OFDM systems are also very sensitive to carrier frequency offset (CFO). The performance degradation due to receiver IQ imbalance and CFO in OFDM systems has been investigated in [7] and [8]. Several compensation algorithms considering either only receiver IQ imbalance or transmitter IQ imbalance individually have been developed in [9]–[11]. Recently, joint transmitter and receiver IQ imbalance compensation algorithms have been proposed in [12] and [13].

However, all the previously mentioned algorithms ignore the problem of joint IQ imbalance at both transmitter and receiver along with CFO estimation and compensation. In [12], Tsui and Lin analyze the performance of a joint transmitter and receiver IQ compensation technique under a small residual CFO. However, the compensation scheme does not eliminate the effect of the CFO. The combination of CFO with receiver IQ imbalance has been studied in [14] and [15]. To the best of our knowledge, no general solution has been proposed so far for the problem combining CFO with both transmitter and receiver IQ imbalance.

This paper is organized as follows. In Section II, we introduce an IQ imbalance model and describe its impact in OFDM based

Manuscript received August 21, 2005; revised January 15, 2007. This work was carried out at the ESAT Laboratory of the Katholieke Universiteit Leuven, in the frame of Belgian Programme on Inter-University Attraction Poles, initiated by the Belgian Federal Science Policy Office IUAP P5/11 ("Mobile multimedia communication systems and networks"). The Scientific responsibility is assumed by its authors. The associate editor coordinating the review of this manuscript and approving it for publication was Dr. Hongya Ge.

The authors are with the Department of Electrical Engineering, ESAT-SCD, Katholieke Universiteit Leuven, B-3001 Leuven, Belgium (e-mail: deepaknath.tandur@esat.kuleuven.be; marc.moonen@esat.kuleuven.be).

Digital Object Identifier 10.1109/TSP.2007.898788

1053-587X/$25.00 © 2007 IEEE

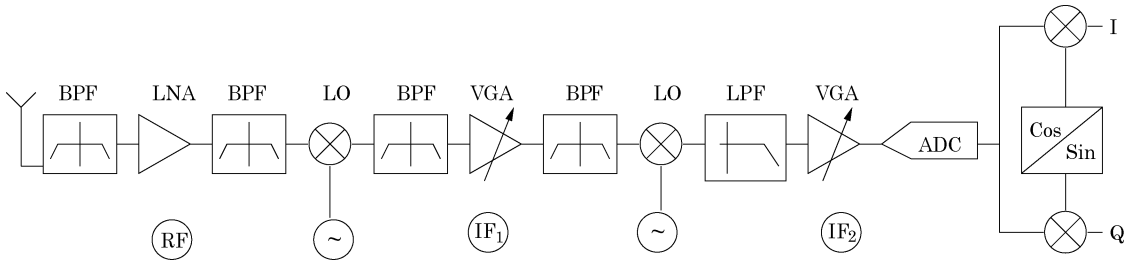

Fig. 1. Superheterodyne receiver architecture.

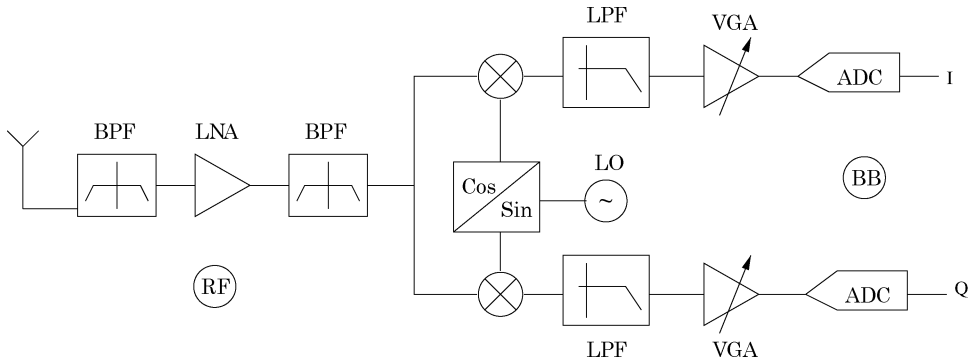

Fig. 2. Zero-IF receiver architecture.

systems. Section III describes the mutual impact of IQ imbalance and CFO. In Section IV, the basics of a suitable transmitter and receiver IQ imbalance and CFO compensation scheme are explained. Section V presents the adaptive compensation algorithm. Our simulation results are shown in Section VI and, finally, the conclusion is given in Section VII.

II. IQ Imbalance Model and Impact

In the up-conversion of a zero-IF architecture, the incoming signal in the I path is up-converted by the local oscillator (LO) signal at the carrier frequency, while the Q path is up-converted by the LO signal with a 90° phase shift. The combination of these two signals results in the RF signal. As the IQ modulation is performed in the analog domain, the matching of the I and Q paths is not perfect: the filtering at baseband may not be 100% matched, the 90° phase rotation of the LO signal will be slightly off and the I and Q paths may not be matched with perfectly equal power, especially if cheap components or architectures are used. All these contributions result in a mismatch between the I and Q path, the so-called transmitter IQ mismatch or transmitter IQ imbalance. A similar mismatch and imbalance occurs in the down-conversion stage at the receiver and is referred to as receiver IQ mismatch or receiver IQ imbalance.

We analyze the effect of IQ imbalance in the time and frequency domain. Frequency domain signals are underscored, while time domain signals are not. Vectors are indicated in bold and scalar parameters in normal font. Superscripts *, ^{T}, and ^{H} represent conjugate, transpose, and Hermitian, respectively.

Let $\mathbf{s}$ represent the transmitted baseband complex signal vector of length N before being distorted by the IQ imbalance at the transmitter. The distorted signal in the time domain can then be modeled as [16]

$$\begin{aligned}\mathbf{s_{Tiq}} = {} & (1+\epsilon_t)\cos\Delta\phi_t \Re\{\mathbf{s}\} - (1+\epsilon_t)\sin\Delta\phi_t \Im\{\mathbf{s}\} \\ & + \jmath((1-\epsilon_t)\cos\Delta\phi_t \Im\{\mathbf{s}\} - (1-\epsilon_t)\sin\Delta\phi_t \Re\{\mathbf{s}\})\end{aligned} \tag{1}$$

where $\mathbf{s_{Tiq}}$ is the time domain signal vector with transmitter IQ imbalance. $\Re\{\ \}$ denotes the real part and $\Im\{\ \}$ the imaginary part. The distortion parameters ϵ_t and ϕ_t are the amplitude and phase orthogonality mismatch between the I and Q branches in the RF modulation process at the transmitter.

For analytical derivations, (1) can be rewritten as

$$\begin{aligned}\mathbf{s_{Tiq}} &= (\cos\Delta\phi_t + \jmath\epsilon_t \sin\Delta\phi_t).\mathbf{s} + (\epsilon_t\cos\Delta\phi_t - \jmath\sin\Delta\phi_t).\mathbf{s}^* \\ \mathbf{s_{Tiq}} &= \alpha_t.\mathbf{s} + \beta_t.\mathbf{s}^*\end{aligned} \tag{2}$$

with

$$\alpha_t = \cos\Delta\phi_t + \jmath\epsilon_t\sin\Delta\phi_t \tag{3}$$

$$\beta_t = \epsilon_t\cos\Delta\phi_t - \jmath\sin\Delta\phi_t. \tag{4}$$

Equation (2) shows that the effect of transmitter IQ imbalance on the time domain signal is twofold. First, the signal is scaled by a complex factor $(\alpha_t \approx 1)$. Second, a small scaled version $(\beta_t \approx 0)$ of its complex conjugate is added. If no IQ imbalance is present, then $\epsilon_t = \Delta\phi_t = 0$ and, thus, $\alpha_t = 1$ and $\beta_t = 0$ and then (2) reduces to $\mathbf{s_{Tiq}} = \mathbf{s}$.

Parameters (α_t, β_t) are used for analytical derivations, as they form a more tractable mathematical description of the IQ imbalance. For simulations, the more physically relevant parameters $(\epsilon_t, \Delta\phi_t)$ will be used.

The IQ imbalance impact on the frequency-domain signal vector $\underline{\mathbf{s}} = \mathrm{DFT}\{\mathbf{s}\}$ is

$$\begin{aligned}\underline{\mathbf{s}}_{\mathbf{Tiq}} &= \mathrm{DFT}\{\mathbf{s}_{\mathbf{Tiq}}\} \\ &= \mathrm{DFT}\left\{\alpha_t.\mathrm{IDFT}(\underline{\mathbf{s}}) + \beta_t.[\mathrm{IDFT}(\underline{\mathbf{s}})]^*\right\} \\ \underline{\mathbf{s}}_{\mathbf{Tiq}} &= \alpha_t.\underline{\mathbf{s}} + \beta_t.\underline{\mathbf{s}_{\mathbf{m}}}^*. \end{aligned} \tag{5}$$

Here, $()_m$ denotes the mirroring operation in which the vector indices are reversed, such that $\underline{\mathbf{s}}_m[l] = \underline{\mathbf{s}}[l_m]$,where

$$\begin{cases} l_m = 2 + N - l, & \text{for } l = 2, \ldots, N \\ l_m = l, & \text{for } l = 1. \end{cases}$$

l_m is the mirror carrier of l and N is the number of subcarriers in an OFDM symbol.

We now consider OFDM transmission over a time invariant frequency selective channel. Let $\underline{\mathbf{c}}$ be the frequency response of the multipath channel of length L. The channel then adds a filtering that should be included in formula (2). If the channel impulse response is shorter than the OFDM cyclic prefix, which is a standard assumption, formula (2) is changed to

$$\begin{aligned}\mathbf{s}_{\mathbf{Tiq-c}} &= \mathrm{IDFT}\left(\underline{\mathbf{c}} \star \mathrm{DFT}(\mathbf{s}_{\mathbf{Tiq}})\right) + \mathbf{v} \\ &= \mathrm{IDFT}\left(\underline{\mathbf{c}} \star \mathrm{DFT}(\alpha_t.\mathbf{s} + \beta_t.\mathbf{s}^*)\right) + \mathbf{v} \\ \underline{\mathbf{s}}_{\mathbf{Tiq-c}} &= \alpha_t.(\underline{\mathbf{c}} \star \underline{\mathbf{s}}) + \beta_t.(\underline{\mathbf{c}} \star \underline{\mathbf{s}_{\mathbf{m}}}^*) + \underline{\mathbf{v}} \end{aligned} \tag{6}$$

where "$\star$" denotes component-wise vector multiplication and $\mathbf{v}$ is assumed to be a circular (proper) complex additive white Gaussian noise (AWGN) and $\underline{\mathbf{v}}$ is its frequency response.

A similar expression as formulas (1) and (2) can be used to model IQ imbalance at the receiver. Let $\mathbf{r}$ represent the received baseband complex signal of length N before being distorted by IQ imbalance. Then, the distorted baseband signal in the time domain will be given as

$$\mathbf{r}_{\mathbf{Riq}} = \alpha_r.\mathbf{r} + \beta_r.\mathbf{r}^* \tag{7}$$

where the distortion parameters α_r and β_r are defined as in (3) and (4) and $\mathbf{r}_{\mathbf{Riq}}$ is the time domain signal vector with receiver IQ imbalance.

When the impact of transmitter and receiver IQ imbalance along with channel distortions are considered, then (7) is changed as follows:

$$\begin{aligned}\mathbf{r}_{\mathbf{Tiq-c-Riq}} &= \alpha_r.(\mathbf{s}_{\mathbf{Tiq-c}}) + \beta_r.(\mathbf{s}_{\mathbf{Tiq-c}})^* \\ &= \alpha_r.\left(\mathrm{IDFT}\left(\underline{\mathbf{c}} \star \mathrm{DFT}(\mathbf{s}_{\mathbf{Tiq}})\right) + \mathbf{v}\right) \\ &\quad + \beta_r.\left(\mathrm{IDFT}\left(\underline{\mathbf{c}} \star \mathrm{DFT}(\mathbf{s}_{\mathbf{Tiq}})\right) + \mathbf{v}\right)^* \\ \underline{\mathbf{r}}_{\mathbf{Tiq-c-Riq}} &= \left(\alpha_r.\alpha_t.\underline{\mathbf{c}} + \beta_r.\beta_t^*.\underline{\mathbf{c}_{\mathbf{m}}}^*\right) \star \underline{\mathbf{s}} \\ &\quad + \left(\alpha_r.\beta_t.\underline{\mathbf{c}} + \beta_r.\alpha_t^*.\underline{\mathbf{c}_{\mathbf{m}}}^*\right) \star \underline{\mathbf{s}_{\mathbf{m}}}^* \\ &\quad + \alpha_r.\underline{\mathbf{v}} + \beta_r.\underline{\mathbf{v}_{\mathbf{m}}}^*. \end{aligned} \tag{8}$$

Equation (8) shows that due to transmitter and receiver IQ imbalance power leaks from the signal on the mirror carrier ($\underline{\mathbf{s}_{\mathbf{m}}}^*$) to the carrier under consideration ($\underline{\mathbf{s}}$) and thus causes inter-carrier-interference (ICI). As OFDM is very sensitive to ICI, IQ imbalance results in severe performance degradation. This is later illustrated in Section VI.

III. CFO Model and Impact

Since OFDM is very sensitive to a CFO [7], this distortion also needs to be taken into account. In this section, a model is proposed that incorporates both IQ imbalance and CFO.

During the up and down conversion of a zero-IF architecture, ideally the LO should produce a pure sine wave at the standardized RF carrier frequency to translate the baseband signal to RF and vice versa. However, in practice, the produced carrier frequency may vary from one realization to another, resulting in a possible CFO between the transmitter and the receiver.

For a receiver with no IQ imbalance, the time domain effect of a CFO Δf on an incoming signal $\mathbf{r}$ is a phase rotation proportional with time. This results in a rotated signal vector $\mathbf{r}_{\mathbf{cfo}}$ given as

$$\mathbf{r}_{\mathbf{cfo}} = \mathbf{r} \star e^{\jmath 2\pi \Delta f.\mathbf{t}} \tag{9}$$

with $e^{\jmath \mathbf{x}}$ the element-wise exponential function on the vector $\mathbf{x}$ and where $\mathbf{t}$ is a time vector.

When CFO is present together with receiver IQ imbalance, the resulting baseband signal can be written as [14]

$$\mathbf{r}_{\mathbf{cfo-Riq}} = \alpha_r.\mathbf{r} \star e^{\jmath 2\pi \Delta f.\mathbf{t}} + \beta_r.\mathbf{r}^* \star e^{-\jmath 2\pi \Delta f.\mathbf{t}} \tag{10}$$

which effectively means that the signal is first distorted by CFO and then by the receiver IQ imbalance.

For the case involving CFO as well as transmitter and receiver IQ imbalance and channel distortions, the previous equation changes to

$$\begin{aligned}&\mathbf{r}_{\mathbf{Tiq-c-cfo-Riq}} \\ &\quad = \alpha_r.\mathbf{s}_{\mathbf{Tiq-c}} \star e^{\jmath 2\pi \Delta f.\mathbf{t}} + \beta_r.\mathbf{s}^*_{\mathbf{Tiq-c}} \star e^{-\jmath 2\pi \Delta f.\mathbf{t}} \\ &\quad = \alpha_r.\left(\mathrm{IDFT}\left(\underline{\mathbf{c}} \star \mathrm{DFT}(\alpha_t.\mathbf{s} + \beta_t.\mathbf{s}^*)\right)\right) \star e^{\jmath 2\pi \Delta f.\mathbf{t}} \\ &\qquad + \beta_r.\left(\mathrm{IDFT}\left(\underline{\mathbf{c}} \star \mathrm{DFT}(\alpha_t.\mathbf{s} + \beta_t.\mathbf{s}^*)\right)\right)^* \star e^{-\jmath 2\pi \Delta f.\mathbf{t}} \\ &\qquad + \alpha_r.\mathbf{v} \star e^{\jmath 2\pi \Delta f.\mathbf{t}} + \beta_r.\mathbf{v}^* \star e^{-\jmath 2\pi \Delta f.\mathbf{t}}. \end{aligned} \tag{11}$$

The joint effect of both transmitter and receiver IQ imbalance along with CFO results in a severe performance degradation, as will be shown in Section VI, and so a digital compensation scheme is required.

IV. IQ Imbalance and CFO Compensation

Following the joint model from Section III, formula (11), we know that the received OFDM symbol in the time domain is given as

$$\begin{aligned}\mathbf{r}_{\mathbf{Tiq-c-cfo-Riq}} &= \alpha_r.\mathbf{p} \star e^{\jmath 2\pi \Delta f.\mathbf{t}} + \beta_r.\mathbf{p}^* \star e^{-\jmath 2\pi \Delta f.\mathbf{t}} \\ &\quad + \alpha_r.\mathbf{v} \star e^{\jmath 2\pi \Delta f.\mathbf{t}} + \beta_r.\mathbf{v}^* \star e^{-\jmath 2\pi \Delta f.\mathbf{t}} \end{aligned} \tag{12}$$

where $\mathbf{p} = \mathrm{IDFT}(\underline{\mathbf{c}} \star \mathrm{DFT}(\alpha_t.\mathbf{s} + \beta_t.\mathbf{s}^*))$. Equation (12) explicitly shows only the CFO, the receiver IQ imbalance and the noise contribution. The channel filtering and the distortion due to transmitter IQ imbalance are hidden in the definition of $\mathbf{p}$ and so not considered for the time being.

We now assume that the CFO Δf can be estimated accurately in the system. In practice, several CFO estimation schemes indeed exist that are found to be sufficiently robust against the IQ

imbalance [14] and [15]. Given a good estimate of Δf, obtained using one of these schemes, we first perform an element-wise multiplication of the received distorted symbol with the estimated negative frequency offset $e^{-\jmath 2\pi\Delta f.\mathbf{t}}$. This results in a vector $\mathbf{r_1}$ as follows:

$$\begin{aligned}\mathbf{r_1} &= \mathbf{r_{Tiq-c-cfo-Riq}} \star e^{-\jmath 2\pi\Delta f.\mathbf{t}} \\ &= \alpha_r.\mathbf{p}+\beta_r.\mathbf{p}^* \star e^{-2\jmath 2\pi\Delta f.\mathbf{t}}+\alpha_r.\mathbf{v}+\beta_r.\mathbf{v}^* \star e^{-2\jmath 2\pi\Delta f.\mathbf{t}} \\ &= \alpha_r.\mathbf{p}+\beta_r.\mathbf{q}+\mathbf{v}_1 \end{aligned} \tag{13}$$

where $\mathbf{q} = \mathbf{p}^* \star e^{-2\jmath 2\pi\Delta f.\mathbf{t}}$ and $\mathbf{v}_1 = \alpha_r.\mathbf{v}+\beta_r.\mathbf{v}^* \star e^{-2\jmath 2\pi\Delta f.\mathbf{t}}$ is now a zero mean improper complex noise vector [17] mainly due to the presence of receiver IQ imbalance.

Similarly, we also perform an element-wise multiplication of the complex conjugate of the received signal with the negative frequency offset $e^{-\jmath 2\pi\Delta f.\mathbf{t}}$ resulting in a vector $\mathbf{r_2}$ as follows:

$$\begin{aligned}\mathbf{r_2} &= (\mathbf{r_{Tiq-c-cfo-Riq}})^* \star e^{-\jmath 2\pi\Delta f.\mathbf{t}} \\ &= \big(\alpha_r^*.\mathbf{p}^* \star e^{-\jmath 2\pi\Delta f.\mathbf{t}}+\beta_r^*.\mathbf{p} \star e^{\jmath 2\pi\Delta f.\mathbf{t}} \\ &\quad +\alpha_r^*.\mathbf{v}^* \star e^{-\jmath 2\pi\Delta f.\mathbf{t}}+\beta_r^*.\mathbf{v} \star e^{\jmath 2\pi\Delta f.\mathbf{t}}\big) \star e^{-\jmath 2\pi\Delta f.\mathbf{t}} \\ &= \beta_r^*.\mathbf{p}+\alpha_r^*.\mathbf{p}^* \star e^{-2\jmath 2\pi\Delta f.\mathbf{t}}+\beta_r^*.\mathbf{v}+\alpha_r^*.\mathbf{v}^* \star e^{-2\jmath 2\pi\Delta f.\mathbf{t}} \\ &= \beta_r^*.\mathbf{p}+\alpha_r^*.\mathbf{q}+\mathbf{v}_2 \end{aligned} \tag{14}$$

where now $\mathbf{v}_2 = \beta_r^*.\mathbf{v}+\alpha_r^*.\mathbf{v}^* \star e^{-2\jmath 2\pi\Delta f.\mathbf{t}}$ is also a zero mean improper complex noise vector.

Both $\mathbf{r_1}$ and $\mathbf{r_2}$ consist of two contributions "$\mathbf{p}$" and "$\mathbf{q}$" scaled by different weighing factors. Here "$\mathbf{p}$" is called the desired signal and "$\mathbf{q}$" the undesired signal. This is because in the frequency domain, the former gives rise to the desired signal, while the latter yields a mirror image and causes ICI (because of the complex conjugate), subject to leakage caused by the exponential term ($e^{-2\jmath 2\pi\Delta f.\mathbf{t}}$).

Transforming (13) and (14) to the frequency domain, we obtain

$$[\underline{\mathbf{r_1}} \quad \underline{\mathbf{r_2}}] = [\underline{\mathbf{p}} \quad \underline{\mathbf{q}}].\begin{bmatrix}\alpha_r & {\beta_r}^* \\ \beta_r & {\alpha_r}^*\end{bmatrix} + [\underline{\mathbf{v}_1} \quad \underline{\mathbf{v}_2}]. \tag{15}$$

The resulting matrix $[\underline{\mathbf{r_1}}\ \underline{\mathbf{r_2}}]$ is of dimension $N \times 2$. Equation (15) can be written more explicitly for each component (frequency bin) "l" as

$$\big[\underline{\mathbf{r_1}}[l] \quad \underline{\mathbf{r_2}}[l]\big] = \big[\underline{\mathbf{p}}[l] \quad \underline{\mathbf{q}}[l]\big] \cdot \begin{bmatrix}\alpha_r & {\beta_r}^* \\ \beta_r & {\alpha_r}^*\end{bmatrix} + \big[\underline{\mathbf{v}_1}[l] \quad \underline{\mathbf{v}_2}[l]\big] . \tag{16}$$

From the definition of $\mathbf{p}$ it follows that $\underline{\mathbf{p}} = \underline{\mathbf{c}} \star \mathrm{DFT}(\alpha_t.\mathbf{s}+\beta_t.\mathbf{s}^*)$, hence

$$\underline{\mathbf{p}}[l] = \underline{\mathbf{c}}[l].\left(\alpha_t.\underline{\mathbf{s}}[l]+\beta_t.\underline{\mathbf{s_m}}^*[l]\right). \tag{17}$$

Substituting this in (16) results in

$$\begin{aligned}\big[\underline{\mathbf{r_1}}[l] \quad \underline{\mathbf{r_2}}[l]\big] = \big[\underline{\mathbf{s}}[l] \quad \underline{\mathbf{s}}^*[l_m] \quad \underline{\mathbf{q}}[l]\big] \\ \cdot \begin{bmatrix}\alpha_r\alpha_t\underline{\mathbf{c}}[l] & {\beta_r}^*\alpha_t\underline{\mathbf{c}}[l] \\ \alpha_r\beta_t\underline{\mathbf{c}}[l] & {\beta_r}^*\beta_t\underline{\mathbf{c}}[l] \\ \beta_r & {\alpha_r}^*\end{bmatrix} + \big[\underline{\mathbf{v}_1}[l] \quad \underline{\mathbf{v}_2}[l]\big] .\end{aligned} \tag{18}$$

By replacing l by l_m, we then obtain

$$\begin{aligned}\big[\underline{\mathbf{r_1}}[l_m] \quad \underline{\mathbf{r_2}}[l_m]\big] = \big[\underline{\mathbf{s}}[l_m] \quad \underline{\mathbf{s}}^*[l] \quad \underline{\mathbf{q}}[l_m]\big] \\ \cdot \begin{bmatrix}\alpha_r\alpha_t\underline{\mathbf{c}}[l_m] & {\beta_r}^*\alpha_t\underline{\mathbf{c}}[l_m] \\ \alpha_r\beta_t\underline{\mathbf{c}}[l_m] & {\beta_r}^*\beta_t\underline{\mathbf{c}}[l_m] \\ \beta_r & {\alpha_r}^*\end{bmatrix} \\ + \big[\underline{\mathbf{v}_1}[l_m] \quad \underline{\mathbf{v}_2}[l_m]\big] .\end{aligned} \tag{19}$$

Merging (18) with the complex conjugate of (19), finally results in

$$\begin{aligned}&\big[\underline{\mathbf{r_1}}[l] \quad \underline{\mathbf{r_2}}[l] \quad \underline{\mathbf{r_1}}^*[l_m] \quad \underline{\mathbf{r_2}}^*[l_m]\big] \\ &\quad = \big[\underline{\mathbf{s}}[l] \quad \underline{\mathbf{s}}^*[l_m] \quad \underline{\mathbf{q}}[l] \quad \underline{\mathbf{q}}^*[l_m]\big] \\ &\qquad \cdot \overbrace{\begin{bmatrix}\alpha_r\alpha_t\underline{\mathbf{c}}[l] & {\beta_r}^*\alpha_t\underline{\mathbf{c}}[l] & {\alpha_r}^*{\beta_t}^*\underline{\mathbf{c}}^*[l_m] & \beta_r\beta_t^*\underline{\mathbf{c}}^*[l_m] \\ \alpha_r\beta_t\underline{\mathbf{c}}[l] & {\beta_r}^*\beta_t\underline{\mathbf{c}}[l] & {\alpha_r}^*\alpha_t{}^*\underline{\mathbf{c}}^*[l_m] & \beta_r\alpha_t{}^*\underline{\mathbf{c}}^*[l_m] \\ \beta_r & {\alpha_r}^* & 0 & 0 \\ 0 & 0 & \beta_r^* & \alpha_r\end{bmatrix}}^{\mathbf{T}} \\ &\qquad + \big[\underline{\mathbf{v}_1}[l] \quad \underline{\mathbf{v}_2}[l] \quad \underline{\mathbf{v}_1}^*[l_m] \quad \underline{\mathbf{v}_2}^*[l_m]\big] .\end{aligned} \tag{20}$$

From this it follows that in the noiseless case, $\underline{\mathbf{s}}[l]$ can be obtained by taking an appropriate linear combination (corresponding to the first column of $\mathbf{T}^{-1}$) of the left-hand side quantities, i.e.,

$$\underline{\mathbf{s}}[l] = \big[\underline{\mathbf{r_1}}[l] \quad \underline{\mathbf{r_2}}[l] \quad \underline{\mathbf{r_1}}^*[l_m] \quad \underline{\mathbf{r_2}}^*[l_m]\big] \cdot \begin{bmatrix}\boldsymbol{\chi}[l] \\ \boldsymbol{\psi}[l] \\ \boldsymbol{\gamma}[l] \\ \boldsymbol{\rho}[l]\end{bmatrix} \tag{21}$$

where the weights $\boldsymbol{\chi}$, $\boldsymbol{\psi}$, $\boldsymbol{\gamma}$, and $\boldsymbol{\rho}$ are of length N. This formula demonstrates that a receiver structure can be designed that exactly compensates for the transmitter and receiver IQ imbalance, the CFO and the channel effect. The coefficients $\boldsymbol{\chi}$, $\boldsymbol{\psi}$, $\boldsymbol{\gamma}$, and $\boldsymbol{\rho}$ can be computed from α_t, β_t, α_r, β_r, Δf, and $\underline{\mathbf{c}}$, if these are available. In the noisy case a suitable set of coefficients can be estimated based on an MSE minimization

$$\begin{aligned}&\min_{(\boldsymbol{\chi}[l],\boldsymbol{\psi}[l],\boldsymbol{\gamma}[l],\boldsymbol{\rho}[l])} \mathbb{E} \\ &\quad \times \left\{\left|\underline{\mathbf{s}}[l] - \big[\underline{\mathbf{r_1}}[l] \ \underline{\mathbf{r_2}}[l] \ \underline{\mathbf{r_1}}^*[l_m] \ \underline{\mathbf{r_2}}^*[l_m]\big] \cdot \begin{bmatrix}\boldsymbol{\chi}[l] \\ \boldsymbol{\psi}[l] \\ \boldsymbol{\gamma}[l] \\ \boldsymbol{\rho}[l]\end{bmatrix}\right|^2\right\}\end{aligned}$$

where $\mathbb{E}\{.\}$ is the expectation operator.

In Section V, a training-based initialization of $\boldsymbol{\chi}$, $\boldsymbol{\psi}$, $\boldsymbol{\gamma}$, and $\boldsymbol{\rho}$ is described, based on such an MMSE criterion.

V. Adaptive Compensation Algorithm

In a standard OFDM receiver with no front-end distortion, single tap equalizers are sufficient for channel equalization. However, for an OFDM system with transmitter and receiver IQ imbalance along with CFO and channel distortions, more complex equalization schemes are needed. To mitigate these distortions we propose an OFDM system with four-tap adaptive equalizer for each subcarrier in the OFDM symbol. The four taps of the equalizer can be represented as $\mathbf{w}_1$, $\mathbf{w}_2$, $\mathbf{w}_3$, and $\mathbf{w}_4$ each of length N corresponding to the length of the OFDM

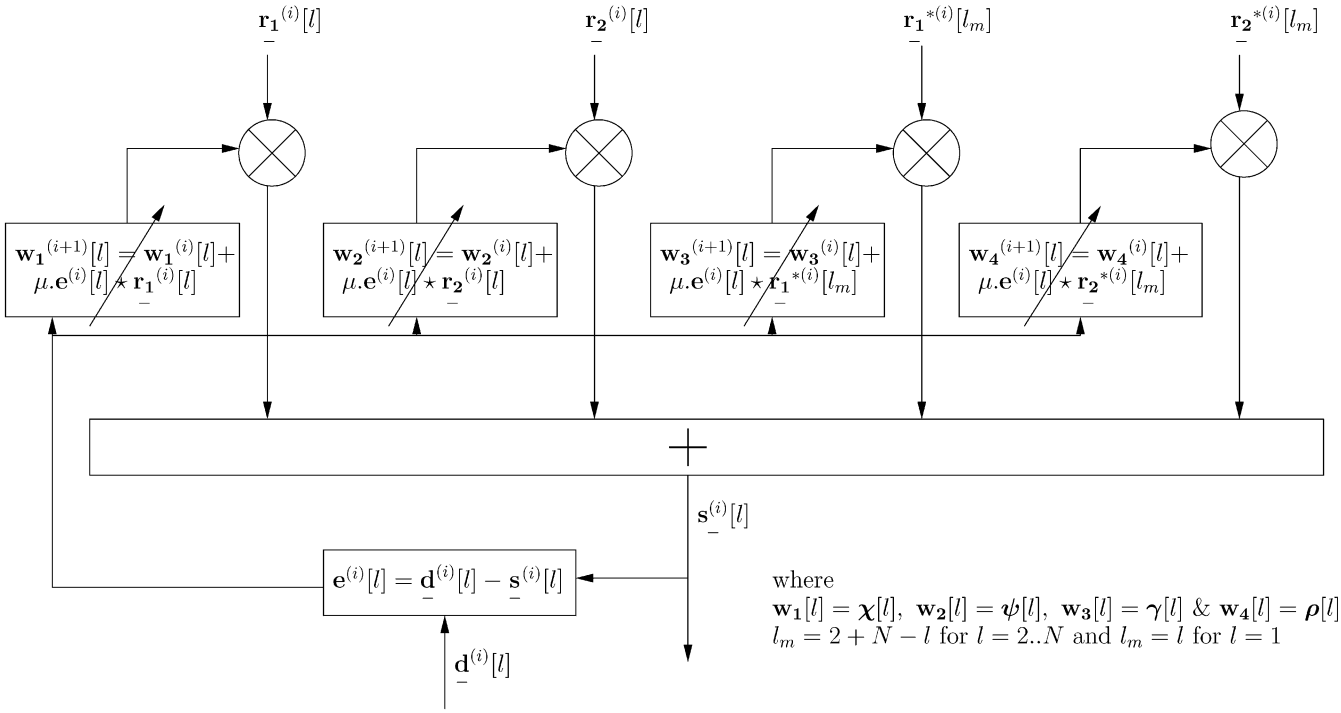

Fig. 3. Four-tap adaptive equalizer to compensate front-end nonidealities along with channel distortion.

symbol. The taps are trained to the desired coefficient vectors $\boldsymbol{\chi}$, $\boldsymbol{\psi}$, $\boldsymbol{\gamma}$, and $\boldsymbol{\rho}$ using the training symbols available in the OFDM system.

The four-tap adaptive equalizer is as shown in Fig. 3. The four inputs of the adaptive equalizer are $\underline{\mathbf{r_1}}[l]$, $\underline{\mathbf{r_2}}[l]$, $\underline{\mathbf{r_1}}^*[l_m]$, and $\underline{\mathbf{r_2}}^*[l_m]$ obtained from the received signal $\mathbf{r_{Tiq-c-cfo-Riq}}$ as discussed in Section IV. The equalizer coefficients $\mathbf{w_1}[l]$, $\mathbf{w_2}[l]$, $\mathbf{w_3}[l]$, and $\mathbf{w_4}[l]$ are updated here based on the well-known LMS scheme but any other adaptive filtering algorithm (minimizing on MMSE criterion) can be used. To better illustrate the update equations, we introduce the time (or iteration) index i, i.e., $\mathbf{w_1}^{(i)}$, $\mathbf{w_2}^{(i)}$, $\mathbf{w_3}^{(i)}$, and $\mathbf{w_4}^{(i)}$ represent the equalization coefficients at time instant i. Similarly, $\underline{\mathbf{s}}^{(i)}$ represents the output of the equalizer at time instant i which is given as

$$\begin{aligned}\underline{\mathbf{s}}^{(i)}[l] = {} & \mathbf{w_1}^{(i)}[l].\underline{\mathbf{r_1}}^{(i)}[l] + \mathbf{w_2}^{(i)}[l].\underline{\mathbf{r_2}}^{(i)}[l] \\ & + \mathbf{w_3}^{(i)}[l].\underline{\mathbf{r_1}}^{*(i)}[l_m] + \mathbf{w_4}^{(i)}[l].\underline{\mathbf{r_2}}^{*(i)}[l_m]. \quad (22)\end{aligned}$$

The equalization coefficients are then updated according to the LMS rule

$$\begin{aligned}\mathbf{w_1}^{(i+1)}[l] &= \mathbf{w_1}^{(i)}[l] + \mu.\mathbf{e}^{(i)}[l] \star \underline{\mathbf{r_1}}^{(i)}[l] \\ \mathbf{w_2}^{(i+1)}[l] &= \mathbf{w_2}^{(i)}[l] + \mu.\mathbf{e}^{(i)}[l] \star \underline{\mathbf{r_2}}^{(i)}[l] \\ \mathbf{w_3}^{(i+1)}[l] &= \mathbf{w_3}^{(i)}[l] + \mu.\mathbf{e}^{(i)}[l] \star \underline{\mathbf{r_1}}^{*(i)}[l_m] \\ \mathbf{w_4}^{(i+1)}[l] &= \mathbf{w_4}^{(i)}[l] + \mu.\mathbf{e}^{(i)}[l] \star \underline{\mathbf{r_2}}^{*(i)}[l_m]\end{aligned}$$

where $\mathbf{e}^{(i)}[l] = \underline{\mathbf{d}}^{(i)}[l] - \underline{\mathbf{s}}^{(i)}[l]$ is the error signal generated at iteration i for the tone index l using a training symbol $\underline{\mathbf{d}}^{(i)}[l]$. μ is the LMS step-size parameter. Once the equalizer coefficients are trained with a suitable number of training symbols, the obtained coefficients are used to equalize the received signal according to (21).

Although LMS is the simplest adaptive filtering algorithm, it suffers from a slow convergence. This problem could be severe for the application at hand, since current OFDM systems usually deploy only short training sequences in order to reduce the training overhead in packet-based data transmission. A short training length is acceptable in an OFDM system with ideal I and Q branches as a good channel estimation can be achieved only with a few training symbols. However, due to IQ imbalance, there is a cross-coupling between every tone and its mirrored tone, resulting in ICI. The ICI is more severe when CFO is also considered and thus resulting in a very slow convergence rate. Better adaptive algorithms like RLS could then be used which have a faster convergence rate, if the added complexity can be afforded [18].

An end-to-end OFDM system with the compensation scheme is shown in Fig. 4. The shaded blocks are the front-ends of the communication system where IQ imbalance and CFO distortion is introduced.

It is noted that the receiver structure shown in Fig. 4 generalizes earlier structures for specific subproblems. References [11] and [14], for instance, apply to the compensation of CFO with either transmitter or with receiver IQ imbalance but not both. In this case, the output of any one FFT branch can be taken (instead of both outputs) as the compensation can then be obtained with a two tap adaptive equalizer.

VI. Simulation Results

A typical OFDM system (similar to IEEE 802.11a) is simulated to evaluate the performance of the compensation scheme for transmitter and receiver imbalance under CFO. The performance comparison is made with an ideal system with no

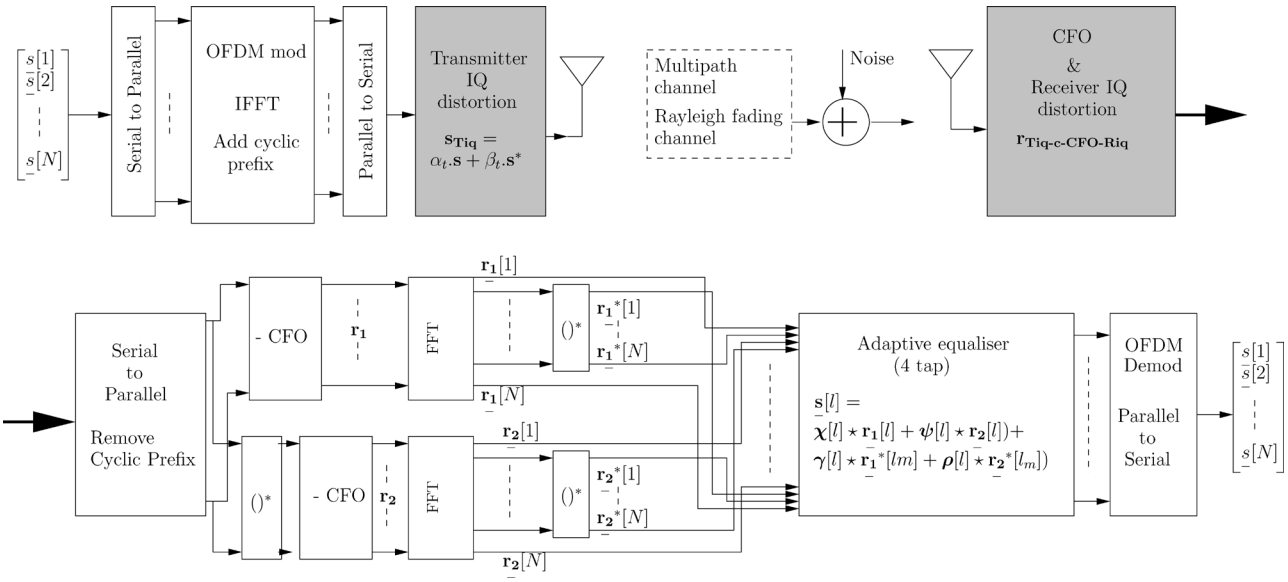

Fig. 4. OFDM system with post-FFT compensation of transmitter and receiver IQ imbalance with CFO.

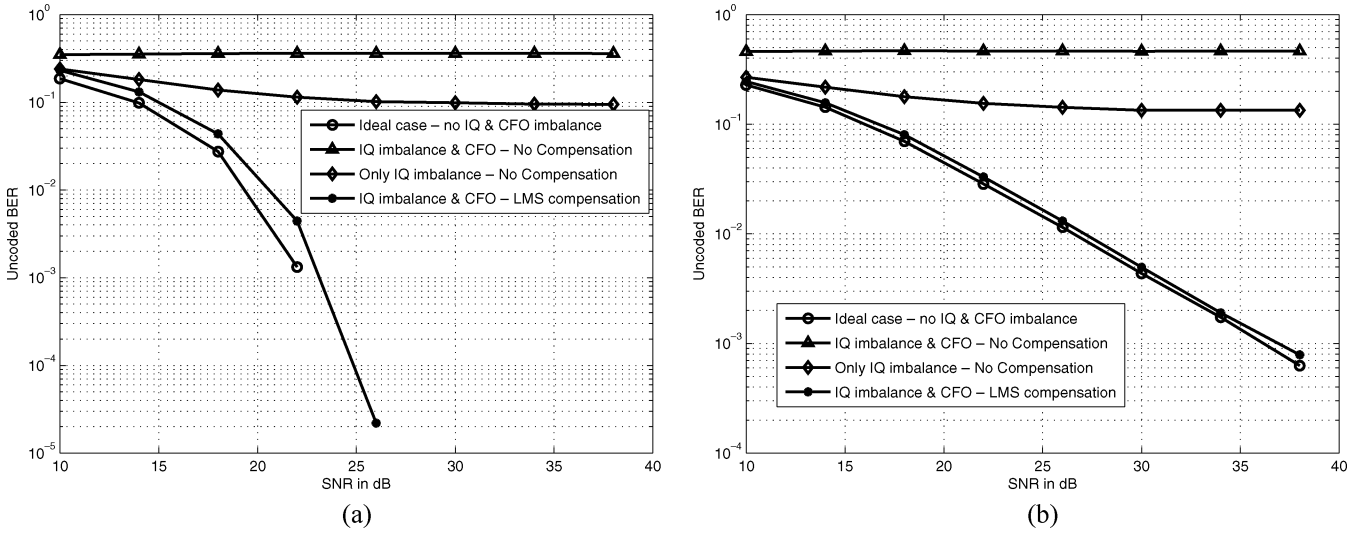

Fig. 5. BER versus SNR simulated for 64 QAM constellation with LMS adaptive equalization. Transmitter phase imbalance of $\Delta\phi_t = 5^\circ$, transmitter amplitude imbalance of $\epsilon_t = 5\%$, receiver phase imbalance of $\Delta\phi_r = 5^\circ$, receiver amplitude imbalance of $\epsilon_t = 5\%$, and CFO of $\zeta = 0.32$ ($\zeta = T.N.\Delta f$). (a) AWGN flat channel (nonfading). (b) Four-tap complex Gaussian channel (fading).

front-end distortion and with a system with no compensation algorithm included.

The parameters used in the simulation are: OFDM symbol length of $N = 64$, cyclic prefix of $CP = 16$. There are two different channel profiles: 1) an additive white Gaussian noise (AWGN) channel with a single tap unity gain and 2) a multipath channel with $(L+1) = 4$ taps where the taps are chosen independently with complex Gaussian distribution. Every channel realization is independent of the previous one and the BER results depicted are from averaging the BER curves over several independent channels. The step size μ of the adaptive equalizer is kept at 0.2.

We consider IQ amplitude imbalance of ϵ_t, $\epsilon_r = 5\%$, and phase imbalance of $\Delta\phi_t$, $\Delta\phi_r = 5^\circ$ at both transmitter and receiver. For CFO, the standard [2] specifies a maximum tolerable frequency deviation of 20 ppm. For a transmitter and receiver LO operating between 5 and 6 GHz, this translates in a maximum $\Delta f \approx 240$ kHz. For the simulation, we consider $\Delta f = 100$ kHz. The CFO is usually considered as the ratio ζ of the actual carrier frequency offset Δf to the subcarrier spacing $1/T.N.$, i.e., $\zeta = T.N.\Delta f$, where T is the sampling period. In our case, the subcarrier spacing is 312.5 kHz, thus ζ is 0.32.

Fig. 5 shows the performance curves obtained for BER versus SNR for an uncoded 64QAM OFDM system. With no compensation scheme in place, the OFDM system is completely unusable. Even for the case when there is only transmitter and receiver IQ imbalance and no CFO, the BER is very high. For the case with the compensation scheme employed, the curves are very close to the ideal situation with no front-end distortion. The compensation performance depends on how accurately the adaptive equalizer coefficients can converge to the ideal values.

The design of zero-IF receivers typically yields an IQ imbalance on the order of $(\epsilon, \Delta\phi) = (2-3\%, 2-3^\circ)$ [19]. The performance curves clearly demonstrate that for such IQ imbal-

ance values compensation is absolutely necessary to enable a high data rate communication. When CFO is also present, the system certainly cannot work without a suitable compensation technique. Moreover, very large IQ imbalance values can be corrected just as easily. Thus, the presented IQ-CFO mitigation allows to greatly relax the zero-IF design specifications.

VII. Conclusion

In this paper, the joint effect of both transmitter and receiver IQ imbalance under carrier frequency offsets in an OFDM system is studied and an algorithm has been developed to compensate for such distortions in the digital domain. The algorithm involved is a very efficient post-FFT adaptive equalization which leads to near ideal compensation.

References

[1] J. Bingham, "Multicarrier modulation for data transmission: An idea whose time has come," *IEEE Commun. Mag.*, vol. 28, no. 5, pp. 5–14, May 1990.

[2] *Wireless LAN Medium Access Control (MAC) and Physical Layer (PHY) Specifications: High-Speed Physical Layer in the 5 GHz Band*, IEEE Standard 802.11a-1999-Part 11, 1999.

[3] ETSI, "Broadband Radio Access Networks (BRAN); HIPERLAN type 2; Physical (PHY) layer, Version 1.1.1," Tech. Rep. TR 101 475, 2000.

[4] I. Koffman and V. Roman, "Broadband wireless access solutions based on OFDM access in IEEE 802.16," *IEEE Commun. Mag.*, vol. 40, no. 4, pp. 96–103, Apr. 2002.

[5] U. Reimers, "DVB-T: The COFDM-based system for terrestrial television," *IEE Electron. Commun. Eng. J.*, vol. 9, no. 1, pp. 28–32, Feb. 1997.

[6] P. Shelswell, "The COFDM modulation system: The heart of digital audio broadcasting," *IEE Electron. Commun. Eng. J.*, vol. 7, no. 3, pp. 127–136, Jun. 1995.

[7] T. Pollet, M. Van Bladel, and M. Moeneclaey, "BER sensitivity of OFDM systems to carrier frequency offset and wiener phase noise," *IEEE Trans. Commun.*, vol. 43, no. 2/3/4, pp. 191–193, Feb./Mar./Apr. 1995.

[8] C. L. Liu, "Impact of I/Q imbalance on QPSK-OFDM-QAM detection," *IEEE Trans. Consumer Electron.*, vol. 44, no. 8, pp. 984–989, Aug. 1998.

[9] A. Tarighat, R. Bagheri, and A. H. Sayed, "Compensation schemes and performance analysis of IQ imbalances in OFDM receivers," *IEEE Trans. Signal Process.*, vol. 53, no. 8, pp. 3257–3268, Aug. 2005.

[10] A. Schuchert, R. Hasholzner, and P. Antoine, "A novel IQ imbalance compensation scheme for the reception of OFDM signals," *IEEE Trans. Consumer Electron.*, vol. 47, no. 8, pp. 313–318, Aug. 2001.

[11] J. Tubbax, B. Come, L. Van der Perre, S. Donnay, M. Moonen, and H. De Man, "Compensation of transmitter IQ imbalance for OFDM systems," in *Proc. IEEE Int. Conf. Acoust., Speech Signal Process. (ICASSP)*, 2004, pp. 325–328.

[12] E. Tsui and J. Lin, "Adaptive IQ imbalance correction for OFDM systems with frequency and timing offsets," in *Proc. IEEE GLOBECOM*, 2004, pp. 4004–4010.

[13] A. Tarighat and A. H. Sayed, "OFDM systems with both transmitter and receiver IQ imbalances," in *Proc. IEEE Int. Workshop Signal Process. Adv. Wireless Commun. (SPAWC)*, 2005, pp. 735–739.

[14] J. Tubbax, B. Come, L. Van der Perre, S. Donnay, M. Engels, M. Moonen, and H. De Man, "Joint compensation of IQ imbalance and frequency offset in OFDM systems," in *Proc. Radio Wireless Conf. (RWC)*, 2003, pp. 39–42.

[15] F. Yan, W. Zhu, and M. O. Ahmad, "Carrier frequency offset estimation for OFDM systems with I/Q imbalance," in *Proc. IEEE 47th Midw. Symp. Circuits Syst.*, 2004, pp. 633–636.

[16] B. Razavi, *RF Microelectronics*. Englewood Cliffs, NJ: Prentice-Hall, 1998.

[17] F. D. Neeser and J. L. Massey, "Proper complex random processes with applications to information theory," *IEEE Trans. Inf. Theory*, vol. 39, no. 4, pp. 1293–1302, Jul. 1993.

[18] S. Haykin, *Adaptive Filter Theory*. Englewood Cliffs, NJ: Prentice-Hall, 2002.

[19] B. Come, D. Hauspie, G. Albasini, S. Brebels, W. De Raedt, W. Diels, W. Eberle, H. Minami, J. Ryckaert, J. Tubbax, and S. Donnay, "Single-package direct-conversion receiver for 802.11a wireless LAN enhanced with fast converging digital compensation techniques," in *Proc. IEEE Int. Microw. Symp.*, 2004, pp. 555–558.



Deepaknath Tandur (S'05) received the B.S. degree in electronics and communications engineering from RV College of Engineering, Bangalore University, Bangalore, India, in 2001 and the M.S. degree in embedded systems design engineering from University of Lugano, ALaRI, Lugano, Switzerland, in 2004. He is currently pursuing the Ph.D. degree in electrical engineering from the Katholieke Universiteit Leuven, Leuven, Belgium.

His research interests include communication systems and signal processing, including MIMO OFDM systems, algorithms for front-end impairments compensations, channel identification and equalization, and experimental and practical communication systems.



Marc Moonen (M'94–SM'06–F'07) received the electrical engineering and Ph.D. degrees in applied sciences from Katholieke Universiteit Leuven, Leuven, Belgium, in 1986 and 1990, respectively.

Since 2004, he has been a Full Professor with the Electrical Engineering Department, Katholieke Universiteit Leuven, where he is heading a research team working in the area of numerical algorithms and signal processing for digital communications, wireless communications, DSL, and audio signal processing.

Prof. Moonen was a recipient of the 1994 K.U.Leuven Research Council Award, the 1997 Alcatel Bell (Belgium) Award (with P. Vandaele), the 2004 Alcatel Bell (Belgium) Award (with R. Cendrillon), a Journal Best Paper Award from the IEEE Transactions on Signal Processing (with G. Leus) and from Elsevier Signal Processing (with S. Doclo), and was a 1997 "Laureate of the Belgium Royal Academy of Science." He was chairman of the IEEE Benelux Signal Processing Chapter (1998–2002), and is currently President of the European Association for Signal, Speech and Image Processing (EURASIP) and a member of the IEEE Signal Processing Society Technical Committee on Signal Processing for Communications. He has served as Editor-in-Chief for the *EURASIP Journal on Applied Signal Processing* (2003–2005) and has been a member of the editorial board of the IEEE Transactions on Circuits and Systems—II: Regular Papers (2002–2003) and the *IEEE Signal Processing Magazine* (2003–2005). He is currently a member of the editorial board of *Integration, the VLSI Journal*, *EURASIP Journal on Applied Signal Processing*, *EURASIP Journal on Wireless Communications and Networking*, and *Signal Processing*.