ADAPTIVE COMPENSATION OF FREQUENCY SELECTIVE IQ IMBALANCE AND CARRIER FREQUENCY OFFSET FOR OFDM BASED RECEIVERS

Deepaknath Tandur and Marc Moonen

Katholieke Universiteit Leuven, E.E. Dept., Kasteelpark Arenberg 10, B-3001 Heverlee, Belgium
Email:{deepaknath.tandur, marc.moonen}@esat.kuleuven.be

ABSTRACT

Direct conversion architectures are currently receiving a lot of interest in OFDM based wireless transmission systems. However such systems are very sensitive to front-end non-idealities such as in-phase/quadrature-phase (IQ) imbalances and carrier frequency offset. In this paper the joint effect of frequency selective IQ imbalance at the receiver under carrier frequency offset is studied. We also consider the case when the cyclic prefix is not sufficiently long to accommodate the channel impulse response combined with the receiver filter, which results in inter-block-interference (IBI) between the OFDM symbols. We propose a frequency domain per-tone equalizer (PTEQ) based receiver structure obtained by transferring a time domain equalizer (TEQ) to the frequency domain. In addition to the frequency domain PTEQ design procedure, a training-based RLS type initialization scheme for direct per-tone equalization is proposed. The algorithm involved provides a very efficient post-FFT adaptive equalization and front-end compensation performance which is shown to be close to the ideal case.

1. INTRODUCTION

Orthogonal Frequency Division Multiplexing (OFDM) [1] is a popular, standardized modulation technique for broadband wireless systems: it is used for Wireless LAN [2], Fixed Broadband Wireless Access [3], Digital Video & Audio Broadcasting [4],[5] etc.

Hence, a lot of effort is spent in developing integrated, cost and power efficient OFDM systems. The zero-IF receiver (or direct-conversion receiver) is an attractive candidate as it can convert the radio frequency (RF) signal directly to baseband (BB) without any intermediate frequencies (IF). However the zero-IF architecture has an inherent two-path (in-phase/quadrature-phase, IQ) analog processing which results in the system being extremely sensitive to I and Q branch mismatches. Due to component imperfections in practical analog electronics such imbalances are unavoidable, resulting in an overall performance degradation of the system.

Rather than decreasing the IQ imbalance by increasing the design time and the component cost of the analog processing, IQ imbalance can also be tolerated and then compensated digitally. Along with IQ imbalance, OFDM systems are also very sensitive to carrier frequency offset (CFO). The performance degradation due to receiver IQ imbalance and CFO in OFDM systems has been investigated in [6]-[8]. Joint compensation algorithm for frequency independent IQ imbalance and CFO has been developed in [9]. In [10], a time domain compensation for frequency selective IQ imbalance and CFO is proposed. This time domain solution equalizes all tones in a combined fashion and as a result limits performance of the system.

In this paper, an adaptive RLS based frequency domain per-tone equalizer (PTEQ) is proposed to compensate for joint frequency selective IQ imbalance, CFO and channel distortions. A frequency domain PTEQ solution enables true signal-to-noise (SNR) optimization per-tone, because the equalization of one carrier is independent of the equalization of other carriers. We also consider the case when the cyclic prefix is not sufficiently long to accommodate the combined channel and receiver filter impulse response which results in inter-block-interference (IBI) between adjacent OFDM symbols. In this case a PTEQ can be designed to shorten the combined impulse response to fit within the cyclic prefix [11] and also compensate the analog front-end imperfection. The present research is an extension of our previous work [12], [13] where joint transmitter and receiver frequency independent IQ imbalance under CFO has been studied, and [14] where joint transmitter and receiver frequency selective IQ imbalance compensation algorithms have been developed for the case when there is no CFO.

This paper is organized as follows. Section 2 describes the IQ imbalance and CFO model in OFDM systems. Section 3 explains the IQ and CFO compensation scheme. Section 4 explains the adaptive compensation algorithm used. Simulation results are shown in section 5 and finally conclusions are given in section 6.

Notation: Vectors are indicated in bold and scalar parameters in normal font. Superscripts $^*, ^T, ^H$ represent conjugate, transpose and hermitian respectively. $\mathbf{F}$ and $\mathbf{F}^{-1}$ represent the $N \times N$ discrete Fourier transform and its inverse. $\mathbf{I}_N$ is the $N \times N$ identity matrix and $0_{M\times N}$ is the $M \times N$ all zero matrix. Operators $\otimes$, $\star$ and . denote Kronecker product, convolution and component-wise vector multiplication respectively.

2. IQ IMBALANCE AND CFO MODEL

Let $\mathbf{S}^{(i)}$ be the frequency domain OFDM symbol of size $(N \times 1)$ where i is the time index of the symbol. We consider two successive OFDM symbols transmitted at time $i-1$ and i respectively. The ith symbol is the symbol of interest, the previous symbol is included to model IBI. These symbols are transformed to the time domain by the inverse discrete Fourier transform (IDFT). A cyclic prefix (CP) of length ν is then added to the head of each symbol. The resulting time domain baseband signal $\mathbf{s}$ is given as:

$$\mathbf{s} = (\mathbf{I}_2 \otimes \mathbf{P})(\mathbf{I}_2 \otimes \mathbf{F}^{-1}) \begin{bmatrix} \mathbf{S}^{(i-1)^T} & \mathbf{S}^{(i)^T} \end{bmatrix}^T \quad (1)$$

where $\mathbf{P}$ is the cyclic prefix insertion matrix given by:

$$\mathbf{P} = \left[\begin{array}{c|c} 0_{(\nu\times N-\nu)} & \mathbf{I}_\nu \\ \hline & \mathbf{I}_N \end{array}\right]$$

This research work was carried out at the ESAT laboratory of the Katholieke Universiteit Leuven, in the frame of the Belgian Programme on Inter-university Attraction Poles, initiated by the Belgian Federal Science Policy Office, IUAP P5/11 ('Mobile multimedia communication systems and networks'). The Scientific responsibility is assumed by its authors.

When the signal $\mathbf{s}$ is transmitted through a frequency selective time invariant channel, then the received RF signal $\widetilde{\mathbf{r}}$ modulated at center frequency f_c is given as:

$$\widetilde{\mathbf{r}} = \Re\{\mathbf{r}.e^{\jmath 2\pi f_c.\mathbf{t}}\}$$

where $e^{\jmath \mathbf{x}}$ is the element-wise exponential function on the vector $\mathbf{x}$ and $\mathbf{t}$ is a time vector. $\mathbf{r}$ is the baseband representation of the received signal given as:

$$\begin{aligned}\mathbf{r} &= \mathbf{c} \star \mathbf{s} + \mathbf{n} \\ &= \mathbf{T}_c(\mathbf{I}_2 \otimes \mathbf{P})(\mathbf{I}_2 \otimes \mathbf{F}^{-1}) \begin{bmatrix} \mathbf{S}^{(i-1)^T} & \mathbf{S}^{(i)^T} \end{bmatrix}^T + \mathbf{n}\end{aligned} \tag{2}$$

where $\mathbf{r}$ is of dimension $(2N + 2\nu - L + 1 \times 1)$, $\mathbf{c}$ is the baseband representation of the channel of length L. $\mathbf{T}_c$ is an $(2N + 2\nu - L + 1 \times 2N + 2\nu)$ Toeplitz matrix with first column $[\mathbf{c}_{(L-1)}, 0_{(1\times 2N+2\nu-L)}]^T$ and first row $[\mathbf{c}_{(L-1)}, \ldots, \mathbf{c}_{(0)}, 0_{(1\times 2N+2\nu-L)}]$ and finally $\mathbf{n}$ is complex additive white Gaussian noise (AWGN).

We categorize the IQ imbalance resulting from the front-end of the receiver as frequency dependent (frequency selective) and frequency independent. The imbalances caused by mixers, low pass filters (LPFs), amplifiers and analog-to-digital converters (ADC) generally result in an overall frequency dependent IQ imbalance. We represent this imbalance by two mismatched filters with frequency responses given as $\mathbf{H}_{ri}$ and $\mathbf{H}_{rq}$. As the local oscillator (LO) produces only a single tone, the IQ imbalance caused by the LO can be generally categorized as frequency independent over the signal bandwidth with an amplitude and phase mismatch g_r and ϕ_r between the two branches. Following the derivation in [8], the baseband equivalent of the distorted and down-converted signal $\mathbf{z}$ can be written as:

$$\begin{aligned}\mathbf{z} &= \mathbf{g}_{r1} \star \mathbf{r} + \mathbf{g}_{r2} \star \mathbf{r}^* \\ &= [\mathbf{O}_1 | \mathbf{T}_{r1}]\mathbf{r} + [\mathbf{O}_1 | \mathbf{T}_{r2}]\mathbf{r}^*\end{aligned} \tag{3}$$

where

$$\mathbf{g}_{r1} = \mathbf{F}^{-1}\{\mathbf{G}_{r1}\} = \mathbf{F}^{-1}\left\{\frac{[\mathbf{H}_{ri} + g_r e^{-\jmath\phi_r}\mathbf{H}_{rq}]}{2}\right\}$$

$$\mathbf{g}_{r2} = \mathbf{F}^{-1}\{\mathbf{G}_{r2}\} = \mathbf{F}^{-1}\left\{\frac{[\mathbf{H}_{ri} - g_r e^{\jmath\phi_r}\mathbf{H}_{rq}]}{2}\right\}$$

Here $\mathbf{g}_{r1}$ and $\mathbf{g}_{r2}$ are filters of length L_r padded with $N - L_r$ zero elements. They represent the combined frequency independent and dependent receiver IQ imbalance. $\mathbf{z}$ is of size $(N \times 1)$, $\mathbf{O}_1 = 0_{(N\times N+2\nu-L-L_r+2)}$. $\mathbf{T}_{rd}$ (for $d = 1, 2$) is an $(N \times N + L_r - 1)$ Toeplitz matrix with first column $[\mathbf{g}_{rd(L_r-1)}, 0_{(1\times N-1)}]^T$ and first row $[\mathbf{g}_{rd(L_r-1)}, \ldots, \mathbf{g}_{rd(0)}, 0_{(1\times N-1)}]$. Equation (3) can also be written as:

$$\mathbf{z} = \mathbf{g}_{r1} \star \mathbf{c} \star \mathbf{s} + \mathbf{g}_{r2} \star \mathbf{c}^* \star \mathbf{s}^* + \mathbf{g}_{r1} \star \mathbf{n} + \mathbf{g}_{r2} \star \mathbf{n}^* \tag{4}$$

In the frequency domain, if the cyclic prefix is long enough ($\nu \geq L + L_r - 1$), then equation (4) can be given as:

$$\mathbf{Z} = \mathbf{G}_{r1}.\mathbf{C}.\mathbf{S}^{(i)} + \mathbf{G}_{r2}.\mathbf{C}_m^*.\mathbf{S}_m^{*(i)} + \mathbf{G}_{r1}.\widetilde{\mathbf{n}} + \mathbf{G}_{r2}.\widetilde{\mathbf{n}}_m^* \tag{5}$$

where $\mathbf{Z}, \mathbf{C}$ and $\widetilde{\mathbf{n}}$ are frequency domain representations of $\mathbf{z}, \mathbf{c}$ and $\mathbf{n}$. Here $()_m$ denotes the mirroring operation in which the vector indices are reversed, such that $\mathbf{S}_m[l] = \mathbf{S}[l_m]$ where $l_m = 2 + N - l$ for $l = 2 \ldots N$ and $l_m = l$ for $l = 1$. Equation (5) shows that due to the IQ imbalance, power leaks from the signal on the mirror carrier ($\mathbf{S}_m^{*(i)}$) to the carrier under consideration ($\mathbf{S}^{(i)}$) leading to inter-carrier-interference (ICI). In the case when the cyclic prefix is not long enough ($\nu < L + L_r - 1$), then in addition to ICI there is also interference from the adjacent OFDM symbol $\mathbf{S}^{(i-1)}$, leading to IBI.

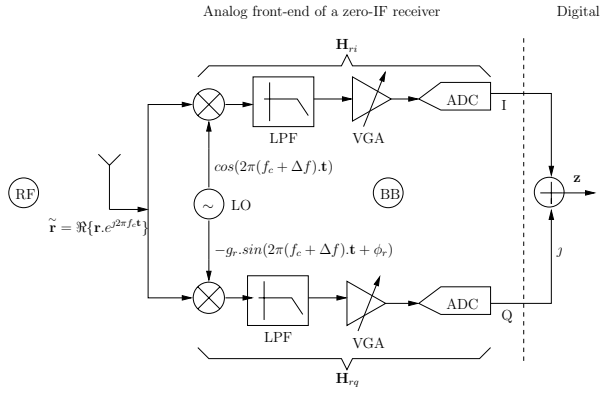

Fig. 1. Model of a zero-IF receiver with IQ imbalance and CFO.

A carrier frequency offset occurs in the system when there is a deviation in the generation of the standard carrier frequency between the transmitter and receiver local oscillators. Assume a CFO Δf is present in the OFDM system together with receiver IQ imbalance, then the resulting baseband signal can be written as [9]:

$$\begin{aligned}\mathbf{z} =& \mathbf{g}_{r1} \star (\mathbf{r}.e^{\jmath 2\pi\Delta f.\mathbf{t}}) + \mathbf{g}_{r2} \star (\mathbf{r}^*.e^{-\jmath 2\pi\Delta f.\mathbf{t}}) \\ &= (\widetilde{\mathbf{g}}_{r1} \star \mathbf{r}).e^{\jmath 2\pi\Delta f.\mathbf{t}} + (\widetilde{\mathbf{g}}_{r2} \star \mathbf{r}^*).e^{-\jmath 2\pi\Delta f.\mathbf{t}}\end{aligned} \tag{6}$$

where $\widetilde{\mathbf{g}}_{rd}$ (for $d = 1, 2$) $= \mathbf{g}_{rd}.(e^{\jmath 2\pi\Delta f.(0\ldots(L_r-1))})^{-1}$. **Figure 1** illustrates the front-end of a zero-IF receiver with IQ imbalance and CFO. The joint effect of both receiver IQ imbalance along with CFO results in a severe performance degradation, as will be shown in section 5, and so a digital compensation scheme is needed.

3. IQ IMBALANCE AND CFO COMPENSATION

We assume that the CFO can be estimated accurately in the OFDM system. In practice, several CFO estimation schemes indeed exist that are found to be sufficiently robust against the IQ imbalance [9], [10] and [15]. Thus, given a good estimate of Δf, we can perform an element wise multiplication of the estimated negative frequency offset $e^{-\jmath 2\pi\Delta f.\mathbf{t}}$ with the received distorted symbol as well as with its conjugate, leading to:

$$\mathbf{z}_1 \stackrel{\triangle}{=} \mathbf{z}.e^{-\jmath 2\pi\Delta f.\mathbf{t}} = \underbrace{(\widetilde{\mathbf{g}}_{r1} \star \mathbf{r})}_{\mathbf{p}} + \underbrace{(\widetilde{\mathbf{g}}_{r2} \star \mathbf{r}^*).e^{-2\jmath 2\pi\Delta f.\mathbf{t}}}_{\mathbf{q}} \tag{7}$$

and

$$\mathbf{z}_2 \stackrel{\triangle}{=} \mathbf{z}^*.e^{-\jmath 2\pi\Delta f.\mathbf{t}} = \underbrace{(\widetilde{\mathbf{g}}_{r2}^* \star \mathbf{r})}_{\mathbf{p}} + \underbrace{(\widetilde{\mathbf{g}}_{r1}^* \star \mathbf{r}^*).e^{-2\jmath 2\pi\Delta f.\mathbf{t}}}_{\mathbf{q}} \tag{8}$$

Both the signals $\mathbf{z_1}$ and $\mathbf{z_2}$ consist of two parts named '$\mathbf{p}$' the desired part and '$\mathbf{q}$' the undesired part. This is because in frequency domain, the former gives rise to the desired signal, while the latter yields a mirror image and causes ICI (because of the complex conjugate), subject to leakage caused by the exponential term ($e^{-2\jmath 2\pi\Delta f.\mathbf{t}}$).

In order to eliminate the undesired part **q** from equations (7) and (8), we first propose a compensation scheme based on two TEQs $\mathbf{w}_1$ and $\mathbf{w}_2$ each with L' taps. If the cyclic prefix is sufficiently long ($\nu \geq L + L_r - 1$) then typically $L' = L_r$ taps is sufficient. For the case of an insufficiently long cyclic prefix ($\nu < L + L_r - 1$), L' is chosen longer in order to shorten the combined channel and receiver filter impulses ($\mathbf{c} \star \widetilde{\mathbf{g}}_{r1}$) and ($\mathbf{c} \star \widetilde{\mathbf{g}}_{r2}$) to fit within the cyclic prefix.

The TEQ $\mathbf{w}_1$ is applied to the signal $\mathbf{z}_1$ and TEQ $\mathbf{w}_2$ to the signal $\mathbf{z}_2$. Now $\mathbf{z}$ in equation (3) is of size $(N + L' - 1 \times 1)$, where $\mathbf{O}_1 = 0_{(N+L'-1 \times N+2\nu-L-L_r-L'+3)}, \mathbf{T}_{rd}$ (for $d = 1, 2$) is of size $(N + L' - 1 \times N + L_r + L' - 2)$ with first column $[\mathbf{g}_{rd(L_r-1)}, 0_{(1\times N+L'-2)}]^T$ and first row $[\mathbf{g}_{rd(L_r-1)}, \ldots, \mathbf{g}_{rd(0)}, 0_{(1\times N+L'-2)}]$. This leads to:

$$\begin{aligned}\mathbf{z}_t &= \mathbf{w}_1^* \star \mathbf{z}_1 - \mathbf{w}_2^* \star \mathbf{z}_2 \\ &= \underbrace{(\mathbf{w}_1^* \star \widetilde{\mathbf{g}}_{r1} - \mathbf{w}_2^* \star \widetilde{\mathbf{g}}_{r2}^*)}_{\mathbf{f}_1} \star \mathbf{r} + \\ &\underbrace{\mathbf{w}_1^* \star ((\widetilde{\mathbf{g}}_{r2} \star \mathbf{r}^*).e^{-2\jmath 2\pi\Delta f.\mathbf{t}}) - \mathbf{w}_2^* \star ((\widetilde{\mathbf{g}}_{r1}^* \star \mathbf{r}^*).e^{-2\jmath 2\pi\Delta f.\mathbf{t}})}_{\mathbf{f}_2}\end{aligned} \tag{9}$$

where the design target for $\mathbf{w}_1$ and $\mathbf{w}_2$ is that the second term $\mathbf{f}_2$ vanishes, while $\mathbf{f}_1$ is (approximately) shorter than the cyclic prefix. Here $\mathbf{z}_t$ is of size $(N \times 1)$. In addition to the TEQs, a one tap frequency domain equalizer (FEQ) is applied to the received sequence to recover the transmitted OFDM symbol. This scheme is shown in **Figure 2(a)**. We define $\widetilde{\mathbf{S}}^{(i)}[l]$ as the estimate for lth subcarrier of the ith OFDM symbol. This estimate is then obtained as:

$$\widetilde{\mathbf{S}}^{(i)}[l] = \mathbf{v}^*[l].\mathbf{F}[l](\mathbf{W}_1^H\mathbf{z}_1 - \mathbf{W}_2^H\mathbf{z}_2) \tag{10}$$

where $\mathbf{v}[l]$ is the 1-tap FEQ operating on the lth sub-carrier, and $\mathbf{F}[l]$ is the lth row of the DFT matrix $\mathbf{F}$. $\mathbf{W}_d$ (for $d = 1, 2$) is an $(N + L' - 1 \times N)$ Toeplitz matrix with first column $[\mathbf{w}_{d,L'-1}, \ldots, \mathbf{w}_{d,0}, 0_{(1\times N-1)}]$ and first row $[\mathbf{w}_{d,L'-1}, 0_{(1\times N-1)}]$.

Following the derivation in [11], the two TEQs thus obtained can be transformed to the frequency domain resulting in two per-tone equalizers (PTEQs) each employing one DFT and $L' - 1$ difference terms. With this transformation the difficult channel shortening problem is avoided and replaced by simple per-tone optimization problem. Equation (10) is then modified as follows:

$$\widetilde{\mathbf{S}}^{(i)}[l] = \mathbf{v}_1^H[l]\mathbf{F}_i[l]\mathbf{z}_1 - \mathbf{v}_2^H[l]\mathbf{F}_i[l]\mathbf{z}_2 \tag{11}$$

where $\mathbf{v}_k[l]$ for $k = 1, 2$ are PTEQs of size $(L' \times 1)$. $\mathbf{F}_i[l]$ is defined as:

$$\mathbf{F}_i[l] = \left[\begin{array}{c|c|c} \mathbf{I}_{L'-1} & 0_{L'-1\times N-L'+1} & -\mathbf{I}_{L'-1} \\ \hline 0_{1\times L'-1} & \mathbf{F}[l] & \end{array}\right]$$

where the first block row in $\mathbf{F}_i[l]$ is seen to extract the difference terms, while the last row corresponds to the single DFT. The PTEQ block scheme is shown in **Figure 2(b)**. The PTEQ coefficients for the lth subcarrier can be obtained based on the following MSE minimization:

$$min_{(\mathbf{v}_1[l],\mathbf{v}_2[l])}\mathbb{E}\left\{\left|\mathbf{S}^{(i)}[l] - \begin{bmatrix}\mathbf{v}_1^H[l] & -\mathbf{v}_2^H[l]\end{bmatrix}\begin{bmatrix}\mathbf{F}_i[l]\mathbf{z}_1 \\ \mathbf{F}_i[l]\mathbf{z}_2\end{bmatrix}\right|^2\right\} \tag{12}$$

where $\mathbb{E}\{.\}$ is the expectation operator.

4. ADAPTIVE COMPENSATION

In this section, we will derive a training based RLS algorithm for direct initialization of the PTEQ coefficients based on (12). The RLS algorithm provides optimal convergence and achieves initialization with an acceptably small number of training symbols. Let k be the number of OFDM symbols dedicated for training. The RLS algorithm to compute the coefficient vector for subcarrier l is shown in **Algorithm 1**. Let $\mathbf{v}_1^{(i)}[l]$ and $\mathbf{v}_2^{(i)}[l]$ represent the equalization vectors at time instant i. The regularization factor δ is a small positive constant and $\mathbf{D}^{(i)}$ is the training symbol transmitted at time instant i.

Algorithm 1 RLS direct equalization

Initialize the algorithm by setting

$$\begin{aligned}\mathbf{v}_1^{(i=0)} &= 0_{L'\times N} \\ \mathbf{v}_2^{(i=0)} &= 0_{L'\times N}\end{aligned}$$

For all the carriers in OFDM symbol $l = 1 \ldots N$ compute

$$\mathbf{B}^{(i=0)} = \delta^{-1}\mathbf{I}_{2L'\times 2L'}$$

For each iteration $i = 1 \ldots k$ compute

$$\begin{aligned}\mathbf{u}^{(i)}[l] &= \begin{bmatrix}\mathbf{F}_i[l]\mathbf{z}_1^{(i)} & \mathbf{F}_i[l]\mathbf{z}_2^{(i)}\end{bmatrix}^T \\ \xi^{(i)} &= \mathbf{D}^{(i)}[l] - \begin{bmatrix}\mathbf{v}_1^{H(i-1)}[l] & \mathbf{v}_2^{H(i-1)}[l]\end{bmatrix}\mathbf{u}^{(i)}[l] \\ \mathbf{B}_1^{(i)} &= \frac{\mathbf{B}^{(i)}\mathbf{u}^{(i)}[l]}{1 + \mathbf{u}^{H(i)}[l]\mathbf{B}^{(i)}\mathbf{u}^{(i)}[l]} \\ \mathbf{v}_1^{(i)}[l] &= \mathbf{v}_1^{(i-1)}[l] + (\mathbf{B}_{1,(1\ldots L')}^{(i)} * \xi^{*(i)})^T \\ \mathbf{v}_2^{(i)}[l] &= \mathbf{v}_2^{(i-1)}[l] + (\mathbf{B}_{1,(L'+1\ldots 2L')}^{(i)} * \xi^{*(i)})^T \\ \mathbf{B}^{(i)} &= \mathbf{B}^{(i-1)} - \mathbf{B}_1^{(i-1)}\mathbf{u}^{H(i)}[l]\mathbf{B}^{(i-1)}\end{aligned}$$

At the end of the training the weights $\mathbf{v}_1[l]$ and $\mathbf{v}_2[l]$ are substituted in formula (11) to obtain the transmitted symbol estimates $\widetilde{\mathbf{S}}^{(i)}[l]$.

5. SIMULATION RESULTS

A typical OFDM system (similar to IEEE 802.11a) is simulated to evaluate the performance of the compensation scheme for frequency dependent and independent receiver IQ imbalance under CFO. The performance comparison is made with an ideal system with no front-end distortion and with a system with no compensation algorithm included.

The parameters used in the simulation are as follows: OFDM symbol length $N = 64$, cyclic prefix length $\nu = 8$. The receiver filter impulse response are $\mathbf{h}_{ri} = [0.1\ 0.5\ 0.9], \mathbf{h}_{rq} = [0.9\ 0.5\ 0.1]$. The frequency independent amplitude imbalance of $g_r = 5\%$ and phase imbalance of $\phi_r = 5^\circ$. It should be noted that the imbalance level in this case may be higher than the level observed in a practical receiver. However we consider such an extreme case to evaluate the robustness/effectiveness of the proposed compensation scheme.

For CFO, the standard [2] specifies a maximum tolerable frequency deviation of 20 ppm. For a local oscillator operating between 5 and 6 GHz, this translates in a maximum $\Delta f \approx 240kHz$. For the simulation, we consider $\Delta f = 100kHz$. The CFO is usually considered as the ratio ζ of the actual carrier frequency offset Δf to the

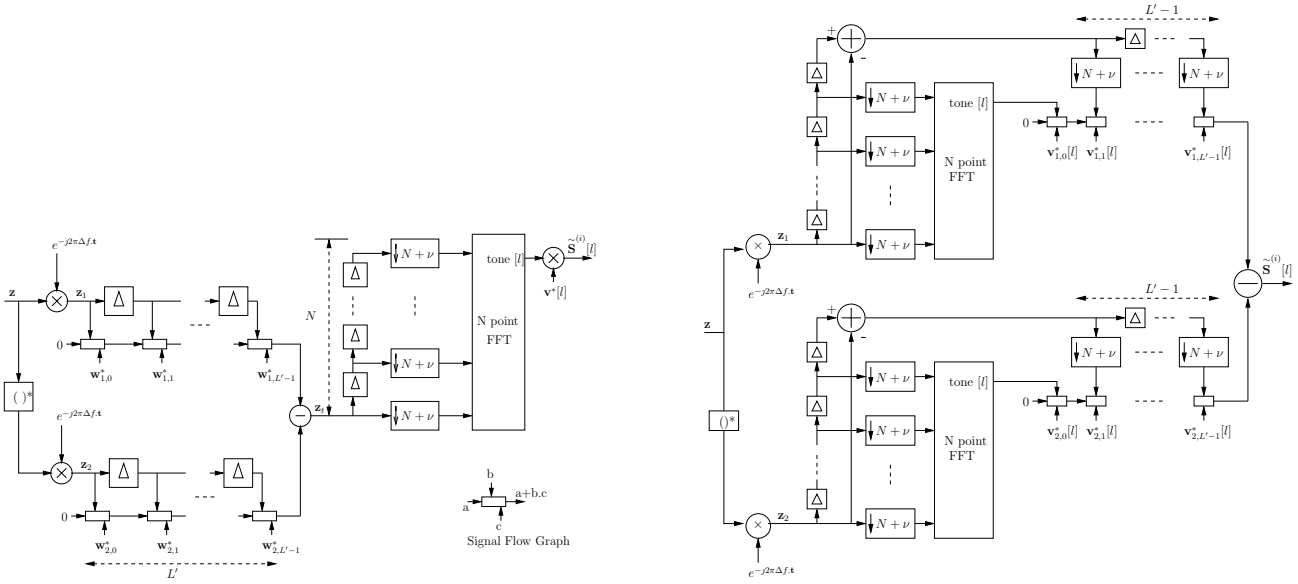

(a) L' tap TEQs with 1 tap FEQ per-tone

(b) L' tap PTEQs per-tone

Fig. 2. Compensation scheme for OFDM with frequency selective IQ imbalance and CFO

subcarrier spacing $1/T.N$, i.e., $\zeta = T.N.\Delta f$, where T is the sampling period. In our case, the subcarrier spacing is $312.5kHz$, thus ζ is 0.32.

There are 3 different channel profiles: 1) an additive white Gaussian noise (AWGN) channel with a single tap unity gain, 2) a multipath channel with $L = 4$. In both the cases 1 and 2, $(L+L_r-1 < \nu)$ and a PTEQ with $L' = L_r$ taps is sufficient for compensation. In our case $L_r = 3$. 3) A multipath channel with $L = 10$ taps $(L + L_r - 1 > \nu)$. In this case PTEQ with $L' = 10$ and $L' = 15$ taps are used. The taps of the multipath channel are chosen independently with complex Gaussian distribution.

Figure 3 (a),(b) and (c) shows the performance curves (BER vs SNR) for an uncoded 64QAM OFDM system. Every channel realization is independent of the previous one and the BER results depicted are obtained by averaging the BER curves over 10^4 independent channels. With no compensation scheme in place, the OFDM system is completely unusable. Even for the case when there is only frequency independent IQ imbalance, the BER is very high. In the presence of frequency selective IQ imbalance and CFO, the system is completely unusable. For the case $(\nu < L + L_r - 1)$, a good performance close to the ideal case is obtained when $L' = 15$. This is also illustrated in **Figure 3 (d)** which shows the convergence of PTEQ weights for 50 BPSK training symbols in a noiseless scenario. For the case $L' = 15$, all the 15 PTEQ weights for one of the OFDM symbol tone chosen randomly (tone=10), converge after 30 training symbols (solid lines with circles). Whereas for $L' = 3$, the PTEQ weights do not converge (solid lines), hence for this case a 3 tap PTEQ is not sufficient to provide an MMSE solution. Thus a PTEQ with a sufficient number of taps is essential to shorten the combined channel and receiver filter impulse response and also to compensate for the channel and front-end distortions. The compensation performance depends on how accurately the adaptive equalizer coefficients can converge to the ideal values.

6. CONCLUSION

In this paper the joint effect of receiver frequency selective IQ imbalance, CFO and multipath channel distortions has been studied and an algorithm has been developed to compensate for such distortions in the digital domain. The PTEQ solution proposed is also applicable in those cases where the cyclic prefix is not sufficiently long to accommodate the channel and receiver filter impulse. The algorithm provides a very efficient, post-FFT adaptive equalization and compensation which leads to near ideal performance.

7. REFERENCES

[1] J.Bingham, "Multi-carrier modulation for data transmission: An idea whose time has come", *IEEE Communications Magazine*, pp. 5-14, May 1990.

[2] "IEEE standard 802.11a-1999: wireless LAN medium access control (MAC) & physical layer (PHY) specifications, high-speed physical layer in the 5 GHz band," 1999.

[3] I.Koffman and V.Roman, "Broadband wireless access solutions based on OFDM access in IEEE 802.16," *IEEE Communications Magazine*, vol. 40, no. 4, pp. 96-103, April 2002.

[4] "ETSI Digital Video Broadcasting; Framing structure, Channel Coding & Modulation for Digital TV," 2004.

[5] P.Shelswell, "The COFDM modulation system: the heart of digital audio broadcasting", *IEE Electronics and Communication Engineering Journal*, vol. 7, no. 3, pp. 127-136, June 1995.

[6] T.Pollet, M. Van Bladel and M. Moeneclaey, "BER sensitivity of OFDM systems to carrier frequency offset and wiener phase noise", *IEEE Transactions on Communications*, vol. 43, no. (2/3/4), pp. 191-193, 1995.

[7] A.Tarighat, R.Bagheri and A.H.Sayed, "Compensation schemes and performance analysis of IQ imbalances in OFDM re-

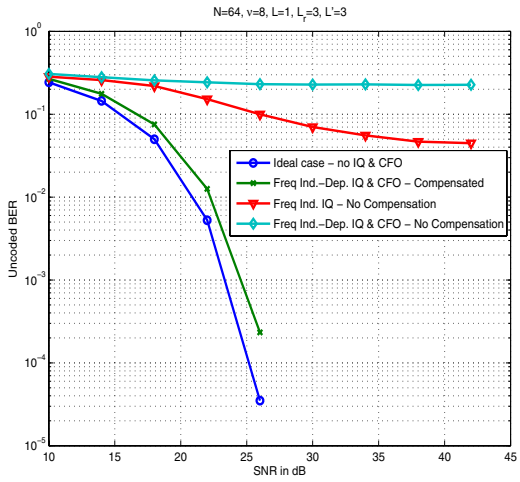

(a) BER vs SNR for AWGN flat channel (non-fading)

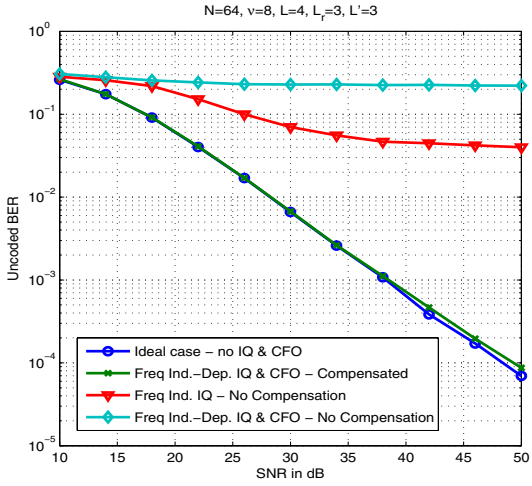

(b) BER vs SNR for 4-tap Rayleigh fading channel (fading)

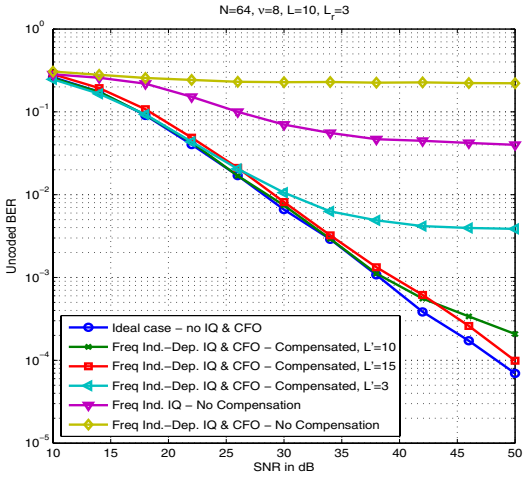

(c) BER vs SNR for 10-tap Rayleigh fading channel (fading)

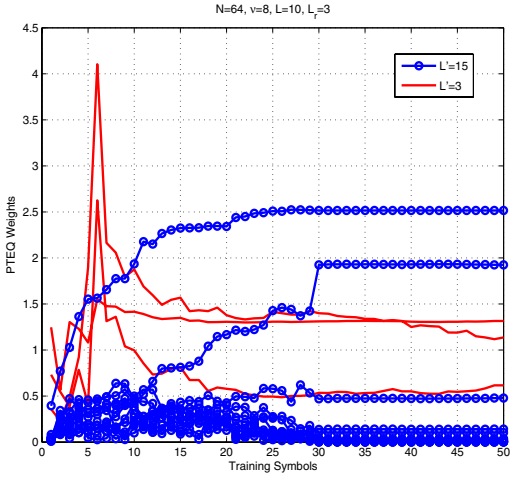

(d) PTEQ weights convergence for 10-tap Rayleigh fading channel (fading and noiseless scenario)

Fig. 3. Simulation results for OFDM with 64QAM constellation.

ceivers," *IEEE Trans. on Signal Processing*, vol. 53, no. 8, Aug 2005.

[8] M.Valkama,M.Renfors and V.Koivunen, "Compensation of frequency-selective IQ imbalances in wideband receivers: models and algorithms," *Proceedings IEEE 3rd Workshop on Signap Processing Advances in Wireless Communications (SPAWC)*, Taoyuan, Taiwan, Mar. 2001, pp. 42-45.

[9] J.Tubbax, B.Come, L.Van der Perre, M.Engels, M.Moonen and H.De Man, "Joint compensation of IQ imbalance and carrier frequency offset in OFDM systems," *Proceedings Radio and Wireless Conference*, Boston, MA, Aug. 2003, pp. 39-42.

[10] G.Xing, M. Shen and H. Liu, "Frequency offset and I/Q imbalance compensation for Direct-Conversion Receivers," *IEEE Transactions on Wireless Communications*, vol. 4, no. 2. pp. 673-680, March 2005.

[11] K.van Acker, G.Leus and M.Moonen,"Per-tone equalization for DMT based systems," *IEEE Transactions on Communications*, vol. 49, no. 1, Jan. 2001.

[12] D.Tandur and M.Moonen, "Joint compensation of OFDM transmitter and receiver IQ imbalance in the presence of carrier frequency offset," *European Signal Processing Conference (EUSIPCO)*, Florence, Italy, Sep. 2006.

[13] D.Tandur and M.Moonen, "Joint adaptive compensation of transmitter and receiver IQ imbalance under CFO in OFDM based systems", *Accepted for publication in IEEE Transactions on Signal Processing*, 2007.

[14] D.Tandur and M.Moonen, "Joint compensation of OFDM frequency selective transmitter and receiver IQ imbalance", *IEEE Proceedings International Conference on Acoustics, Speech and Signal Processing (ICASSP)*, Honolulu, Hawaii, April 2007.

[15] S.Fouladifard and H.Shafiee, "Frequency offset estimation in OFDM systems in presence of IQ imbalance," *Proceeding International Conference on Communications*, Anchorage, AK, May 2003, pp. 2071-2075.