DIGITAL COMPENSATION OF RF IMPERFECTIONS FOR BROADBAND WIRELESS SYSTEMS

Deepaknath Tandur and Marc Moonen

Katholieke Universiteit Leuven, E.E. Dept., Kasteelpark Arenberg 10, B-3001 Heverlee, Belgium
Email: {deepaknath.tandur,marc.moonen }@esat.kuleuven.be

ABSTRACT

In this paper we propose a generally applicable frequency-domain equalization and radio frequency (RF) imperfection compensation technique for orthogonal frequency division multiplexing (OFDM) transmission over frequency-selective channels. Radio frequency (RF) imperfections, such as in-phase/quadrature-phase (IQ) imbalance and carrier frequency offset (CFO) are important issues in today's wireless broadband systems. Due to component imperfections in practical analog electronics such imbalances are unavoidable, resulting in an overall performance degradation of the system. In this paper the joint effect of frequency selective IQ imbalance at both transmitter and receiver end along with CFO is studied for OFDM based transmission. We also consider the general case when the cyclic prefix is not sufficiently long to accommodate the channel impulse response combined with the transmitter and receiver filter, which results in inter-block-interference (IBI) between the OFDM symbols.

1. INTRODUCTION

Orthogonal Frequency Division Multiplexing (OFDM) is a very popular and standardized modulation technique for broadband wireless systems [1]. These days a lot of effort is spent in developing integrated, cost and power efficient OFDM systems. The direct-conversion (or zero-IF) based architecture provides a good implementation alternative as it has a small form factor compared to the traditional architecture [2]. However, the direct-conversion based systems are very sensitive to component imperfections which is sometimes unavoidable due to manufacturing defects, etc. These analog imperfections generally lead to radio frequency (RF) impairments such as in-phase/ quadrature-phase (IQ) imbalance and carrier frequency offset (CFO). The result could be a severe degradation in performance especially when high-order modulation schemes (64QAM) are considered. Rather than decreasing the effects of RF impairments by increasing the design time and the component cost of the analog processing, these impairments can also be tolerated and then compensated digitally.

Several articles [3]-[11] have been published to study the effects of these impairments and develop their compensation scheme digitally. The performance degradation due to receiver IQ imbalance and CFO in OFDM systems has been investigated in [3]-[7]. A joint compensation algorithm for frequency independent (constant over frequency) transmitter and receiver IQ imbalance and a frequency selective transmitter and receiver IQ imbalance over residual frequency offset have been developed in [8] and [9]. The compensation of CFO along with frequency independent transmitter and receiver IQ imbalance has been proposed in [10]. In [11], we proposed an adaptive frequency domain equalization for joint compensation of frequency selective transmitter and receiver IQ imbalance over insufficient cyclic prefix (CP) length.

This paper extends all previously developed schemes by providing a general compensation solution for joint frequency selective transmitter and receiver IQ imbalance in the presence of CFO and channel distortions. We also consider the case when CP is not sufficiently long to accommodate the combined channel, transmitter and receiver filter impulse response, which results in inter-block-interference (IBI) between adjacent OFDM symbols. In this case a PTEQ is designed to shorten the combined impulse response to fit within the CP [12] and at the same time also compensate the analog front-end imperfection along with channel distortions. The PTEQ enables a true per-tone signal-to-noise ratio (SNR) optimization, because the equalization of one carrier is independent of the equalization of other carriers.

The paper is organized as follows: We first develop the imput-output system model in Section 2. Section 3 explains the IQ and CFO compensation scheme. Simulation results are shown in section 4 and finally conclusions are given in section 5.

Notation: Vectors are indicated in bold and scalar parameters in normal font. Superscripts $^*, ^T, ^H$ represent conjugate, transpose and hermitian respectively. $\mathbf{F}$ and $\mathbf{F}^{-1}$ represent the $N \times N$ discrete Fourier transform and its inverse. $\mathbf{I}_N$ is the $N \times N$ identity matrix and $0_{M\times N}$ is the $M \times N$ all zero matrix. Operators $\otimes$, $\star$ and . denote Kronecker product, convolution and component-wise vector multiplication respectively.

2. SYSTEM MODEL

Let $\mathbf{S}^{(i)}$ be a frequency domain OFDM symbol of size $(N \times 1)$ where i is the time index of the symbol. We consider two successive OFDM symbols transmitted at time $i-1$ and i respectively. The ith symbol is the symbol of interest, the previous symbol is included to model IBI. These symbols are transformed to the time domain by the inverse discrete Fourier transform (IDFT). A cyclic prefix (CP) of length ν is then added to the head of each symbol. The resulting time domain baseband signal $\mathbf{s}$ is given as:

$$\mathbf{s} = (\mathbf{I}_2 \otimes \mathbf{P})(\mathbf{I}_2 \otimes \mathbf{F}^{-1}) \begin{bmatrix} \mathbf{S}^{(i-1)^T} & \mathbf{S}^{(i)^T} \end{bmatrix}^T \quad (1)$$

where $\mathbf{P}$ is the cyclic prefix insertion matrix given by:

$$\mathbf{P} = \left[\begin{array}{c|c} 0_{(\nu\times N-\nu)} & \mathbf{I}_\nu \\ \hline & \mathbf{I}_N \end{array}\right]$$

We categorize the IQ imbalance resulting from the front-end as frequency selective (FS) and frequency independent (FI). The analog

This research work was carried out at the ESAT laboratory of the Katholieke Universiteit Leuven and was funded within the framework of DOC-DB scholarship. The scientific responsibility is assumed by its authors.

components such as digital-to-analog converters (DAC), amplifiers, low pass filters (LPFs) and mixers generally result in an overall FS IQ imbalance. We represent this imbalance at the transmit antenna by two mismatched filters with frequency responses given as $\mathbf{H}_{ti} = \mathbf{F}\{\mathbf{h}_{ti}\}$ and $\mathbf{H}_{tq} = \mathbf{F}\{\mathbf{h}_{tq}\}$. The imbalance induced by the LO can be generally considered FI over the signal bandwidth with a transmitter amplitude and phase mismatch g_t and ϕ_t between the two branches. Following the derivation in [4], the baseband signal $\mathbf{p}$ after front-end distortion can be given as:

$$\mathbf{p} = \mathbf{g}_{t1} \star \mathbf{s} + \mathbf{g}_{t2} \star \mathbf{s}^* \tag{2}$$

where

$$\mathbf{g}_{t1} = \mathbf{F}^{-1}\{\mathbf{G}_{t1}\} = \mathbf{F}^{-1}\left\{\frac{\left[\mathbf{H}_{ti} + g_t e^{-j\phi_t}\mathbf{H}_{tq}\right]}{2}\right\}$$
$$\mathbf{g}_{t2} = \mathbf{F}^{-1}\{\mathbf{G}_{t2}\} = \mathbf{F}^{-1}\left\{\frac{\left[\mathbf{H}_{ti} - g_t e^{j\phi_t}\mathbf{H}_{tq}\right]}{2}\right\}$$

Here $\mathbf{g}_{t1}$ and $\mathbf{g}_{t2}$ are mostly truncated to length L_t and then padded with $N - L_t$ zero elements. They represent the combined frequency independent and dependent transmitter IQ imbalance. Note also that $\mathbf{g}_{t2}$ vanishes if $g_t = 1$, $\phi_t = 0$ and $\mathbf{H}_{ti} = \mathbf{H}_{tq}$.

When the signal $\mathbf{p}$ is transmitted through a frequency selective time invariant channel $\mathbf{c}$ of length L, then the received baseband signal $\widetilde{\mathbf{r}}$ is given as:

$$\begin{aligned}\mathbf{r} &= \mathbf{c} \star \mathbf{p} + \mathbf{n} \\ &= \mathbf{c} \star \mathbf{g}_{t1} \star \mathbf{s} + \mathbf{c} \star \mathbf{g}_{t2} \star \mathbf{s}^* + \mathbf{n} \\ &= \mathbf{c}_1 \star \mathbf{s} + \mathbf{c}_2 \star \mathbf{s}^* + \mathbf{n}\end{aligned} \tag{3}$$

where $\mathbf{c}$ is the baseband representation of the channel of length L, $\mathbf{c}_1$ and $\mathbf{c}_2$ are the combined transmitter IQ and channel impulse responses of length $L + L_t - 1$ and $\mathbf{n}$ is proper complex additive white Gaussian noise (AWGN). Finally, an expression similar to equation (2) can be used to model IQ imbalance at the receiver. Let $\mathbf{z}$ represent the down-converted baseband complex signal after being distorted by combined frequency dependent and independent receiver IQ imbalance $\mathbf{g}_{r1}$ and $\mathbf{g}_{r2}$ of length L_r. Then $\mathbf{z}$ will be given as:

$$\mathbf{z} = \mathbf{g}_{r1} \star \mathbf{r} + \mathbf{g}_{r2} \star \mathbf{r}^* \tag{4}$$

Equation (3) can be substituted in equation (4) leading to

$$\begin{aligned}\mathbf{z} =&(\mathbf{g}_{r1} \star \mathbf{c}_1 + \mathbf{g}_{r2} \star \mathbf{c}_2^*) \star \mathbf{s} + (\mathbf{g}_{r1} \star \mathbf{c}_2 + \mathbf{g}_{r2} \star \mathbf{c}_1^*) \star \mathbf{s}^* \\ &+ \mathbf{g}_{r1} \star \mathbf{n} + \mathbf{g}_{r2} \star \mathbf{n}^* \\ =&\mathbf{d}_1 \star \mathbf{s} + \mathbf{d}_2 \star \mathbf{s}^* + \mathbf{n}_c\end{aligned} \tag{5}$$

where $\mathbf{d}_1$ and $\mathbf{d}_2$ are the combined transmitter IQ, channel and receiver IQ impulse responses of length $L_t + L + L_r - 2$ and $\mathbf{n}_c$ is now a zero mean improper complex noise vector due to the presence of receiver IQ imbalance [13]. Substituting equation (1) in equation (5) we obtain:

$$\begin{aligned}\mathbf{z} =&[\mathbf{O}_1|\mathbf{T}_{d1}](\mathbf{I}_2 \otimes \mathbf{P})(\mathbf{I}_2 \otimes \mathbf{F}^{-1})\begin{bmatrix}\mathbf{S}^{(i-1)} \\ \mathbf{S}^{(i)}\end{bmatrix} \\ &+ [\mathbf{O}_1|\mathbf{T}_{d2}](\mathbf{I}_2 \otimes \mathbf{P})(\mathbf{I}_2 \otimes \mathbf{F}^{-1})\begin{bmatrix}\mathbf{S}_m^{*(i-1)} \\ \mathbf{S}_m^{*(i)}\end{bmatrix} + \mathbf{n}_c\end{aligned} \tag{6}$$

where $\mathbf{z}$ is of dimension $(N \times 1)$, $\mathbf{O}_1 = 0_{(N\times N+2\nu-L_T-L-L_r+3)}$. $\mathbf{T}_{dk}$ (for $k = 1, 2$) is an $(N \times N + L_t + L + L_r - 3)$ Toeplitz matrix with first column $[\mathbf{d}_{k(L_t+L+L_r-3)}, 0_{(1\times N-1)}]^T$ and first row $[\mathbf{d}_{k(L_t+L+L_r-3)}, \ldots, \mathbf{d}_{k(0)}, 0_{(1\times N-1)}]$. Here $()_m$ denotes the mirroring operation in which the vector indices are reversed, such that $\mathbf{S}_m[l] = \mathbf{S}[l_m]$ where $l_m = 2 + N - l$ for $l = 2 \ldots N$ and $l_m = l$ for $l = 1$.

In the frequency domain, if the CP is long enough ($\nu \geq L_t + L + L_r - 2$), then equation (6) can be given as:

$$\begin{aligned}\mathbf{Z} =&\mathbf{D}_1.\mathbf{S}^{(i)} + \mathbf{D}_2.\mathbf{S}_m^{*(i)} + \widetilde{\mathbf{n}}_c \\ =&(\mathbf{G}_{r1}.\mathbf{G}_{t1}.\mathbf{C} + \mathbf{G}_{r2}.\mathbf{G}_{t2m}^*.\mathbf{C}_m^*).\mathbf{S}^{(i)} \\ &+ (\mathbf{G}_{r1}.\mathbf{G}_{t2}.\mathbf{C} + \mathbf{G}_{r2}.\mathbf{G}_{t1m}^*.\mathbf{C}_m^*).\mathbf{S}_m^{*(i)} + \mathbf{G}_{r1}.\widetilde{\mathbf{n}} + \mathbf{G}_{r2}.\widetilde{\mathbf{n}}_m^*\end{aligned} \tag{7}$$

where $\mathbf{Z}, \mathbf{D}_1, \mathbf{D}_2, \mathbf{G}_{r1}, \mathbf{G}_{r2}, \mathbf{C}, \widetilde{\mathbf{n}}_c$ and $\widetilde{\mathbf{n}}$ are frequency domain representations of $\mathbf{z}, \mathbf{d}_1, \mathbf{d}_2, \mathbf{g}_{r1}, \mathbf{g}_{r2}, \mathbf{c}, \mathbf{n}_c$ and $\mathbf{n}$. Equation (7) shows that due to the transmitter and receiver IQ imbalance, power leaks from the signal on the mirror carrier ($\mathbf{S}_m^*$) to the carrier under consideration ($\mathbf{S}$) and thus causes inter-carrier-interference (ICI). In the case when the CP is not long enough ($\nu < L_t + L + L_r - 2$), then in addition to ICI there is also interference from the adjacent OFDM symbol $\mathbf{S}^{(i-1)}$, leading to IBI.

A system suffers from CFO distortion when there is a deviation in the generation of standard carrier frequency f_c between the transmitter and receiver local oscillators. Assume CFO Δf is present in an OFDM system together with transmitter and receiver IQ imbalance, then the resulting baseband signal can be written as [10]:

$$\mathbf{z} = \mathbf{g}_{r1} \star (\mathbf{r}.e^{j2\pi\Delta f.\mathbf{t}}) + \mathbf{g}_{r2} \star (\mathbf{r}^*.e^{-j2\pi\Delta f.\mathbf{t}}) \tag{8}$$

where $e^{j\mathbf{x}}$ is the element-wise exponential function on the vector $\mathbf{x}$ and $\mathbf{t}$ is a time vector. **Figure 1** illustrates the mathematical model of transmitter and receiver front-end with IQ imbalance, CFO and channel distortions. The joint effect of both transmitter and receiver IQ imbalance along with CFO results in a severe performance degradation, as will be shown in section 4, and so a digital compensation scheme is needed.

3. IQ IMBALANCE AND CFO COMPENSATION

3.1. TEQ based compensation

In order to compensate for the channel and RF distortions, we first propose a compensation scheme based on two time domain equalizers (TEQs) $\mathbf{w}_1$ and $\mathbf{w}_2$ each with L' taps. If CP is sufficiently long ($\nu \geq L_t + L + L_r - 2$) then typically $L' = L_r$ taps is sufficient. For the case of an insufficiently long CP ($\nu < L_t + L + L_r - 2$), L' is chosen longer in order to shorten the combined channel, transmitter and receiver filter impulses to fit within the cyclic prefix. The TEQ $\mathbf{w}_1$ is applied to the signal $\mathbf{z}$ and TEQ $\mathbf{w}_2$ to the signal $\mathbf{z}^*$. Now $\mathbf{z}$ in equation (6) is of size $(N + L' - 1 \times 1)$, where $\mathbf{O}_1 = 0_{(N+L'-1\times N+2\nu-L_t-L-L_r-L'+4)}$, $\mathbf{T}_{dk}$ (for $k = 1, 2$) is of size $(N + L' - 1 \times N + L_t + L + L_r + L' - 4)$ with first column $[\mathbf{d}_{k(L_t+L+L_r-3)}, 0_{(1\times N+L'-1)}]^T$ and first row $[\mathbf{d}_{k(L_t+L+L_r-3)}, \ldots, \mathbf{d}_{k(0)}, 0_{(1\times N+L'-2)}]$. This leads to:

$$\begin{aligned}\mathbf{z}_t =&\mathbf{w}_1 \star \mathbf{z} + \mathbf{w}_2 \star \mathbf{z}^* \\ =&\underbrace{(\mathbf{w}_1 \star \mathbf{g}_{r1} + \mathbf{w}_2 \star \mathbf{g}_{r2}^*)}_{\mathbf{f}_1} \star (\mathbf{r}.e^{j2\pi\Delta f.\mathbf{t}}) \\ &+ \underbrace{(\mathbf{w}_1 \star \mathbf{g}_{r2} + \mathbf{w}_2 \star \mathbf{g}_{r1}^*) \star (\mathbf{r}^*.e^{-j2\pi\Delta f.\mathbf{t}})}_{\mathbf{f}_2}\end{aligned} \tag{9}$$

where $\mathbf{z}_t$ is of size $(N \times 1)$ and the design target for $\mathbf{w}_1$ and $\mathbf{w}_2$ is such that the $\mathbf{f}_2$ term vanishes, while $\mathbf{f}_1$ is (approximately) shorter

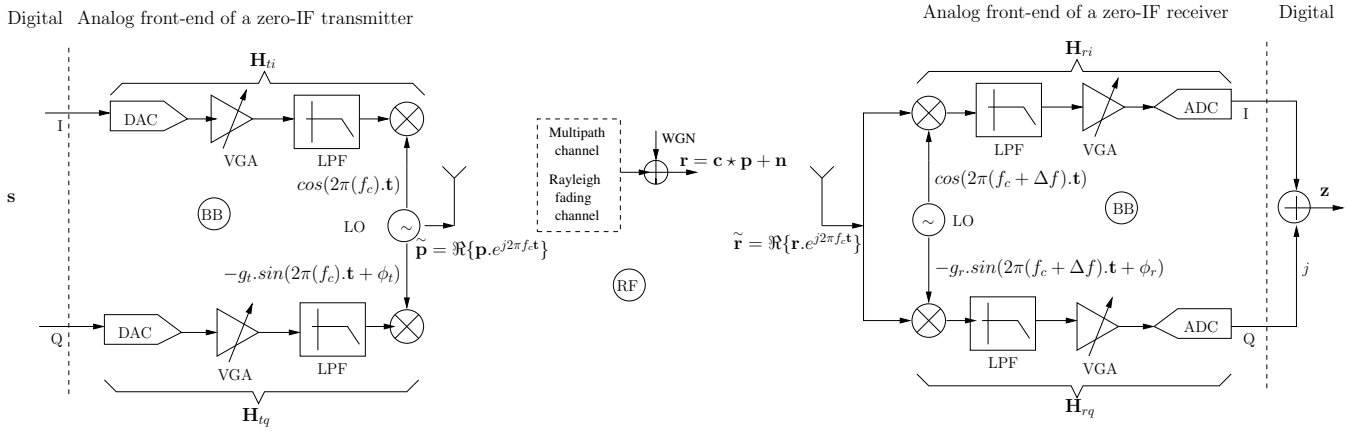

Fig. 1. Mathematical model of direct-conversion transmitter and receiver front-end with IQ imbalance, CFO and channel distortions

than the cyclic prefix. Now the resulting vector $\mathbf{z}_t$ is free of IBI and $\mathbf{f}_2$ interferences. At this point, we can multiply equation (9) with $e^{-j2\pi\Delta f.\mathbf{t}}$, based on any robust CFO estimation algorithm (for example [5] and [7]). We assume that the CFO Δf is accurately known. This leads to:

$$\widetilde{\mathbf{z}}_t = \mathbf{z}_t.e^{-j2\pi\Delta f.\mathbf{t}} = \widetilde{\mathbf{f}}_1 \star \mathbf{r} \tag{10}$$

where $\widetilde{\mathbf{f}}_1 = \mathbf{f}_1.(e^{-j2\pi\Delta f.(0\ldots(L_r-1))})^{-1}$. Thus, the resulting vector $\widetilde{\mathbf{z}}_t$ is now free from any time-dependent CFO and contains only frequency selective transmitter and receiver IQ imbalance along with channel and noise distortions. In conjunction with the TEQ scheme, a DFT is applied to the filtered sequence $\widetilde{\mathbf{z}}_t$. Finally a two tap frequency domain equalizer (FEQ) is applied at every sub-carrier and its conjugate mirror to compensate the IQ imbalance and the channel distortions. We define $\overset{\wedge}{\mathbf{S}}^{(i)}[l]$ as the estimate for lth sub-carrier of the ith OFDM symbol. This estimate is then obtained as:

$$\overset{\wedge}{\mathbf{S}}^{(i)}[l] = \mathbf{v}_1[l].(\mathbf{F}[l]\widetilde{\mathbf{z}}_t) + \mathbf{v}_2[l].(\mathbf{F}[l_m]\widetilde{\mathbf{z}}_t)^* \tag{11}$$

where $\mathbf{v}_1[l]$ and $\mathbf{v}_2[l]$ are the two taps of the FEQ for the lth sub-carrier, and $\mathbf{F}[l]$ is the lth row of the DFT matrix $\mathbf{F}$.

3.2. PTEQ based compensation

In order to simplify the entire scheme, we first swap the TEQ filtering operation with the multiplication of the negative CFO estimate. Now the swapped TEQ position can be transferred to the frequency domain resulting in two per-tone equalizers (PTEQs) each employing one DFT and $L'-1$ difference terms [12]. With this transformation the difficult channel shortening problem (design of $\mathbf{w}_1$ and $\mathbf{w}_2$) is avoided and replaced by a simple per-tone optimization problem. Equation (11) is then modified as follows:

$$\begin{aligned}\overset{\wedge}{\mathbf{S}}^{(i)}[l] = {} & \mathbf{v}_1^T[l]\mathbf{F}_i[l]\mathbf{z}_1 + \mathbf{v}_2^T[l](\mathbf{F}_i[l_m]\mathbf{z}_1)^* + \mathbf{v}_3^T[l]\mathbf{F}_i[l]\mathbf{z}_2 \\ & + \mathbf{v}_4^T[l](\mathbf{F}_i[l_m]\mathbf{z}_2)^*\end{aligned} \tag{12}$$

where $\mathbf{z}_1 = \mathbf{z}.e^{-j2\pi\Delta f.\mathbf{t}}$, $\mathbf{z}_2 = \mathbf{z}^*.e^{-j2\pi\Delta f.\mathbf{t}}$ and $\mathbf{v}_k[l]$ (for $k = 1\ldots4$) are PTEQs of size $(L' \times 1)$. $\mathbf{F}_i[l]$ is defined as:

$$\mathbf{F}_i[l] = \left[\begin{array}{c|c|c} \mathbf{I}_{L'-1} & 0_{L'-1\times N-L'+1} & -\mathbf{I}_{L'-1} \\ \hline 0_{1\times L'-1} & \mathbf{F}[l] & \end{array}\right]$$

where the first block row in $\mathbf{F}_i[l]$ is seen to extract the difference terms, while the last row corresponds to the single DFT. The PTEQ block scheme is shown in **Figure 2**. Based on equation (12), a maximum-likelihood (ML), least-square (LS) or minimum mean-square-error (MMSE) algorithm can be developed at the receiver side (see e.g. [10]).

We arrived at equation (12), assuming that we accurately know Δf. In practise, the CFO estimation algorithm may not be precise leading to some residual CFO $\psi = \Delta\widetilde{f}$ in the resultant vector $\widetilde{\mathbf{z}}_t$ of equation (10). This may lead to poor $\overset{\wedge}{\mathbf{S}}^{(i)}[l]$ symbol estimate due to residual ICI in the frequency domain. In order to further improve the performance of the equalizer, we keep the PTEQ length fixed and then search amongst various possible residual CFO values $\overset{\wedge}{\psi}$ such that the error in $\overset{\sim}{\mathbf{S}}^{(i)}[l]$ estimation becomes mimimum. This also leads to a much accurate estimation of CFO. The PTEQ coefficients for the lth sub-carrier can then be obtained based on the following MSE minimization:

$$\begin{pmatrix} min \\ \overset{\wedge}{\psi}, \mathbf{v}_1[l] \\ \mathbf{v}_2[l], \mathbf{v}_3[l] \\ \mathbf{v}_4[l] \end{pmatrix} \mathbb{E}\left\{\left|\mathbf{S}^{(i)}[l] - \begin{bmatrix}\mathbf{v}_1[l]\\ \mathbf{v}_2[l]\\ \mathbf{v}_3[l]\\ \mathbf{v}_4[l]\end{bmatrix}^T \begin{bmatrix} \mathbf{F}_i[l](\mathbf{z}_1.e^{-j2\pi\overset{\wedge}{\psi}.\mathbf{t}}) \\ (\mathbf{F}_i[l_m](\mathbf{z}_1.e^{-j2\pi\overset{\wedge}{\psi}.\mathbf{t}}))^* \\ \mathbf{F}_i[l](\mathbf{z}_2.e^{-j2\pi\overset{\wedge}{\psi}.\mathbf{t}}) \\ (\mathbf{F}_i[l_m](\mathbf{z}_2.e^{-j2\pi\overset{\wedge}{\psi}.\mathbf{t}}))^* \end{bmatrix}\right|^2\right\} \tag{13}$$

where $\mathbb{E}\{.\}$ is the expectation operator.

4. SIMULATION RESULTS

A typical OFDM system (similar to IEEE 802.11a) is simulated to evaluate the performance of the compensation scheme for frequency dependent and independent transmitter and receiver IQ imbalance under CFO. The performance comparison is made with an ideal system with no front-end distortion and with a system with no compensation algorithm included.

The parameters used in the simulation are as follows: OFDM symbol length $N = 64$, cyclic prefix length $\nu = 8$, constellation size=64QAM, filter impulse responses $\mathbf{h}_{ti} = \mathbf{h}_{ri} = [0.1,\ 0.9]$ and $\mathbf{h}_{tq} = \mathbf{h}_{rq} = [0.9,\ 0.1]$, frequency independent amplitude imbalance $g_t = g_r = 5\%$ and phase imbalance $\phi_t = \phi_r = 5^\circ$. It should

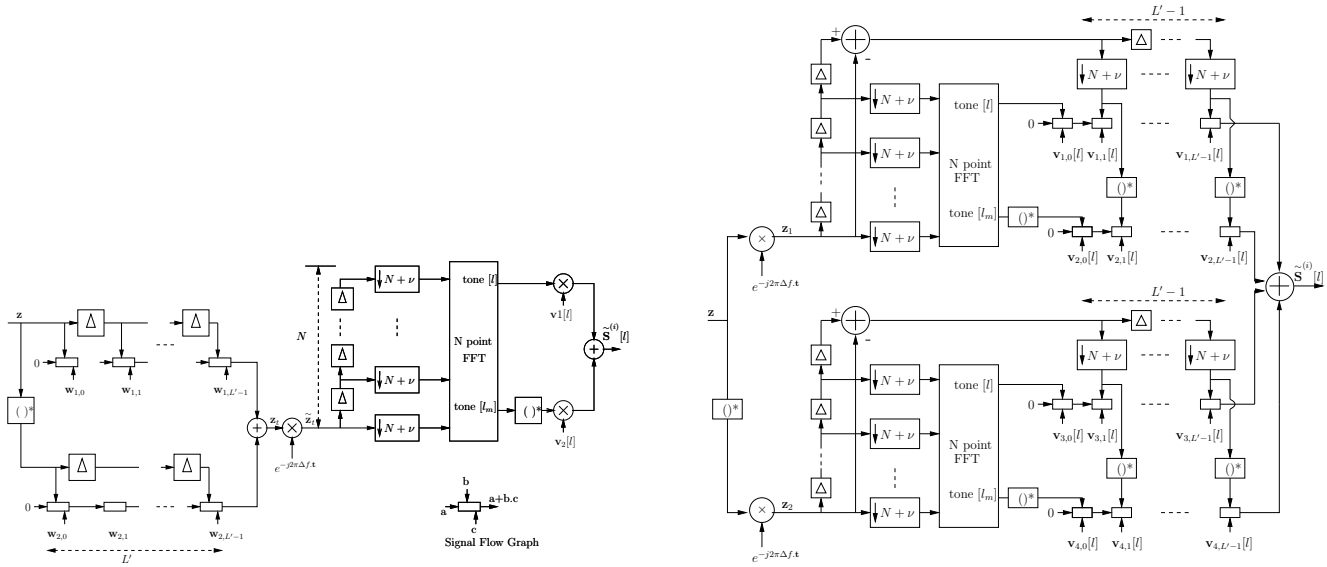

(a) L' tap TEQs with 2 tap FEQ per-tone

(b) L' tap PTEQs per-tone

Fig. 2. Compensation scheme for OFDM with frequency selective IQ imbalance and CFO

be noted that the imbalance level in this case may be higher than the level observed in a practical receiver. However we consider such an extreme case to evaluate the robustness/effectiveness of the proposed compensation scheme. We consider a CFO $\zeta = 0.32$ where ζ is the ratio of the actual CFO Δf to the subcarrier spacing $1/T.N$, where T is the sampling period. We have considered a training based RLS algorithm to initialize the PTEQ scheme [11] as this provides optimal convergence and achieves initialization with an acceptably small number of training symbols.

There are 3 different channel profiles: 1) an additive white Gaussian noise (AWGN) channel with a single tap unity gain, 2) a multipath channel with $L = 4$ taps. In both the cases 1 and 2, $(L_t + L + L_r - 2 < \nu)$ and a PTEQ with $L' = L_r$ taps is sufficient for compensation. In our case $L_r = 2$. 3) A multipath channel with $L = 10$ taps. In this case $(L_t + L + L_r - 2 > \nu)$, and a PTEQ with $L' = 10$ and $L' = 15$ taps is used for compensation. The taps of the multipath channel are chosen independently with complex Gaussian distribution.

In **Figure 3(a)**, we search for an optimal residual CFO value $\hat{\psi}$ for a given fixed length PTEQ structure $L' = 2$, SNR=30 dB and multipath channel length $L = 4$ taps. The figure shows BER vs residual CFO estimation error $e_r = \hat{\zeta}_r - \zeta_r$ where $\zeta_r = \psi.T.N$. It can be seen that for accurate residual CFO estimate ($\hat{\zeta}_r = \zeta_r$), the BER is lowest. The PTEQ coefficients obtained for this residual CFO estimate $\hat{\zeta}_r$ are then subsequently used for equalization.

Figure 3(b)-(d) show the BER vs SNR for the three different channel profiles. Every channel realization is independent of the previous one and the BER results depicted are obtained by averaging the BER curves over 10^4 independent channels. In the presence of frequency selective transmitter and receiver IQ imbalance and CFO with no compensation scheme in place, the OFDM system is completely unusable. Even for the case when there is only frequency independent IQ imbalance, the BER is very high. For the case $(\nu > L_t+L+L_r-2)$, close to ideal performance is obtained with the compensation scheme in place. For the case $(\nu < L_t+L+L_r-2)$, good performance is obtained when $L' = 15$ as compared to $L' = 10$ and $L' = 2$. Thus, a PTEQ with a sufficient number of taps is essential to shorten the combined channel, transmitter and receiver filter impulse response and also to compensate for the channel and front-end distortions. The compensation performance depends on how accurately the adaptive equalizer coefficients can converge to the ideal values.

5. CONCLUSION

In this paper the joint effect of transmitter and receiver frequency selective IQ imbalance, CFO and multipath channel distortions has been studied and an algorithm has been developed to compensate for such distortions in the digital domain. The PTEQ solution proposed is also applicable in those cases where the cyclic prefix is not sufficiently long to accommodate the channel, transmitter and receiver filter impulse responses. The algorithm provides a very efficient, post-FFT adaptive equalization with performance very close to the ideal case.

6. REFERENCES

[1] J.Bingham, "Multi-carrier modulation for data transmission: An idea whose time has come", *IEEE Communications Magazine*, pp. 5-14, May 1990.

[2] A.A. Abidi,"Direct-conversion radio transceivers for digital communications," *IEEE Journal on Solid-State Circuits*, vol. 30, pp. 1399-1410, Dec. 1995.

[3] T.Pollet, M. Van Bladel and M. Moeneclaey, "BER sensitivity of OFDM systems to carrier frequency offset and wiener phase noise", *IEEE Transactions on Communications*, vol. 43, no. (2/3/4), pp. 191-193, 1995.

[4] M.Valkama,M.Renfors and V.Koivunen, "Compensation of frequency-selective IQ imbalances in wideband receivers: mod-

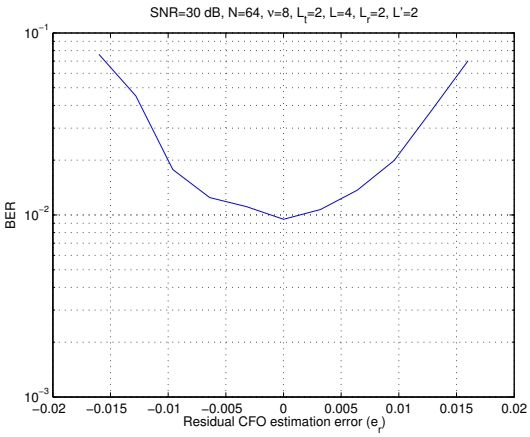

(a) BER vs Residual CFO error for 4-tap Rayleigh fading channel (fading)

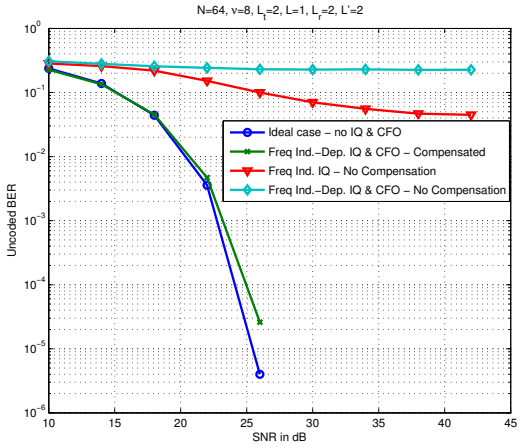

(b) BER vs SNR for AWGN flat channel (non-fading)

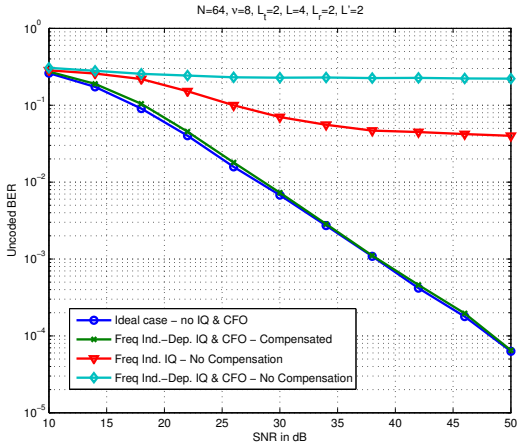

(c) BER vs SNR for 4-tap Rayleigh fading channel (fading)

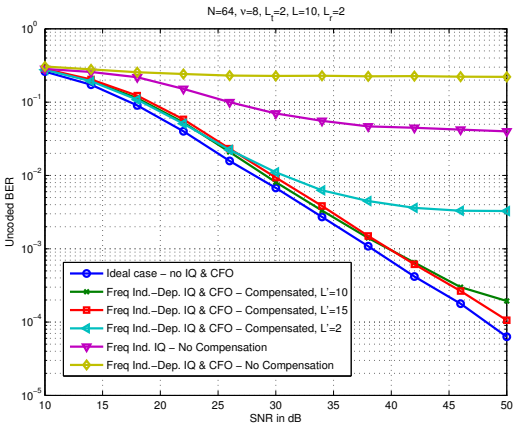

(d) BER vs SNR for 10-tap Rayleigh fading channel (fading)

Fig. 3. Simulation results for OFDM with 64QAM constellation.

els and algorithms," in *Proc. IEEE 3rd Workshop on Signal Processing Advances in Wireless Comm. (SPAWC)*, Taoyuan, Taiwan, Mar. 2001, pp. 42-45.

[5] J.Tubbax, B.Come, L.Van der Perre, M.Engels, M.Moonen and H.De Man, "Joint compensation of IQ imbalance and carrier frequency offset in OFDM systems," in *Proc. Radio and Wireless Conference*, Boston, MA, Aug. 2003, pp. 39-42.

[6] G.Xing, M. Shen and H. Liu, "Frequency offset and I/Q imbalance compensation for Direct-Conversion Receivers," *IEEE Transactions on Wireless Communications*, vol. 4, no. 2. pp. 673-680, March 2005.

[7] S.Fouladifard and H.Shafiee, "Frequency offset estimation in OFDM systems in presence of IQ imbalance," in *Proc. International Conference on Communications (ICC)*, Anchorage, AK, May 2003, pp. 2071-2075.

[8] A.Tarighat and A.H.Sayed, "OFDM systems with both transmitter & receiver IQ imbalances," in *Proc. IEEE 6th Workshop on Signal Processing Advances in Wireless Comm. (SPAWC)*, New York, NY, June 2005, pp. 735-739.

[9] J.Lin and E.Tsui, "Adaptive IQ imbalance correction for OFDM systems with frequency and timing offsets," in *IEEE Globecom*, Dallas, TX, Nov. 2004.

[10] D.Tandur and M.Moonen, "Joint compensation of OFDM transmitter and receiver IQ imbalance in the presence of carrier frequency offset," in *European Signal Processing Conference (EUSIPCO)*, Florence, Italy, Sep. 2006.

[11] D.Tandur and M.Moonen, "Joint compensation of OFDM frequency selective transmitter and receiver IQ imbalance", in *IEEE Proc. International Conference on Acoustics, Speech and Signal Processing (ICASSP)*, Honolulu, Hawaii, April 2007.

[12] K.van Acker, G.Leus and M.Moonen,"Per-tone equalization for DMT based systems," *IEEE Transactions on Communications*, vol. 49, no. 1, Jan. 2001.

[13] F.D.Neeser and J.L.Massey, "Proper complex random processes with applications to Information Theory", *IEEE Transactions on Information Theory*, vol. 39, no. 4, pp. 1293-1302, July 1993.