Efficient compensation of RF impairments for OFDM systems

Deepaknath Tandur and Marc Moonen
Department of Electrical Engineering
Katholieke Universiteit Leuven
Kasteelpark Arenberg 10, B-3001 Leuven, Belgium
Email: {deepaknath.tandur, marc.moonen}@esat.kuleuven.be

Chong-you Lee
Department of Electrical Engineering
National Chiao Tung University
Hsinchu, Taiwan
Email: leelityo@commlab.tw

***Abstract*—OFDM based systems are very sensitive to Radio frequency (RF) impairments such as in-phase/quadrature-phase (IQ) imbalance and carrier frequency offset (CFO). In this paper, a generally applicable joint transmitter (Tx) and receiver (Rx) RF impairment compensation scheme is proposed. It is composed of a time domain equalizer (TEQ) and two frequency domain equalizers (FEQ). The TEQ utilizes the short training symbols (STS) to estimate and compensate the frequency selective Rx IQ imbalance along with the CFO. The two FEQs then work on the specially induced phase rotated long training symbols (LTS) in order to compensate the remaining Tx or the combined Tx and Rx IQ imbalance along with the channel. A frequency-domain smoothing technique is also utilized in order to further speed up the convergence of the equalizers. The resulting cascade of equalizers provide an efficient compensation scheme in terms of both computational complexity as well as faster convergence.**

I. Introduction

With the ever increasing demand of wireless communication systems, the availability of cheaper and low power radios have become an important issue in today's wireless industry. In addition to their small size and low cost, the radios should also be flexible enough to support the growing number of wireless standards. The direct-conversion (or zero-IF) based architecture provides an attractive alternative as it can convert the radio frequency (RF) signal directly to baseband (BB) or vice-versa without any intermediate frequencies (IF) [1]. However, the direct-conversion based systems are very sensitive to component imperfections which is sometimes unavoidable due to manufacturing defects, etc. These analog imperfections generally lead to RF impairments such as in-phase/quadrature-phase (IQ) imbalance and carrier frequency offset (CFO). The result could be a degradation in performance especially when multi-carrier based systems such as orthogonal frequency division multiplexing (OFDM) systems are considered [2]-[4].

Recently several articles [5]-[14] have been published to study the effects of these impairments and develop their compensation scheme digitally. The performance degradation due to receiver (Rx) IQ imbalance and CFO in OFDM systems has been well investigated in [5] and [6]. In [7], a specially induced phase rotated short training symbols have been proposed to estimate the Rx IQ imbalance along with the channel. However this scheme is not valid in the presence of transmitter (Tx) IQ imbalance in the system. In [11]-[12], efficient compensation schemes for frequency selective Rx IQ Imbalance have been developed. The joint compensation of CFO along with frequency independent Rx IQ imbalance has been proposed in [13] whereas in [9] and [10] the authors consider both Tx and Rx IQ imbalance with residual or no CFO in the system. In [14], we proposed a generally applicable adaptive frequency domain equalizer for joint compensation of frequency selective Tx and Rx IQ imbalance along with CFO over insufficient cyclic prefix (CP) length. This equalizer is based on the per-tone equalization scheme (PTEQ) [15]. The drawback of a general purpose PTEQ scheme is that they tend to be heavy and may require a long training sequence for their initialization.

This paper is an extension of [14] as it targets to provide a generally applicable (Tx-Rx IQ imbalance and CFO) equalization scheme with less training and computational requirements. The proposed scheme utilizes both the short training symbols (STS) as well as the long training symbols (LTS) in the system to estimate and compensate RF impairments along with the multipath channel. The entire equalization scheme involves one time domain equalizer (TEQ) and two frequency domain equalizers (FEQ). The advantage of such a scheme is that the individual equalizers are generally small in size and easy to implement. Also the equalizers can be separately optimized to improve the overall performance.

The paper is organized as follows: The system model is presented in section II. Section III explains the RF impairment compensation scheme. Computer simulations are shown in Section IV and finally section V concludes the paper.

Notation: Vectors are indicated in bold and scalar parameters in normal font. Superscripts $\{\}^*, \{\}^T, \{\}^H$ represent conjugate, transpose and Hermitian respectively. $\mathbf{F}$ and $\mathbf{F}^{-1}$ represent the $N \times N$ discrete Fourier transform and its inverse. $\mathbf{I}_N$ is the $N \times N$ identity matrix and $0_{M\times N}$ is the $M \times N$ all zero matrix. Operators $*$, $\circledast$ and . denote linear convolution, circular convolution and component-wise vector multiplication.

II. System Model

We consider an OFDM transmission over frequency selective fading channels. We assume a single-input single-output (SISO) system, but the results can be easily extended to

multiple-input multiple-output (MIMO) systems. Let $\mathbf{S}$ be an uncoded frequency domain OFDM symbol of size $(N \times 1)$. This symbol is transformed to the time domain by an inverse discrete Fourier transform (IDFT) operation. A cyclic prefix (CPr) of length ν_{pr} is then added to the head of each symbol. The resulting time domain baseband signal $\mathbf{s}$ is given as:

$$\mathbf{s} = \mathbf{P}\mathbf{F}^{-1}\mathbf{S} \tag{1}$$

where $\mathbf{P}$ is the cyclic insertion matrix given by:

$$\mathbf{P} = \left[\begin{array}{c|c} 0_{(\nu_{pr} \times N - \nu_{pr})} & \mathbf{I}_{\nu_{pr}} \\ \hline & \mathbf{I}_N \end{array}\right]$$

We represent frequency selective (FS) IQ imbalance resulting from Tx front-end components by two mismatched filters with frequency responses given as $\mathbf{H}_{ti} = \mathbf{F}\{\mathbf{h}_{ti}\}$ and $\mathbf{H}_{tq} = \mathbf{F}\{\mathbf{h}_{tq}\}$. The frequency independent (FI) IQ imbalance is represented by amplitude and phase mismatch g_t and ϕ_t between the two front-end branches. Following [11], the baseband signal $\mathbf{p}$ after front-end distortions can be given as:

$$\mathbf{p} = \mathbf{g}_{t1} * \mathbf{s} + \mathbf{g}_{t2} * \mathbf{s}^* \tag{2}$$

where

$$\mathbf{g}_{t1} = \mathbf{F}^{-1}\{\mathbf{G}_{t1}\} = \mathbf{F}^{-1}\left\{\frac{[\mathbf{H}_{ti} + g_t e^{-\jmath\phi_t}\mathbf{H}_{tq}]}{2}\right\}$$

$$\mathbf{g}_{t2} = \mathbf{F}^{-1}\{\mathbf{G}_{t2}\} = \mathbf{F}^{-1}\left\{\frac{[\mathbf{H}_{ti} - g_t e^{\jmath\phi_t}\mathbf{H}_{tq}]}{2}\right\}$$

Here $\mathbf{g}_{t1}$ and $\mathbf{g}_{t2}$ are mostly truncated to length L_t and then padded with $N - L_t$ zero elements. They represent the combined frequency independent and dependent Tx IQ imbalance.

Finally, an expression similar to equation (2) can be used to model IQ imbalance at the receiver. Let $\mathbf{z}$ represent the down-converted baseband complex signal after being distorted by combined frequency dependent and independent Rx IQ imbalance $\mathbf{g}_{r1}$ and $\mathbf{g}_{r2}$ of length L_r. Then $\mathbf{z}$ will be given as:

$$\mathbf{z} = \mathbf{g}_{r1} * \mathbf{r} + \mathbf{g}_{r2} * \mathbf{r}^* \tag{3}$$

where

$$\mathbf{r} = \mathbf{c} * \mathbf{p} + \mathbf{n}$$

Here $\mathbf{c}$ is the baseband representation of the multipath channel of length L and $\mathbf{n}$ is the additive white Gaussian noise (AWGN). Equation (2) can be substituted in equation (3) leading to

$$\begin{aligned}\mathbf{z} =& (\mathbf{g}_{r1} * \mathbf{c} * \mathbf{g}_{t1} + \mathbf{g}_{r2} * \mathbf{c}^* * \mathbf{g}^*_{t2}) * \mathbf{s} + \mathbf{g}_{r1} * \mathbf{n} + \\ & (\mathbf{g}_{r1} * \mathbf{c} * \mathbf{g}_{t2} + \mathbf{g}_{r2} * \mathbf{c} * * \mathbf{g}^*_{t1}) * \mathbf{s}^* + \mathbf{g}_{r2} * \mathbf{n}^* \\ =& \mathbf{d}_1 * \mathbf{s} + \mathbf{d}_2 * \mathbf{s}^* + \mathbf{g}_{r1} * \mathbf{n} + \mathbf{g}_{r2} * \mathbf{n}^*\end{aligned} \tag{4}$$

where $\mathbf{d}_1$ and $\mathbf{d}_2$ are the combined Tx IQ, channel and Rx IQ impulse responses of length $L_t + L + L_r - 2$. In this paper we consider the CPr ν_{pr} to be long enough to accommodate $\mathbf{d}_1$ and $\mathbf{d}_2$. Thus in frequency domain, equation (4) can be given as:

$$\begin{aligned}\mathbf{Z} =& (\mathbf{G}_{r1}.\mathbf{G}_{t1}.\mathbf{C} + \mathbf{G}_{r2}.\mathbf{G}^*_{t2m}.\mathbf{C}^*_m).\mathbf{S}^{(i)} + \mathbf{G}_{r1}.\widetilde{\mathbf{n}} \\ & + (\mathbf{G}_{r1}.\mathbf{G}_{t2}.\mathbf{C} + \mathbf{G}_{r2}.\mathbf{G}^*_{t1m}.\mathbf{C}^*_m).\mathbf{S}^{*(i)}_m + \mathbf{G}_{r2}.\widetilde{\mathbf{n}}^*_m\end{aligned} \tag{5}$$

where $\mathbf{Z}, \mathbf{G}_{r1}, \mathbf{G}_{r2}, \mathbf{C}$ and $\widetilde{\mathbf{n}}$ are frequency domain representations of $\mathbf{z}, \mathbf{g}_{r1}, \mathbf{g}_{r2}, \mathbf{c}$ and $\mathbf{n}$. Equation (5) shows that due to the IQ imbalance, power leaks from the signal on the mirror carrier ($\mathbf{S}^*_m$) to the carrier under consideration ($\mathbf{S}$) and thus causes inter-carrier-interference (ICI). Here $()_m$ denotes the mirroring operation in which the vector indices are reversed, such that $\mathbf{S}_m[l] = \mathbf{S}[l_m]$ where $l_m = 2 + N - l$ for $l = 2 \ldots N$ and $l_m = l$ for $l = 1$.

In the presence of carrier frequency offset Δf in the OFDM system, the resulting baseband signal can be written as [14]:

$$\mathbf{z} = \mathbf{g}_{r1} * (\mathbf{r}.e^{\jmath 2\pi\Delta f.\mathbf{t}}) + \mathbf{g}_{r2} * (\mathbf{r}^*.e^{-\jmath 2\pi\Delta f.\mathbf{t}}) \tag{6}$$

where $e^{\jmath\mathbf{x}}$ is the element-wise exponential function on the vector $\mathbf{x}$ and $\mathbf{t}$ is the time vector. The joint effect of both Tx and Rx IQ imbalance along with CFO results in a severe performance degradation, as will be shown in section 4.

III. RF IMPAIRMENTS COMPENSATION SCHEME

A. Joint Tx-Rx IQ imbalance and CFO

In the generalized case of CFO impairment along with both the Tx and Rx IQ imbalance, we first design a time domain equalizer (TEQ) to compensate the Rx IQ imbalance in the presence of CFO. The TEQ utilizes the identical short training symbols (STS) available in the OFDM system to estimate and compensate the IQ impairments.

Let there be M_s identical STS symbols each of size $N_t \times 1$ in the OFDM system. Then $\mathbf{z}^{(i)}_s$ represents the equivalent baseband STS signal as defined in equation (6). The superscript $i = 1 \ldots . M_s$ denotes the symbol number in the STS packet. In order to estimate the CFO, any robust CFO estimation algorithm based on STS can be used. In this work we estimate the CFO based on the average phase rotation between each available pair of training symbol in the STS packet. The raw CFO estimate $\hat{\Delta f}$ is then given by:

$$\hat{\Delta f} = \Xi\left(\frac{arg\{\mathbf{z}^{(i)T}_s \mathbf{z}^{(j)*}_s\}}{2\pi(j-i)N_t T_s}\right) \tag{7}$$

where $i = 1 \ldots M_s - 1$ and $j = i + 1 \ldots M_s$. T_s is the sample period and Ξ is the expectation operator. At this point we assume that the estimated CFO $\hat{\Delta f}$ is sufficiently accurate. We now design a TEQ $\mathbf{w}$ of length L'_1 taps and apply it to the complex conjugate of the received signal $\mathbf{z}^*_s$. The output of the TEQ is then added to the received signal $\mathbf{z}_s$, leading to:

$$\begin{aligned}\mathbf{z}_t =& \mathbf{z}_s + \mathbf{z}^*_s \star \mathbf{w} \\ =& \underbrace{(\mathbf{g}_{r1} + \mathbf{g}^*_{r2}\mathbf{w})}_{\mathbf{f}_1} \star (\mathbf{r}.e^{\jmath 2\pi\Delta f.\mathbf{t}}) + \underbrace{(\mathbf{g}_{r2} + \mathbf{g}^*_{r1}\mathbf{w})}_{\mathbf{f}_2} \star (\mathbf{r}^*.e^{-\jmath 2\pi\Delta f.\mathbf{t}})\end{aligned} \tag{8}$$

In equation (8), the term $\mathbf{f}_2$ vanishes if the filter $\mathbf{w} = -\mathbf{F}^{-1}\{\frac{\mathbf{G}_{r2}[l]}{\mathbf{G}^*_{r1}[l_m]}\}$ where l=1 ...N denotes the subcarrier index of the OFDM frequency domain symbol. Thus $\mathbf{w}$ measures the amount of IQ mismatch between the I and Q branch. In practical systems depending on the IQ mismatch, the solution of $\mathbf{w}$ may have an energy distribution both at the top and

bottom end of the OFDM time domain symbol. Thus $\mathbf{w}$ can be represented by:

$$\mathbf{w} = [\underbrace{w_0 w_1 \dots w_a}_{\mathbf{w}_a^T} \quad 0_{N-a-b\times 1} \quad \underbrace{w_{-b} \dots w_{-1}}_{\mathbf{w}_b^T}]^T$$

where the length of $\mathbf{w}_a$ and $\mathbf{w}_b$ are L_a and L_b respectively. The total length being $L_a + L_b = L_1'$. $\mathbf{w}_a$ and $\mathbf{w}_b$ are the non zero elements at the top and bottom end of the symbol. Here the length L_b determines the cyclic postfix (CPo) length ν_{po} needed to effectively compensate the Rx IQ imbalance. Both L_a and L_b can be considered short in length, this is because in practical systems the frequency selective IQ imbalances are relatively smooth [11]. Based on this, we assume that a small portion of CPr can be dedicated to CPo thus leading to no additional overhead of the system. In the presence of CPo, the cyclic matrix in equation (1) is modified as:

$$\mathbf{P} = \begin{bmatrix} 0_{(\nu_{pr}\times N-\nu_{pr})} & \mathbf{I}_{\nu_{pr}} \\ \mathbf{I}_N & \\ \mathbf{I}_{\nu_{po}} & 0_{(\nu_{po}\times N-\nu_{po})} \end{bmatrix}$$

Also the linear convolution operation in equation (8) is now replaced by the circular convolution one. This is required to preserve the property of dot multiplication in the frequency domain. Equation (8) can be written in matrix form as:

$$\mathbf{z}_t^{(i)} = \mathbf{z}_s^{(i)} + \mathbf{z}_s^{(i)*}\mathbf{w}_1' \tag{9}$$

where

$$\mathbf{z}_t^{(i)} = [z_{t1}^{(i)} z_{t2}^{(i)} \dots z_{tN_t}^{(i)}]^T \quad \mathbf{z}_s^{(i)} = [z_{s1}^{(i)} z_{s2}^{(i)} \dots z_{sN_t}^{(i)}]^T$$

$$\mathbf{z}_s^{(i)*} = \begin{bmatrix} z_{s1+L_b}^{(i)*} \dots z_{s1}^{(i)*} & z_{sN_t}^{(i-1)*} \dots z_{sN_t-L_a+2}^{(i-1)*} \\ z_{s1+L_b-1}^{(i)*} \dots z_{s2}^{(i)*} & z_{s1}^{(i)*} \dots z_{sN_t-L_a+3}^{(i-1)*} \\ \vdots & \vdots \\ z_{sNt+L_b}^{(i+1)*} \dots z_{sNt}^{(i)*} & z_{sNt-1}^{(i)*} \dots z_{sN_t-L_a+1}^{(i)*} \end{bmatrix}$$

$$\mathbf{w}_1' = [w_{-b} \dots w_{-1} \quad w_0 \quad w_1 \dots w_a]^T$$

where $\mathbf{z}_{sb}^{(i)}$ and $\mathbf{z}_{tb}^{(i)}$ stands for $b = 1 \dots N_t$ sample of the $i = 1 \dots M_s$ received training symbol.

At this point every pair of STS symbol after Rx IQ imbalance compensation can be written as:

$$\begin{aligned} \mathbf{z}_t^{(j)} &= e^{\jmath\Omega_s}\mathbf{z}_t^{(i)} \\ \underbrace{\mathbf{z}_s^{(j)} - e^{\jmath\Omega_s}\mathbf{z}_s^{(i)}}_{\mathbf{A}} &= \underbrace{(e^{\jmath\Omega_s}\mathbf{z}_s^{(i)*} - \mathbf{z}_s^{(j)*})}_{\mathbf{B}}\mathbf{w}_1' \end{aligned} \tag{10}$$

where $\Omega_s = 2\pi(j-i)\Delta f N_t T_s$, $i = 1 \dots M_s - 1$ and $j = i+1 \dots M_s$. It is to be noted that for the first and last training symbols $\mathbf{z}_s^{(1)}$ and $\mathbf{z}_s^{(M_s)}$, only the samples where ν_{pr} and ν_{po} can hold true are considered in equation (10). Finally the filter coefficients can be obtained based on the following MSE minimization:

$$\underset{\mathbf{w}'}{min} \; \Xi\left\{|\mathbf{A} - \mathbf{B}\mathbf{w}_1'|^2\right\} \tag{11}$$

Based on equation (11), a maximum-likelihood (ML), least-square (LS) or minimum mean-square-error (MMSE) algorithm can be developed.

Once the filter coefficients $\mathbf{w}_1'$ are obtained, the CFO is re-estimated by substituting the filtered signal $\mathbf{z}_t$ in place of $\mathbf{z}_s$ in equation (7). Thus the entire process from equation (7)-(11) can be repeated number of times till a much accurate estimate of $\overset{\wedge}{\Delta f}$ and $\mathbf{w}_1'$ are obtained. In section IV it is shown that this iterative process may be needed 4-5 times, depending on the SNR value. Once the fine CFO is known, we can de-rotate $\mathbf{z}_t$ with $e^{-j2\pi\hat{f}.\mathbf{t}}$. This leads to:

$$\widetilde{\mathbf{z}}_t = \mathbf{z}_t.e^{-j2\pi\Delta f.\mathbf{t}} = \widetilde{\mathbf{f}}_1 \star \mathbf{r} \tag{12}$$

where $\widetilde{\mathbf{f}}_1 = \mathbf{f}_1.(e^{-j2\pi\Delta f.(0\dots(L_r-1))})^{-1}$. The resulting vector $\widetilde{\mathbf{z}}_t$ now contains only Tx IQ imbalance along with channel and noise distortions. Similarly, the data and LTS symbols are filtered first by the TEQ $\mathbf{w}_1'$ and then de-rotated. A DFT is then applied to the received sequence. In frequency domain, the received data signal $\widetilde{\mathbf{Z}}_t$ and the complex conjugate of its mirror $\widetilde{\mathbf{Z}}_{tm}^*$ can be written as:

$$\begin{aligned} \widetilde{\mathbf{Z}}_t &= \mathbf{C}.\mathbf{G}_{t1}.\mathbf{S} + \mathbf{C}.\mathbf{G}_{t2}.\mathbf{S}_m^* + \widetilde{\mathbf{n}} \\ \widetilde{\mathbf{Z}}_{tm}^* &= \mathbf{C}_m^*.\mathbf{G}_{t1m}^*.\mathbf{S} + \mathbf{C}_m^*.\mathbf{G}_{t2m}^*.\mathbf{S}_m^* + \widetilde{\mathbf{n}}_m^* \end{aligned} \tag{13}$$

Here the scaling term $\mathbf{F}\{\widetilde{\mathbf{f}}_1\}$ has been ignored for simplicity. We now design a one tap frequency domain equalizer (FEQ) $\mathbf{V}_a[l]$ for $l = 1 \dots N$ and apply it to the mirror complex conjugate of the received signal $\widetilde{\mathbf{Z}}_t^*[l_m]$. The output of the FEQ is then added with the received signal $\widetilde{\mathbf{Z}}_t$ in order to compensate the Tx IQ imbalance. This leads to:

$$\begin{aligned} \overset{\wedge}{\mathbf{Z}}_s &= \widetilde{\mathbf{Z}}_t + \mathbf{V}_a.\widetilde{\mathbf{Z}}_{tm}^* \\ &= \underbrace{(\mathbf{C}.\mathbf{G}_{t1} + \mathbf{V}_a.\mathbf{C}_m^*.\mathbf{G}_{t1m}^*)}_{\mathbf{f}_3}.\mathbf{S} + \widetilde{\mathbf{n}} \\ &+ \underbrace{(\mathbf{C}.\mathbf{G}_{t2} + \mathbf{V}_a.\mathbf{C}_m^*.\mathbf{G}_{t2m}^*)}_{\mathbf{f}_4}.\mathbf{S}_m^* + \mathbf{V}_a.\widetilde{\mathbf{n}}_m^* \end{aligned} \tag{14}$$

Here the term $\mathbf{f}_4$ vanishes, if the filter coefficients $\mathbf{V}_a[l]$ can be given as:

$$\mathbf{V}_a[l] = -\frac{\mathbf{C}[l].\mathbf{G}_{t2}[l]}{(\mathbf{C}^*[l_m].\mathbf{G}_{t2}^*[l_m])}$$

In order to design such an equalizer, we consider $i = 1 \dots M_l$ number of phase rotated long training symbols (LTS). All the training symbols are identical but with different phase rotations $e^{\jmath\Phi_l}$. The phase rotation term Φ_l is user defined and can be between $0 \dots 2\pi$ radians. Now equation (13) can be modified for the ith LTS symbol as follows:

$$\begin{aligned} \widetilde{\mathbf{Z}}_t^{(i)} &= \mathbf{C}.\mathbf{G}_{t1}.\mathbf{S}^{(i)}e^{\jmath\Phi_l^{(i)}} + \mathbf{C}.\mathbf{G}_{t2}.\mathbf{S}_m^{*(i)}e^{-\jmath\Phi_l^{(i)}} + \widetilde{\mathbf{n}} \\ \widetilde{\mathbf{Z}}_{tm}^{(i)*} &= \mathbf{C}_m^*.\mathbf{G}_{t1m}^*.\mathbf{S}^{(i)}e^{\jmath\Phi_l^{(i)}} + \mathbf{C}_m^*.\mathbf{G}_{t2m}^*.\mathbf{S}_m^{(i)*}e^{-\jmath\Phi_l^{(i)}} + \widetilde{\mathbf{n}}_m^* \end{aligned} \tag{15}$$

Similar to equation (10), we can now relate every sub-carrier pair of LTS symbol after Tx IQ imbalance compensation as:

$$\begin{aligned} \overset{\wedge}{\mathbf{Z}}_s^{(j)}[l] &= e^{\jmath\Omega_l}\overset{\wedge}{\mathbf{Z}}_s^{(i)}[l] \\ \underbrace{\overset{\sim}{\mathbf{Z}}_t^{(j)}[l] - e^{\jmath\Omega_l}\overset{\sim}{\mathbf{Z}}_t^{(i)}[l]}_{\mathbf{E}} &= \underbrace{(e^{\jmath\Omega_l}\overset{\sim}{\mathbf{Z}}_t^{(i)*}[l_m] - \overset{\sim}{\mathbf{Z}}_t^{(j)*}[l_m])}_{\mathbf{F}}\mathbf{V}_a[l] \end{aligned} \tag{16}$$

where $\Omega_l = \Phi_l^{(j)} - \Phi_l^{(i)}$, $i = 1 \ldots M_l - 1$ and $j = i + 1 \ldots M_l$. The total number of valid pairs that can be considered in equation (16) is given by $N_p = C_2^{M_l} - N_\Omega$ where $C_a^b = \frac{b!}{a!(b-a)!}$ and N_Ω is the total number of pairs with $\Omega_{l=0,\pi,2\pi}$.

Finally, the filter coefficients can be obtained based on the following MSE minimization:

$$\underset{\mathbf{V}_a[l]}{min}\ \Xi\left\{|\mathbf{E} - \mathbf{F}\mathbf{V}_a[l]|^2\right\} \tag{17}$$

Once the mirror interference due to Tx IQ imbalance has been estimated and compensated by the FEQ, the filtered signal $\overset{\wedge}{\mathbf{Z}}_s[l]$ is then applied to a second one tap FEQ $\mathbf{V}_b[l]$. A standard FEQ employed in a typical OFDM system [2] can be used in this case. The second FEQ estimates and compensates the remaining frequency selective distortions resulting in the OFDM symbol estimate $\overset{\wedge}{\mathbf{S}}[l]$. Thus the FEQ coefficients estimate the term $\mathbf{f}_3$ corrupted by noise. In the noiseless case, the filter coefficients are given as:

$$\mathbf{V}_b[l] = \mathbf{f}_3[l] = \mathbf{C}[l].\left(\mathbf{G}_{t1}[l] - \frac{\mathbf{G}_{t2}[l].\mathbf{G}_{t1}^*[l_m]}{\mathbf{G}_{t2}^*[l_m]}\right)$$

As $\mathbf{f}_3$ is a dot multiplication of only the channel and Tx IQ imbalance terms, its impulse response $\mathbf{w}_2'$ can be considered of fixed length L_2' with non zero elements both at the top $\mathbf{w}_c$ and the bottom $\mathbf{w}_d$ of the time domain symbol. The time domain symbol structure will be similar to $\mathbf{w}_1'$ in equation (9). Thus the estimate of $\mathbf{V}_b[l]$ can be further improved by first applying the FEQ output to an IDFT and then forcing the $N - L_2'$ terms to zero and then again applying a DFT resulting in an overall frequency smoothing operation [12].

The frequency smoothing operation is not performed on the first FEQ coefficients $\mathbf{V}_a[l]$ as its estimate consists of the channel term both at the numerator and the denominator. This leads to a different impulse response length of $\mathbf{V}_a[l]$ coefficients for any variation in the characteristics of a multipath channel. Thus the frequency smoothing operation is performed only on the second FEQ. The smoothing operation helps in accelerating the convergence of the equalizer coefficients resulting in an overall improved performance as will be shown in section IV.

The proposed equalization scheme when applied to the data symbol is shown in **Figure 1**. As the TEQ operates at a higher sampling rate compared to the two FEQs, if desired, the TEQ can be transformed to the frequency domain and then combined with the remaining two FEQs. This will result in an equalization structure similar to the joint compensation scheme as proposed in [14].

B. Joint Tx-Rx IQ imbalance

In the absence of CFO, the equation (10) is no longer applicable. In this case we perform the entire compensation in the post-FFT scenario i.e., both the FEQs are utilized to compensate the joint Tx-Rx IQ imbalance along with the channel distortions. Also in the case of very small residual CFO in the system, the CFO estimation and the TEQ compensation scheme may not be very effective, in this case the presence of CFO is ignored and the above FEQ only equalization process is applied. Thus a DFT is directly applicable on the received signal $\mathbf{z}$ as shown in equation (4). The first FEQ takes the mirror conjugate values from the DFT and its output values are then directly added to the DFT output. This results in a modified form of equation (14), given as:

$$\begin{aligned} \overset{\wedge}{\mathbf{Z}}_s &= \mathbf{Z} + \mathbf{V}_a.\mathbf{Z}_m^* \\ &= \underbrace{(\mathbf{D}_1 + \mathbf{V}_a.\mathbf{D}_{2m}^*)}_{\mathbf{f}_3}.\mathbf{S} + \underbrace{(\mathbf{D}_2 + \mathbf{V}_a.\mathbf{D}_{1m}^*)}_{\mathbf{f}_4}.\mathbf{S}_m^* + \overset{\sim}{\mathbf{n}}_t + \mathbf{V}_a.\overset{\sim}{\mathbf{n}}_{tm}^* \end{aligned} \tag{18}$$

where $\mathbf{D}_1 = (\mathbf{G}_{r1}.\mathbf{G}_{t1}.\mathbf{C} + \mathbf{G}_{r2}.\mathbf{G}_{t2m}^*.\mathbf{C}_m^*)$, $\mathbf{D}_2 = (\mathbf{G}_{r1}.\mathbf{G}_{t2}.\mathbf{C} + \mathbf{G}_{r2}.\mathbf{G}_{t1m}^*.\mathbf{C}_m^*)$ and $\overset{\sim}{\mathbf{n}}_t = \mathbf{G}_{r1}.\overset{\sim}{\mathbf{n}} + \mathbf{G}_{r2}.\overset{\sim}{\mathbf{n}}_m^*$. In order to mitigate $\mathbf{f}_4$, the first FEQ coefficients $\mathbf{V}_a[l]$ are given as:

$$\mathbf{V}_a[l] = -\frac{(\mathbf{G}_{r1}[l].\mathbf{G}_{t2}[l].\mathbf{C}[l] + \mathbf{G}_{r2}[l].\mathbf{G}_{t1}^*[l_m].\mathbf{C}^*[l_m])}{(\mathbf{G}_{r1}^*[l_m].\mathbf{G}_{t1}^*[l_m].\mathbf{C}^*[l_m] + \mathbf{G}_{r2}^*[l_m].\mathbf{G}_{t2}[l].\mathbf{C}[l])}$$

and in the noiseless case, the second FEQ coefficients $\mathbf{V}_b[l] = (\mathbf{D}_1[l] + \mathbf{V}_a[l].\mathbf{D}_2^*[l_m])$. As both the FEQ estimates have the channel term in the numerator as well as the denominator, the frequency smoothing operation is not considered in this case. The performance of the compensation scheme for a given number of training symbols M_l will be similar to the compensation scheme in [9] and the joint compensation scheme without CFO in [14].

C. Rx IQ imbalance

In the case of only Rx IQ imbalance in the system, we again perform the entire compensation in the post-FFT scenario using the two FEQs. Now the equation (18) is given as follows:

$$\begin{aligned} \overset{\wedge}{\mathbf{Z}}_s &= \mathbf{Z} + \mathbf{V}_a.\mathbf{Z}_m^* \\ &= \underbrace{\mathbf{C}(\mathbf{G}_{r1} + \mathbf{V}_a.\mathbf{G}_{r2m}^*)}_{\mathbf{f}_3}.\mathbf{S} + \underbrace{\mathbf{C}_m^*(\mathbf{G}_{r2} + \mathbf{V}_a.\mathbf{G}_{r1m}^*)}_{\mathbf{f}_4}.\mathbf{S}_m^* \\ &\quad + \overset{\sim}{\mathbf{n}}_t + \mathbf{V}_a.\overset{\sim}{\mathbf{n}}_{tm}^* \end{aligned} \tag{19}$$

The solution for $\mathbf{V}_a[l]$ is given as

$$\mathbf{V}_a[l] = -\frac{\mathbf{G}_{r2}[l]}{\mathbf{G}_{r1}^*[l_m]}$$

and $\mathbf{V}_b[l]$ in the noiseless case as:

$$\mathbf{V}_b[l] = -\mathbf{C}[l].\left(\mathbf{G}_{r1}[l] - \frac{\mathbf{G}_{r2}[l].\mathbf{G}_{r2}^*[l_m]}{\mathbf{G}_{r1}^*[l_m]}\right)$$

Notice that $\mathbf{V}_a[l]$ is free from any channel term and it contains only the Rx IQ imbalance terms. Thus once the first FEQ

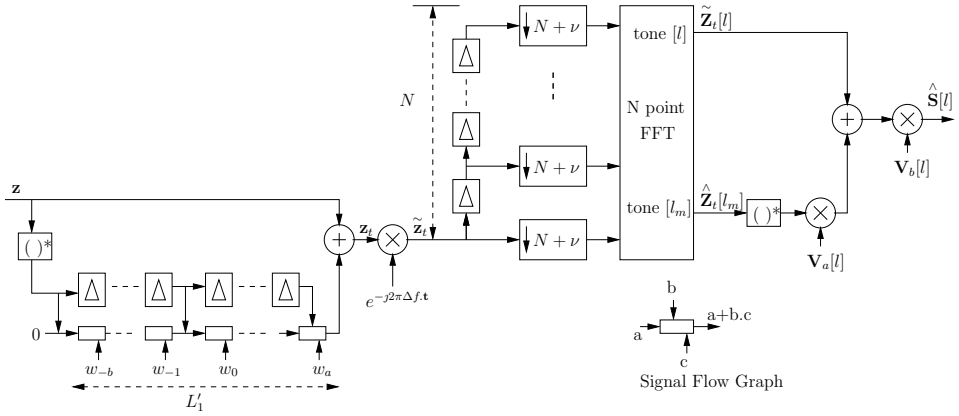

Fig. 1. Compensation scheme for OFDM with frequency selective Tx-Rx IQ imbalance and CFO

$\mathbf{V}_a[l]$ estimates are known, they need not be re-estimated with every change in the channel characteristics. The IQ imbalance parameters remain relatively static and they can be estimated much less frequently. Thus in the Rx IQ imbalance only scenario, both the IQ imbalance and the channel estimate can be decoupled by the two FEQs. Also in this case, the frequency smoothing operation can be performed on both the FEQs resulting in a much improved performance with even as low as only $M_l = 2$ training symbols.

IV. Simulation Results

An OFDM system (similar to IEEE 802.11a) is simulated to evaluate the performance of the compensation scheme.The parameters used in the simulation are as follows: OFDM symbol length $N = 64$, cyclic prefix length $\nu_{pr} = 12$, cyclic postfix length $\nu_{po} = 4$ and constellation size=64QAM. We consider $M_s = 10$ identical STS symbols of length $N_t = 16$ and $M_l = 4$ identical BPSK LTS symbols of length $N = 64$. The phase rotation of the LTS symbols are given as $\phi_l = 0, \pi/4, \pi/2$ and $3\pi/2$. The filter impulse responses are $\mathbf{h}_{ri} = [0.25,\ 0.9\ 0.1]$, $\mathbf{h}_{rq} = [0.1\ 1.1,\ 0.25]$, $\mathbf{h}_{ti} = \mathbf{h}_{tq} = [0.25,\ 1\ 0.2]$. The frequency independent amplitude and phase imbalances are $g_t = g_r = 10\%$ and $\phi_t = \phi_r = 10^\circ$ respectively. We consider a multipath channel of $L = 4$ taps. The taps of the multipath channel are chosen independently with complex Gaussian distribution. CFO ζ is considered as the ratio of the actual CFO Δf to the subcarrier spacing $1/T.N$, where T is the sampling period. **Figure 2(a)** shows the iterative scheme employed to estimate the CFO. The figure shows that even for a small amount of CFO $\zeta = 0.032$ at 30 dB SNR, the estimation scheme is quite accurate after 5 iterations. For large CFOs, the estimation scheme will require even less number of iterations. **Figure 2(b)-(d)** show the performance curves (BER vs SNR) for three different RF impairment cases. The BER results depicted are obtained by averaging the BER curves over 10^4 independent channels. In all the three figures, we consider CFO $\zeta = 0.32$. The performance figures show that in the absence of any compensation scheme in place, the OFDM system is completely unusable. In Figure 2(b), we consider the case of only Rx IQ imbalance along with CFO. The TEQ length is $L_1' = 9$ taps where $L_a = 5$ and $L_b = 4$ taps. The compensation scheme proposed in [10] performs poorly as it does not consider the cyclic postfix elements in the OFDM symbol and thus it saturates at a higher BER. The Figure 2(c) considers both the Tx-Rx IQ imbalance along with CFO. As the proposed equalizer splits the compensation task between STS and LTS in TEQ and FEQ, it requires overall less number of training samples ($M_s \times N_t + M_l \times N$) for efficient equalization. Also the equalizers are much simpler to implement and can be optimized separately. In comparison, the PTEQ scheme [12] requires almost 25 LTS to achieve the same performance curve. Also in terms of complexity, the PTEQ requires ($4 \times L_r \times N$) coefficients to be resolved whereas the proposed scheme requires to resolve only ($L_1' + N + N$) coefficients. The Figure 2(d) considers the presence of only IQ imbalance in the system. In the case of both Tx and Rx IQ imbalance, the performance of the proposed method is similar to the FEQ in [9] and the PTEQ scheme without the CFO in [14]. Here there is no frequency smoothing scheme employed in the system. In the case of only Rx IQ Imbalance, a very good system performance is achievable for even as low as only 2 LTS symbols.

V. Conclusion

In this paper the joint effect of Tx-Rx IQ imbalance along with CFO and multipath channel distortions has been studied. A generally applicable compensation scheme has been developed that utilizes the availability of both STS and LTS symbols in the system. The resulting cascade of TEQ and FEQ equalizers provide an efficient compensation scheme in

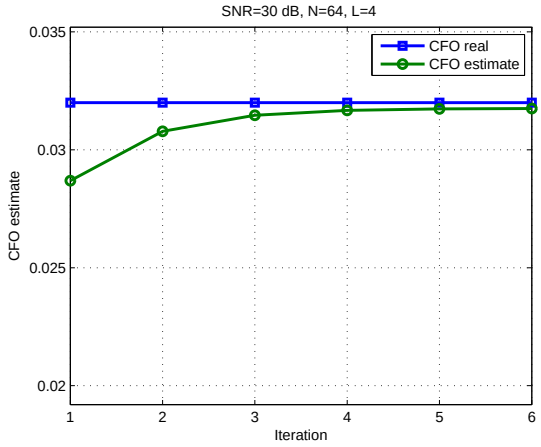

(a) CFO estimation with iterative method

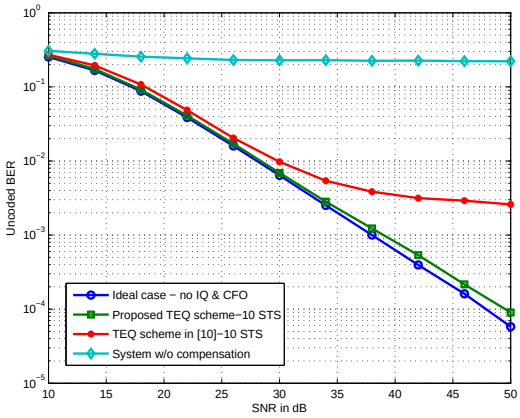

(b) BER vs SNR for Rx IQ imbalance with CFO

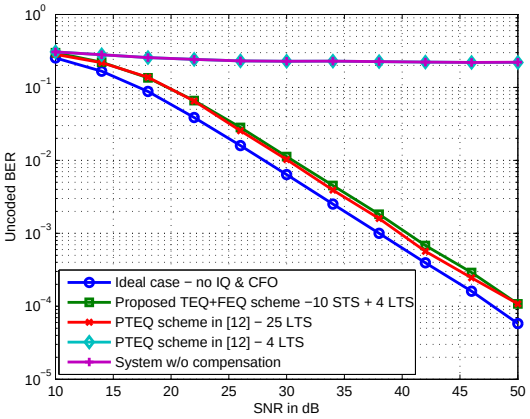

(c) BER vs SNR for Tx-Rx IQ imbalance with CFO

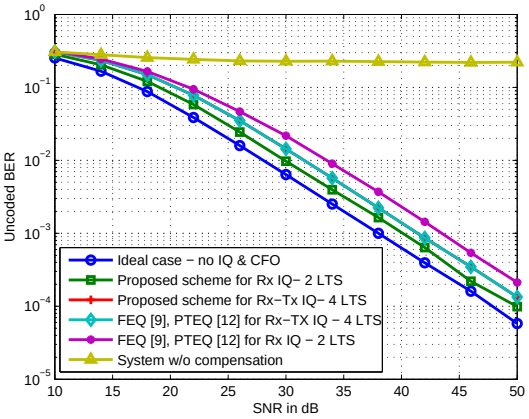

(d) BER vs SNR for Tx-Rx IQ imbalance

Fig. 2. Simulation results for OFDM with 64QAM constellation.

terms of both computational complexity as well as faster convergence. The simulation results verify the effectiveness of the proposed scheme.

REFERENCES

[1] A.A. Abidi,"Direct-conversion radio transceivers for digital communications," *IEEE Journal on Solid-State Circuits*, vol. 30, pp. 1399-1410, Dec. 1995.

[2] "IEEE standard 802.11a-1999: wireless LAN medium access control (MAC) & physical layer (PHY) specifications, high-speed physical layer in the 5 GHz band," 1999.

[3] I.Koffman and V.Roman, "Broadband wireless access solutions based on OFDM access in IEEE 802.16," *IEEE Communications Magazine*, vol. 40, no. 4, pp. 96-103, April 2002.

[4] "ETSI Digital Video Broadcasting; Framing structure, Channel Coding & Modulation for Digital TV," 2004.

[5] C.L.Liu, "Impact of I/Q imbalance on QPSK-OFDM-QAM detection," *IEEE Transactions on Consumer Electronics*, vol. 44, no. 8, pp. 984-989, Aug. 1998.

[6] T.Pollet, M. Van Bladel and M. Moeneclaey, "BER sensitivity of OFDM systems to carrier frequency offset and wiener phase noise," *IEEE Transactions on Communications*, vol. 43, no. (2/3/4), pp. 191-193, 1995.

[7] G.Xing, M. Shen and H. Liu, "Frequency offset and I/Q imbalance compensation for Direct-Conversion Receivers," *IEEE Transactions on Wireless Communications*, vol. 4, no. 2. pp. 673-680, March 2005.

[8] S.Fouladifard and H.Shafiee, "Frequency offset estimation in OFDM systems in presence of IQ imbalance," *Proceedings International Conference on Communications (ICC)*, Anchorage, AK, May 2003, pp. 2071-2075.

[9] A.Tarighat and A.H.Sayed, "OFDM systems with both transmitter & receiver IQ imbalances," in *Proc. IEEE 6th Workshop on Signal Processing Advances in Wireless Comm. (SPAWC)*, New York, NY, June 2005, pp. 735-739.

[10] J.Lin and E.Tsui, "Adaptive IQ imbalance correction for OFDM systems with frequency and timing offsets," in *IEEE Globecom*, Dallas, TX, Nov. 2004.

[11] M.Valkama,M.Renfors and V.Koivunen, "Compensation of frequency-selective IQ imbalances in wideband receivers: models and algorithms," *Proceedings IEEE 3rd Workshop on Signap Processing Advances in Wireless Communications (SPAWC)*, Taoyuan, Taiwan, Mar. 2001, pp. 42-45.

[12] L.Anttila, M. Valkama and M.Renfors, "Efficient mitigation of frequency-selective I/Q imbalances in OFDM receivers," *Proceedings IEEE 68th Vehicular Technology Conference (VTC)*, Calgary, Canada, Sept. 2008.

[13] J.Tubbax, B.Come, L.Van der Perre, M.Engels, M.Moonen and H.De Man, "Joint compensation of IQ imbalance and carrier frequency offset in OFDM systems," *Proceedings Radio and Wireless Conference*, Boston, MA, Aug. 2003, pp. 39-42.

[14] D.Tandur and M.Moonen, "Digital compensation of RF impairments for Broadband wireless systems," in Proc. of 14th IEEE Symposium on Communications and Vehicular Technology (SCVT), Delft, The Netherlands, Nov 2007.

[15] K.van Acker, G.Leus and M.Moonen,"Per-tone equalization for DMT based systems," *IEEE Transactions on Communications*, vol. 49, no. 1, Jan. 2001.