# STBC MIMO OFDM SYSTEMS WITH IMPLEMENTATION IMPAIRMENTS

*Deepaknath Tandur and Marc Moonen*

Katholieke Universiteit Leuven, E.E. Dept., Kasteelpark Arenberg 10, B-3001 Heverlee, Belgium
Email:{deepaknath.tandur, marc.moonen}@esat.kuleuven.be

## ABSTRACT

Multi-input multi-output (MIMO) systems are often realized with low cost front-end architectures, e.g. the so called direct conversion architectures. However, such systems are very sensitive to imperfections in the analog front-end, resulting in radio frequency (RF) impairments such as in-phase/quadrature-phase (IQ) imbalance and carrier frequency offset (CFO). The RF impairments in such low cost front-end systems are unavoidable and can result in a severe performance degradation. In this paper we propose a generally applicable equalization technique for space-time block coded (STBC) MIMO orthogonal frequency division multiplexing (OFDM) communication systems. The Alamouti based STBC scheme is examined in detail. It is shown that the compensation scheme can be easily extended to other higher order STBC systems. We consider a digital compensation scheme for joint transmitter and receiver IQ imbalance along with front-end filter mismatch, CFO and frequency selective channel distortions.

## 1. INTRODUCTION

Multiple-input multiple-output based orthogonal frequency division multiplexing (MIMO OFDM) is considered as one of the important transmission schemes for next generation wireless communication systems [1]. As the MIMO OFDM architecture has to support multiple parallel radio frequency (RF) front-ends, it becomes extremely important to keep these RF front-ends simple with minimal analog electronics so as to maintain the cost, size and power consumption within an acceptable limit.

The direct conversion based architecture provides a good implementation alternative compared to the traditional superheterodyne front-end architecture [2]. However, such a low cost front-end can be very sensitive to analog component imperfections, mainly due to manufacturing non-uniformity, leading to RF impairments such as in-phase/quadrature-phase (IQ) imbalance, carrier frequency offset (CFO), phase noise, etc. As next generation wireless systems will require more simplified, flexible and reconfigurable front-ends, realized in a scaled down fabrication technology, the effect of these imbalances will become even more severe. The resulting distortion may then lead to a dramatic performance degradation and limit the achievable data rate and thus needs to be properly compensated. Several articles [3]-[8] have been published to study the effects of these impairments and present compensation schemes for single-input single-output (SISO) based OFDM systems. Recently, the compensation of IQ imbalance for OFDM MIMO systems has been discussed in [8]-[9]. In [8], the authors propose a compensation scheme for receiver IQ imbalance, while in [9] a correction approach for combined transmitter and receiver IQ imbalance in a MIMO OFDM system is developed.

In this paper, we consider the combined effect of transmitter and receiver IQ imbalance along with front-end filter mismatch, CFO and frequency selective channel distortions in a space-time block coded (STBC) MIMO OFDM scenario. We consider a single-user point-to-point low cost system where a single local oscillator (LO) supports multiple antennas at the transmitter front-end. We examine the Alamouti based STBC scheme in detail but the compensation scheme can be easily extended to other higher order STBC systems. It is shown that by exploiting the structure of the STBC codes, an efficient receiver can be developed in the presence of RF impairments.

The paper is organized as follows: We first develop the input-output system model in Section 2. Section 3 describes the IQ imbalance and CFO compensation scheme. Results from a numerical performance evaluation are presented in Section 4 and finally conclusions are given in Section 5.

*Notation:* Vectors are indicated in bold and scalar parameters in normal font. Superscripts $\{\}^*, \{\}^T, \{\}^H$ represent conjugate, transpose and Hermitian respectively. $\mathbf{F}$ and $\mathbf{F}^{-1}$ represent the $N \times N$ discrete Fourier transform and its inverse. $\mathbf{I}_N$ is the $N \times N$ identity matrix and $0_{M\times N}$ is the $M \times N$ all zero matrix. Operators $\otimes$, $\star$ and . denote Kronecker product, convolution and component-wise vector multiplication respectively.

## 2. SYSTEM MODEL

Let $N_t$ denote the number of transmit antennas in an uncoded multi-input single-output (MISO) OFDM system. We first consider a system with a single receive antenna. In the context of STBC, the MIMO case with multiple receive antennas is a simple extension of the single receive antenna case. Let $\mathbf{S}_{(k)}$ (for $k = 1 \dots N_t$) be the frequency domain OFDM symbol of size $(N \times 1)$, to be transmitted over the $k^{th}$ transmit antenna. In order to derive the input-output system of equations, we do not yet consider the STBC codeword at this point. The frequency domain symbols $\mathbf{S}_{(k)}$ are transformed to the time domain by the inverse discrete Fourier transform (IDFT) operation. A cyclic prefix (CP) of length $\nu$ is then added to the head of each symbol. The resulting time domain baseband signal $\mathbf{s}_{(k)}$ is given as:

$$\mathbf{s}_{(k)} = \mathbf{P}\mathbf{F}^{-1}\mathbf{S}_{(k)} \tag{1}$$

where $\mathbf{P}$ is the cyclic prefix insertion matrix given by:

$$\mathbf{P} = \left[\begin{array}{c|c} 0_{(\nu\times N-\nu)} & \mathbf{I}_\nu \\ \hline & \mathbf{I}_N \end{array}\right]$$

We consider a low cost front-end point-to-point single user MISO system where all the transmit antennas are supported by a single local oscillator (LO). As the LO produces only a single frequency

This research work was carried out at the ESAT laboratory of the Katholieke Universiteit Leuven and was funded within the framework of a K.U. Leuven DOC-DB scholarship. The scientific responsibility is assumed by its authors.

tone, the IQ imbalance induced by the LO is generally considered to be frequency independent (FI) at the front-end, i.e, the IQ imbalance is constant over the entire OFDM symbol length. The different trace lengths between the LO and the respective antenna branch may result in a slightly different FI IQ imbalance for every antenna branch. We specify this FI IQ imbalance as an amplitude and phase mismatch of $g_{t(k)}$ and $\phi_{t(k)}$ at the transmitter front-end. The other analog components in the front-end such as the digital-to-analog converters (DAC), amplifiers, low pass filters (LPFs) and mixers generally result in a frequency selective (FS) IQ imbalance. Such FS IQ imbalance is particularly severe in wideband direct conversion transmitters and receivers. We represent this imbalance at the front-end by two mismatched filters with frequency responses given as $\mathbf{H}_{ti(k)} = \mathbf{F}\{\mathbf{h}_{ti(k)}\}$ and $\mathbf{H}_{tq(k)} = \mathbf{F}\{\mathbf{h}_{tq(k)}\}$ at the in-phase and quadrature-phase branch of the $k^{th}$ transmit antenna. Here $\mathbf{h}_{ti(k)}$ and $\mathbf{h}_{tq(k)}$ represent the impulse response of the respective mismatched filters. Following the derivation in [3], the equivalent baseband signal $\mathbf{p}$ at the $k^{th}$ transmit antenna can now be given as:

$$\mathbf{p}_{(k)} = \mathbf{g}_{t1(k)} \star \mathbf{s}_{(k)} + \mathbf{g}_{t2(k)} \star \mathbf{s}^*_{(k)} \tag{2}$$

where

$$\mathbf{g}_{t1(k)} = \mathbf{F}^{-1}\left\{\mathbf{G}_{t1(k)}\right\} = \mathbf{F}^{-1}\left\{\frac{\left[\mathbf{H}_{ti(k)} + g_{t(k)}e^{-j\phi_{t(k)}}\mathbf{H}_{tq(k)}\right]}{2}\right\}$$

$$\mathbf{g}_{t2(k)} = \mathbf{F}^{-1}\left\{\mathbf{G}_{t2(k)}\right\} = \mathbf{F}^{-1}\left\{\frac{\left[\mathbf{H}_{ti(k)} - g_{t(k)}e^{j\phi_{t(k)}}\mathbf{H}_{tq(k)}\right]}{2}\right\}$$

Here $\mathbf{g}_{t1(k)}$ and $\mathbf{g}_{t2(k)}$ are mostly truncated to length $L_t$ and then padded with $N - L_t$ zero elements. They represent the combined FI and FS IQ imbalance for the $k^{th}$ transmit antenna.

When the signal $\mathbf{p}_{(k)}$ is transmitted over a multipath frequency selective time invariant channel, then the received baseband signal $\mathbf{u}$ is given as:

$$\mathbf{u} = \sum_{k=1}^{N_t} \mathbf{h}_{(k)} \star \mathbf{p}_{(k)} + \mathbf{n} \tag{3}$$

where $\mathbf{h}_{(k)}$ is the baseband equivalent of the multipath time invariant channel of length $l_c$ between the $k^{th}$ transmit antenna and the receiver antenna. Here $\mathbf{n}$ is a proper complex additive white Gaussian noise. Finally, an expression similar to equation (2) can be used to model IQ imbalance at the receiver. Let $\mathbf{z}$ represent the down-converted baseband complex signal at the MISO OFDM receiver. This signal is distorted by combined FS and FI IQ imbalance given as $\mathbf{g}_{z1}$ and $\mathbf{g}_{z2}$ of length $L_r$ each. Both $\mathbf{g}_{z1}$ and $\mathbf{g}_{z2}$ are defined similar to $\mathbf{g}_{t1(k)}$ and $\mathbf{g}_{t2(k)}$ in equation (2). The received signal $\mathbf{z}$ can be written as:

$$\mathbf{z} = \mathbf{g}_{z1} \star \mathbf{u} + \mathbf{g}_{z2} \star \mathbf{u}^* \tag{4}$$

Substituting equation (2) and (3) in equation (4) leads to:

$$\begin{aligned}\mathbf{z} =& \sum_{k=1}^{N_t}\big[\left(\mathbf{g}_{z1} \star \mathbf{h}_{(k)} \star \mathbf{g}_{t1(k)} + \mathbf{g}_{z2} \star \mathbf{h}^*_{(k)} \star \mathbf{g}^*_{t2(k)}\right) \star \mathbf{s}_{(k)} \\ &+ \left(\mathbf{g}_{z1} \star \mathbf{h}_{(k)} \star \mathbf{g}_{t2(k)} + \mathbf{g}_{z2} \star \mathbf{h}^*_{(k)} \star \mathbf{g}^*_{t1(k)}\right) \star \mathbf{s}^*_{(k)}\big] \\ &+ \mathbf{g}_{z1} \star \mathbf{n} + \mathbf{g}_{z2} \star \mathbf{n}^* \\ =& \sum_{k=1}^{N_t}\left[\mathbf{d}_{1(k)} \star \mathbf{s}_{(k)} + \mathbf{d}_{2(k)} \star \mathbf{s}^*_{(k)}\right] + \mathbf{n}_c\end{aligned} \tag{5}$$

where $\mathbf{d}_1$ and $\mathbf{d}_2$ are the combined transmit IQ, channel and receive IQ impulse responses between the $k^{th}$ transmit antenna and the receive antenna. Both $\mathbf{d}_1$ and $\mathbf{d}_2$ are of length $L_t + L + L_r - 2$ and are assumed to be always shorter than or equal to the CP length $\nu$, i.e., $(L_t + L + L_r - 2 \leq \nu)$. Here, $\mathbf{n}_c$ is a zero mean improper complex noise vector due to the presence of the receiver IQ imbalance. Substituting equation (1) in equation (5) we obtain:

$$\mathbf{z} = \sum_{k=1}^{N_t}\left([\mathbf{O}_1|\mathbf{T}_{d1(k)}]\mathbf{P}\mathbf{F}^{-1}\mathbf{S}_{(k)} + [\mathbf{O}_1|\mathbf{T}_{d2(k)}]\mathbf{P}\mathbf{F}^{-1}\mathbf{S}_{m(k)}\right) + \mathbf{n}_c \tag{6}$$

where $\mathbf{z}$ is of dimension $(N \times 1)$, $\mathbf{O}_1 = 0_{(N\times\nu - L_T - L - L_r + 3)}$. $\mathbf{T}_{dp(k)}$ (for $p = 1, 2$) is an $(N \times N + L_t + L + L_r - 3)$ Toeplitz matrix with first column $[\mathbf{d}_{p_{(k)}(L_t+L+L_r-3)}, 0_{(1\times N-1)}]^T$ and first row $[\mathbf{d}_{p_{(k)}(L_t+L+L_r-3)}, \ldots, \mathbf{d}_{p_{(k)}(0)}, 0_{(1\times N-1)}]$. Here $()_m$ denotes the mirroring operation in which the vector indices are reversed, such that $\mathbf{S}_m[l] = \mathbf{S}[l_m]$ where $l_m = 2 + N - l$ for $l = 2 \ldots N$ and $l_m = l$ for $l = 1$.

In the frequency domain, equation (5) after the CP removal can be written as:

$$\begin{aligned}\mathbf{Z} =& \sum_{k=1}^{N_t}[\mathbf{D}_{1(k)}.\mathbf{S}_{(k)} + \mathbf{D}_{2(k)}.\mathbf{S}^*_{m(k)}] + \mathbf{N}_c \\ =& \sum_{k=1}^{N_t}[(\mathbf{G}_{z1}.\mathbf{H}_{(k)}.\mathbf{G}_{t1(k)} + \mathbf{G}_{z2}.\mathbf{H}^*_{m(k)}.\mathbf{G}^*_{t2m(k)}).\mathbf{S}_{(k)} \\ &+ (\mathbf{G}_{z1}.\mathbf{H}_{(k)}.\mathbf{G}_{t2(k)} + \mathbf{G}_{z2}.\mathbf{H}^*_{m(k)}.\mathbf{G}^*_{t1m(k)}).\mathbf{S}^*_{m(k)}] + \mathbf{N}_c\end{aligned} \tag{7}$$

where $\mathbf{Z}, \mathbf{D}_{1(k)}, \mathbf{D}_{2(k)}, \mathbf{H}_{(k)}$ and $\mathbf{N}_c$ are frequency domain representations of $\mathbf{z}, \mathbf{d}_{1(k)}, \mathbf{d}_{2(k)}, \mathbf{h}_{(k)}$ and $\mathbf{n}_c$. Equation (7) shows that the received symbol $\mathbf{Z}$ is a sum of scaled versions of all $N_t$ transmitted OFDM symbols with a power leakage from the mirror carrier ($\mathbf{S}^*_{m(k)}$) to the carrier under consideration ($\mathbf{S}_{(k)}$). This power leakage from the mirror carrier results in Inter-Carrier-Interference (ICI) and can severely deteriorate the performance of the system. Note that if there is no IQ imbalance in the system, then $g_{t(k)} = g_{z(k)} = 1, \phi_{t(k)} = \phi_{z(k)} = 0, \mathbf{H}_{ti(k)} = \mathbf{H}_{tq(k)} = \mathbf{H}_{t(k)}, \mathbf{H}_{zi} = \mathbf{H}_{zq} = \mathbf{H}_z$. Thus $\mathbf{G}_{t1(k)} = \mathbf{H}_{t(k)}, \mathbf{G}_{z1} = \mathbf{H}_z$ and $\mathbf{G}_{t2(k)} = 0, \mathbf{G}_{z2} = 0$ leading to:

$$\mathbf{Z} = \sum_{k=1}^{N_t}\left[(\mathbf{H}_z.\mathbf{H}_{(k)}.\mathbf{H}_{t(k)}.\mathbf{S}_{(k)}\right] + \mathbf{H}_z.\mathbf{N} \tag{8}$$

The baseband signal $\mathbf{Z}$ is now a scaled version of the sum of all $\mathbf{S}_{(k)}$ with no ICI from the mirror carrier.

The second important RF impairment we consider in this paper is the carrier frequency offset (CFO). We assume a CFO $\Delta f$ is present in the MISO OFDM system together with transmitter and receiver IQ imbalance. In this case the final expression for the received signal $\mathbf{z}$ after front-end receiver distortion can be given as [4]:

$$\mathbf{z} = \mathbf{g}_{z1} \star (\mathbf{u}.e^{j2\pi\Delta f.\mathbf{t}}) + \mathbf{g}_{z2} \star (\mathbf{u}^*.e^{-j2\pi\Delta f.\mathbf{t}}) \tag{9}$$

where $e^{j\mathbf{x}}$ is the element-wise exponential function on the vector $\mathbf{x}$ and $\mathbf{t}$ is a time vector. The joint effect of both transmitter and receiver IQ imbalance along with CFO and channel distortions results in a severe performance degradation, as will be shown in section 4, and so a digital compensation scheme is needed. In the next section, we develop a generally applicable compensation scheme for a STBC MIMO OFDM system based on equation (9).

## 3. IQ IMBALANCE AND CFO COMPENSATION

We will now consider an Alamouti (2x1) based STBC MIMO OFDM system i.e., the transmitter has 2 antennas and the receiver has 1 an-

tenna. The STBC codeword $\mathbf{C}_a$ can be given as:

$$\mathbf{C}_a = \begin{pmatrix} \mathbf{S}_1 & \mathbf{S}_2^* \\ \mathbf{S}_2 & -\mathbf{S}_1^* \end{pmatrix} \tag{10}$$

where the element of the $k$th row and the $i$th column of $\mathbf{C}_a$ denotes the OFDM symbol sent from the $k$th transmit antenna at time $i$. We will first consider the case of only transmitter IQ imbalance in the OFDM system. The joint compensation scheme with receiver IQ imbalance and CFO will be explained later. Thus, in the case of only transmitter IQ imbalance, the received signal in equation (7) can be written as:

$$\mathbf{Z}^{(i)} = \sum_{k=1}^{N_t} [\mathbf{H}_{(k)}.\mathbf{G}_{t1(k)}.\mathbf{S}_{(k)}^{(i)} + \mathbf{H}_{(k)}.\mathbf{G}_{t2(k)}.\mathbf{S}_{m(k)}^{*(i)}] + \mathbf{N}_c^{(i)} \tag{11}$$

Here $i = \{1, 2\}$ corresponds to the time index of the Alamouti codeword $\mathbf{C}_a$. The term $\mathbf{H}_z$ (shown in equation (8)) is ignored here as it only results in a scaled version of the received signal $\mathbf{Z}^{(i)}$. Equation (11) can now be rewritten in matrix form as:

$$\begin{pmatrix} \mathbf{Z}^{(1)} \\ \mathbf{Z}^{(2)} \end{pmatrix} = \begin{pmatrix} \mathbf{S}_1 & \mathbf{S}_{1m}^* & \mathbf{S}_2 & \mathbf{S}_{2m}^* \\ \mathbf{S}_2^* & \mathbf{S}_{2m} & -\mathbf{S}_1^* & -\mathbf{S}_{1m} \end{pmatrix} \begin{pmatrix} \mathbf{H}_{(1)}.\mathbf{G}_{t1(1)} \\ \mathbf{H}_{(1)}.\mathbf{G}_{t2(1)} \\ \mathbf{H}_{(2)}.\mathbf{G}_{t1(2)} \\ \mathbf{H}_{(2)}.\mathbf{G}_{t2(2)} \end{pmatrix} + \begin{pmatrix} \mathbf{N}_c^{(1)} \\ \mathbf{N}_c^{(2)} \end{pmatrix} \tag{12}$$

By considering the conjugate and mirror operation on the received signal and then exploiting the Alamouti code structure, equation (12) can be written as:

$$\begin{pmatrix} \mathbf{Z}^{(1)} \\ \mathbf{Z}^{*(2)} \\ \mathbf{Z}_m^{*(1)} \\ \mathbf{Z}_m^{(2)} \end{pmatrix} = \begin{pmatrix} \Delta_{1,1} & \Delta_{1,2} \\ \Delta_{2,1} & \Delta_{2,2} \end{pmatrix} \begin{pmatrix} \mathbf{S}_1 \\ \mathbf{S}_2 \\ \mathbf{S}_{1m}^* \\ \mathbf{S}_{2m}^* \end{pmatrix} + \begin{pmatrix} \mathbf{N}_c^{(1)} \\ \mathbf{N}_c^{*(2)} \\ \mathbf{N}_{cm}^{*(1)} \\ \mathbf{N}_{cm}^{(2)} \end{pmatrix} \tag{13}$$

where the sub-blocks are given as:

$$\begin{aligned} \Delta_{1,1} &= \begin{pmatrix} \mathbf{H}_{(1)}.\mathbf{G}_{t1(1)} & \mathbf{H}_{(2)}.\mathbf{G}_{t2(1)} \\ -\mathbf{H}_{(2)}^*.\mathbf{G}_{t2(1)}^* & \mathbf{H}_{(1)}^*.\mathbf{G}_{t1(1)}^* \end{pmatrix} \\ \Delta_{1,2} &= \begin{pmatrix} \mathbf{H}_{(1)}.\mathbf{G}_{t1(2)} & \mathbf{H}_{(2)}.\mathbf{G}_{t2(2)} \\ -\mathbf{H}_{(2)}^*.\mathbf{G}_{t2(2)}^* & \mathbf{H}_{(1)}^*.\mathbf{G}_{t1(2)}^* \end{pmatrix} \\ \Delta_{2,1} &= \begin{pmatrix} \mathbf{H}_{(1)m}^*.\mathbf{G}_{t1(2)m}^* & \mathbf{H}_{(2)m}^*.\mathbf{G}_{t2(2)m}^* \\ -\mathbf{H}_{(2)m}.\mathbf{G}_{t2(2)m} & \mathbf{H}_{(1)m}.\mathbf{G}_{t1(2)m} \end{pmatrix} \\ \Delta_{2,2} &= \begin{pmatrix} \mathbf{H}_{(1)m}^*.\mathbf{G}_{t1(1)m}^* & \mathbf{H}_{(2)m}^*.\mathbf{G}_{t2(1)m}^* \\ -\mathbf{H}_{(2)m}.\mathbf{G}_{t2(1)m} & \mathbf{H}_{(1)m}.\mathbf{G}_{t1(1)m} \end{pmatrix} \end{aligned} \tag{14}$$

It should be noted that in the case of no transmitter IQ imbalance, the sub-blocks $\Delta_{1,2}$ and $\Delta_{2,1}$ will vanish, and then a regular Alamouti decoder can be used to recover the transmitted symbol. In the present case, let $\overset{\wedge}{\mathbf{S}}{}^{(1)}_{(k)}[l]$ be the estimate for the $l$th sub-carrier of the OFDM symbol transmitted over $k$th antenna at STBC time index 1.This estimate is then obtained as:

$$\overset{\wedge}{\mathbf{S}}{}^{(1)}_{(k)}[l] = \begin{pmatrix} \mathbf{v}_{1(k)}[l] \\ \mathbf{v}_{2(k)}[l] \\ \mathbf{v}_{3(k)}[l] \\ \mathbf{v}_{4(k)}[l] \end{pmatrix}^T \begin{pmatrix} \mathbf{Z}^{(1)}[l] \\ \mathbf{Z}^{*(2)}[l] \\ \mathbf{Z}_m^{*(1)}[l] \\ \mathbf{Z}_m^{(2)}[l] \end{pmatrix} \tag{15}$$

where $\mathbf{v}_{p(k)}[l]$ for $(p = \{1 \dots 4\})$ are one tap coefficients of the frequency domain equalizer. Based on equation (15), a maximum-likelihood (ML), least-square (LS) or minimum mean-square-error (MMSE) based equalizer can be developed at the receiver side (see e.g. [6]).

Similarly, the compensation scheme can be easily extended for higher order STBC MIMO OFDM systems. It should be noted that the design of optimized STBC codes is beyond the scope of this paper. We consider the case of a quasi-orthogonal STBC (QOSTBC - 4x1) system where the STBC codeword $\mathbf{C}_b$ can be given as:

$$\mathbf{C}_b = \begin{pmatrix} \mathbf{S}_1 & -\mathbf{S}_2^* & -\mathbf{S}_3^* & \mathbf{S}_4 \\ \mathbf{S}_2 & \mathbf{S}_1^* & -\mathbf{S}_4^* & -\mathbf{S}_3 \\ \mathbf{S}_3 & -\mathbf{S}_4^* & \mathbf{S}_1^* & -\mathbf{S}_2 \\ \mathbf{S}_4 & \mathbf{S}_3^* & \mathbf{S}_2^* & \mathbf{S}_1 \end{pmatrix} \tag{16}$$

In this case, the estimate $\overset{\wedge}{\mathbf{S}}{}^{(1)}_{(k)}[l]$ can be obtained as:

$$\overset{\wedge}{\mathbf{S}}{}^{(1)}_{(k)}[l] = tr \left\{ \begin{pmatrix} \mathbf{v}_{1(k)}[l] & \mathbf{v}_{5(k)}[l] \\ \mathbf{v}_{2(k)}[l] & \mathbf{v}_{6(k)}[l] \\ \mathbf{v}_{3(k)}[l] & \mathbf{v}_{7(k)}[l] \\ \mathbf{v}_{4(k)}[l] & \mathbf{v}_{8(k)}[l] \end{pmatrix}^T \begin{pmatrix} \mathbf{Z}^{(1)}[l] & \mathbf{Z}_m^{*(1)}[l] \\ \mathbf{Z}^{*(2)}[l] & \mathbf{Z}_m^{(2)}[l] \\ \mathbf{Z}^{*(3)}[l] & \mathbf{Z}_m^{(3)}[l] \\ \mathbf{Z}^{(4)}[l] & \mathbf{Z}_m^{*(4)}[l] \end{pmatrix} \right\} \tag{17}$$

where $tr(.)$ denotes the trace of a matrix. It can be observed from equations (15) and (17) that we need to solve $(2 \times N_t^2)$ coefficients in order to estimate the transmitted symbols in a MISO OFDM system distorted by transmitter IQ imbalance and the multipath channel.

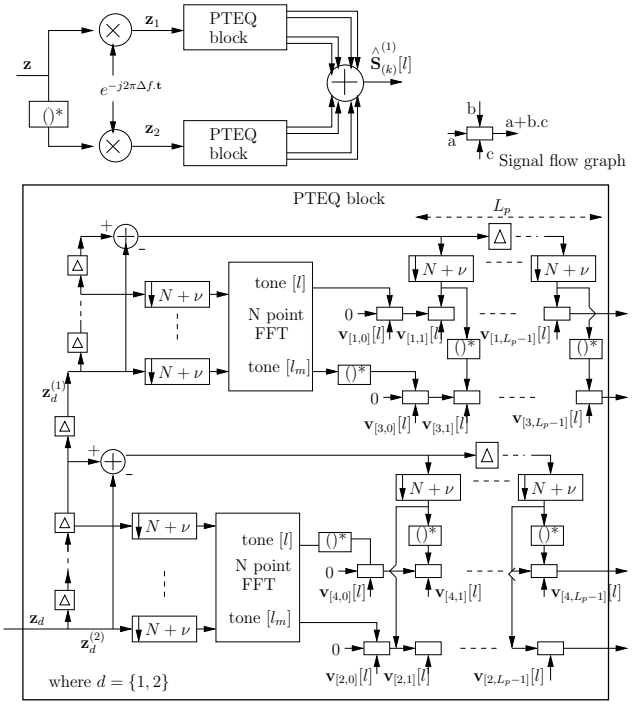


**Fig. 1**. PTEQ compensation for Alamouti MIMO OFDM system

Now in order to also compensate the receiver IQ imbalance and the CFO, we first design two time domain equalizers (TEQs) $\mathbf{w}_1$ and $\mathbf{w}_2$ each of length $L' = L_r$ taps. The TEQ $\mathbf{w}_1$ is applied to the signal $\mathbf{z}$ and the TEQ $\mathbf{w}_2$ to the signal $\mathbf{z}^*$ (obtained by taking the conjugate of the received signal in equation (9)). Now $\mathbf{z}$ in equation (6) is considered of length $(N + L' - 1 \times 1)$, where $\mathbf{O}_1 = 0_{(N+L'-1\times\nu-L_t-L-L_r-L'+4)}, \mathbf{T}_{dp(k)}$ (for $p = 1, 2$) is of size $(N + L' - 1 \times N + L_t + L + L_r + L' - 4)$ with first column

$[\mathbf{d}_{p_{(k)}(L_t+L+L_r-3)}, 0_{(1\times N+L'-1)}]^T$ and first row
$[\mathbf{d}_{p_{(k)}(L_t+L+L_r-3)}, \ldots, \mathbf{d}_{p_{(k)}(0)}, 0_{(1\times N+L'-2)}]$. This leads to:

$$\begin{aligned}\mathbf{z}_t =& \mathbf{w}_1 \star \mathbf{z} + \mathbf{w}_2 \star \mathbf{z}^* = \underbrace{(\mathbf{w}_1 \star \mathbf{g}_{z1} + \mathbf{w}_2 \star \mathbf{g}^*_{z2})}_{\mathbf{f}_1} \star (\mathbf{u}.e^{j2\pi\Delta f.\mathbf{t}}) \\ &+ \underbrace{(\mathbf{w}_1 \star \mathbf{g}_{z2} + \mathbf{w}_2 \star \mathbf{g}^*_{z1}) \star (\mathbf{u}^*.e^{-j2\pi\Delta f.\mathbf{t}})}_{\mathbf{f}_2}\end{aligned} \tag{18}$$

where $\mathbf{z}_t$ is of size $(N \times 1)$ and the design target for $\mathbf{w}_1$ and $\mathbf{w}_2$ is such that the $\mathbf{f}_2$ term vanishes. This is possible when $\mathbf{w}_1 = \mathbf{g}^*_{z1}$ and $\mathbf{w}_2 = -\mathbf{g}_{z2}$. Thus, $\mathbf{z}_t$ is finally free of any receiver IQ imbalance (term $\mathbf{f}_2$ containing $\mathbf{u}^*$ has been eliminated) along with the negative of the frequency offset.

At this point, we can de-rotate $\mathbf{z}_t$ with the estimate of the CFO obtained from any robust CFO estimation algorithm (see e.g. [4] and [5]). For the time being, we assume that these estimation algorithms can provide us with an ideal and accurate value of the CFO estimate. This then leads to:

$$\widetilde{\mathbf{z}}_t = \mathbf{z}_t.e^{-j2\pi\Delta f.\mathbf{t}} = \widetilde{\mathbf{f}}_1 \star \mathbf{u} \tag{19}$$

where $\widetilde{\mathbf{f}}_1 = \mathbf{f}_1.(e^{-j2\pi\Delta f.(0\ldots(L_r-1))})$. The resulting vector $\widetilde{\mathbf{z}}_t$ is now free of time-dependent CFO. $\widetilde{\mathbf{z}}_t$ now contains only frequency selective transmitter IQ imbalance along with channel and noise distortions. In conjunction with the TEQ scheme, a DFT is applied to each of the filtered sequences $\widetilde{\mathbf{z}}_t$. The output of the DFT is then applied to a frequency domain equalizer (FEQ) as per equations (15) and (17) in order to obtain the estimate of the transmitted symbol $\overset{\wedge}{\mathbf{S}}{}^{(1)}_{(k)}[l]$.

A general disadvantage of using this scheme is that the TEQ equalizes all the tones "in a combined fashion" and as a result it limits the performance of the system. Moreover the TEQ also operates at a higher sampling rate, thus making the equalization process expensive. The entire equalization process can be simplified by transferring the TEQ structure into the frequency domain and then combining it with the remaining frequency domain equalizer, resulting in frequency domain per-tone equalizer (PTEQ) [11]. In order to obtain the PTEQ structure, we first swap the TEQ filtering operation with the multiplication of the negative CFO estimate. Now the TEQ $\mathbf{w}_1$ is applied to the signal $\mathbf{z}_1 = \mathbf{z}.e^{-j2\pi\Delta f.\mathbf{t}}$ and the TEQ $\mathbf{w}_2$ is applied to the signal $\mathbf{z}_2 = \mathbf{z}^*.e^{-j2\pi\Delta f.\mathbf{t}}$. The swapped TEQ position can now be transferred to the frequency domain resulting in $2 \times N_t$ PTEQs, each employing one DFT and $L_p = L'-1$ difference terms. In the Alamouti case, equation (11) is modified as follows:

$$\overset{\wedge}{\mathbf{S}}{}^{(1)}_{(k)}[l] = \sum_{d=1}^{2} \begin{pmatrix}\mathbf{v}_{1,d(k)}[l] \\ \mathbf{v}_{2,d(k)}[l] \\ \mathbf{v}_{3,d(k)}[l] \\ \mathbf{v}_{4,d(k)}[l]\end{pmatrix}^T \begin{pmatrix}\mathbf{F}_i[l]\mathbf{z}^{(1)}_d \\ (\mathbf{F}_i[l]\mathbf{z}^{(2)}_d)^* \\ (\mathbf{F}_i[l_m]\mathbf{z}^{(1)}_d)^* \\ \mathbf{F}_i[l_m]\mathbf{z}^{(2)}_d\end{pmatrix} \tag{20}$$

where $\mathbf{v}_{p,d(k)}[l]$ (for $p = \{1\ldots4\}$ and $d = \{1,2\}$) are PTEQs of size $(L' \times 1)$. $\mathbf{F}_i[l]$ is defined as:

$$\mathbf{F}_i[l] = \left[\begin{array}{c|c|c} \mathbf{I}_{L'-1} & 0_{L'-1\times N-L'+1} & -\mathbf{I}_{L'-1} \\ \hline 0_{1\times L'-1} & \mathbf{F}[l] & \end{array}\right]$$

where the first block row in $\mathbf{F}_i[l]$ is seen to extract the difference terms, while the last row corresponds to the single DFT. The PTEQ compensation scheme for the Alamouti STBC MIMO OFDM system is shown in **Figure 1**. Similarly, equation (17) can also be modified to estimate $\overset{\wedge}{\mathbf{S}}{}^{(1)}_{(k)}[l]$ in the QOSTBC MIMO OFDM system impaired with joint transmitter and receiver IQ imbalance along with CFO and channel distortions.

We arrived at equation (20), assuming that we accurately know $\Delta f$. In practise, the CFO estimation algorithm may not be precise leading to some residual CFO $\psi = \Delta\widetilde{f}$ in the resulting vector $\widetilde{\mathbf{z}}_t$ of equation (19). This leads to a poor $\overset{\wedge}{\mathbf{S}}{}^{(1)}_{(k)}[l]$ symbol estimate due to residual ICI in the frequency domain. The performance of the equalizer can be further improved by first keeping the PTEQ length fixed and then searching amongst the various possible residual CFO values $\overset{\wedge}{\psi}$ such that the error in the $\overset{\wedge}{\mathbf{S}}{}^{(1)}_{(k)}[l]$ estimation is minimized. As we already have a good but not sufficiently accurate CFO estimate, the search is now restricted to a narrow range of values. Overall this leads to a much more accurate estimation of CFO. The PTEQ coefficients for the Alamouti case can then be obtained based on the following MSE minimization:

$$\begin{pmatrix} min \\ \overset{\wedge}{\psi} \\ \mathbf{v}_{p,d(k)}[l]\end{pmatrix} \mathbb{E}\left\{\left|\mathbf{S}^{(1)}_{(k)}[l] - \sum_{d=1}^{2}\begin{pmatrix}\mathbf{v}_{1,d(k)}[l] \\ \mathbf{v}_{2,d(k)}[l] \\ \mathbf{v}_{3,d(k)}[l] \\ \mathbf{v}_{4,d(k)}[l]\end{pmatrix}^T \begin{pmatrix}\mathbf{F}_i[l]\mathbf{z}^{(1)}_d \\ (\mathbf{F}_i[l]\mathbf{z}^{(2)}_d)^* \\ (\mathbf{F}_i[l_m]\mathbf{z}^{(1)}_d)^* \\ \mathbf{F}_i[l_m]\mathbf{z}^{(2)}_d\end{pmatrix}\right|^2\right\} \tag{21}$$

where $\mathbb{E}\{.\}$ is the expectation operator and $p = \{1\ldots4\}$.

The PTEQ scheme based on equation (20) is a general structure which can be further simplified for particular sub-problems. For example, in the presence of only receiver IQ imbalance along with CFO in the system, the coefficients $\mathbf{v}_{3,p(k)}[l]$ and $\mathbf{v}_{4,p(k)}[l]$ can be set to zero. Thus in this case only half the number of coefficients are to be determined in the PTEQ scheme. Similarly in the presence of only IQ imbalance at both the transmitter and receiver and no CFO in the system, the PTEQ can be equalized based on equation (15). Thus the PTEQ is reduced to a first order filter, i.e., a filter length equal to 1 is sufficient for compensation [7]. The proposed equalization scheme can also be extended for the case of insufficient CP length, i.e. when the CP length is shorter than or equal to the combined channel, transmitter and receiver filter impulse response length $(\nu \leq L_t + L + L_r - 2)$. In this case, besides the ICI within the OFDM symbol mainly due to IQ imbalance and CFO, there is also interference from the adjacent OFDM symbol leading to inter-block-interference (IBI). In order to compensate the ICI and IBI effect, the PTEQ length may have to be increased suitably to obtain sufficient improvement in performance [7]. The influence of IBI has not been considered in this paper in order to keep the data model simple.

## 4. SIMULATION RESULTS

We consider a system very similar to the MISO extension of the IEEE 802.11a standard in order to evaluate the compensation scheme in the presence of IQ imbalance and CFO. The performance comparison is made with an ideal system with no front-end distortion and with a system with no compensation algorithm included. The parameters used in the simulation are as follows: OFDM symbol length $N = 64$, CP length $\nu = 16$. The multipath channel is of length $L_c = 4$. The taps of the multipath channel are chosen independently with complex Gaussian distribution. We consider CFO $\zeta = 0.32$, where $\zeta$ is the ratio of the actual CFO $\Delta f$ to the sub-carrier spac-

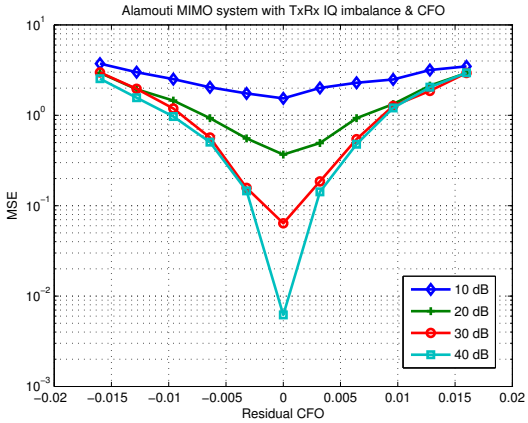


(a) MSE vs residual CFO error

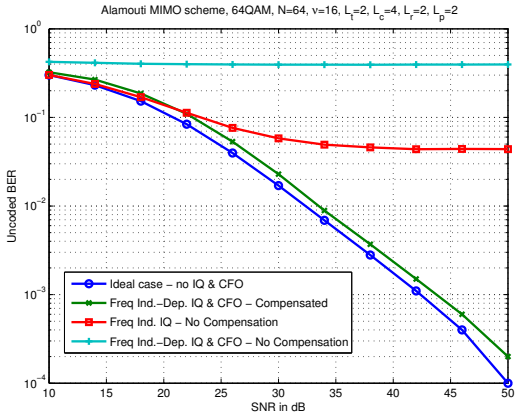


(b) BER vs SNR

**Fig. 2**. Simulations results obtained for 64QAM MIMO OFDM system based on Alamouti STBC.

ing $1/T.N$, and where $T$ is the sampling period. The transmitter and receiver front-end mismatched filter impulse responses are $\mathbf{h}_{ti(k)} = \mathbf{h}_{zi} = [0.1,\ 0.9]$ and $\mathbf{h}_{tq(k)} = \mathbf{h}_{zq} = [0.9,\ 0.1]$, the frequency independent amplitude imbalance $g_{t(k)} = g_z = 5\%$ and phase imbalance $\phi_{t(k)} = \phi_z = 5^\circ$. It is to be noted that the same IQ imbalance values are kept across all the antenna branches so as to keep the simulation process simple. Similar compensation results will be obtained for different IQ imbalance values as well.

**Figure (2)** shows the simulation results obtained for a 64QAM MISO OFDM system based on Alamouti STBC. Similar results will be obtained for higher order STBC systems. In Figure 2(a), we search for an optimal residual CFO value $\hat{\psi}$ for a PTEQ of fixed length $L' = 2$ . The figure shows the MSE vs error in residual CFO estimation $e_r = \hat{\zeta}_r - \zeta_r$ where $\zeta_r = \psi.T.N$. It can be seen that for the correct estimate of the residual CFO i.e, $(\hat{\zeta}_r = \zeta_r)$, the MSE is minimum. There is also a sudden dip in MSE at the exact residual CFO estimate and this becomes more prominent as the SNR is increased from 10 dB to 40 dB. Thus the search for the accurate residual CFO value becomes much easier at higher values of SNR, leading to a significant improvement in performance. The PTEQ coefficients obtained for this residual CFO estimate $\hat{\zeta}_r$ are then subsequently used for equalization. The Figure 2(b) shows the performance curves i.e BER vs SNR. Every channel realization is independent of the previous one and the BER results depicted are obtained by averaging the BER curves over $10^4$ independent channels. In the presence of frequency selective transmitter and receiver IQ imbalance and CFO with no compensation scheme in place, the MIMO OFDM system is completely unusable. Even for the case when there is only frequency independent IQ imbalance, the BER is very high. With the compensation scheme in place, the performance is very close to the ideal case. For low SNR, it may be difficult to determine accurately the residual CFO and the performance suffers slightly compared to the system with no CFO and also no compensation scheme in place. The compensation performance depends on how accurately the adaptive equalizer coefficients can converge to the ideal values.

## 5. CONCLUSIONS

In this paper the joint effect of transmitter and receiver frequency selective IQ imbalance, CFO and multipath channel distortions has been studied for STBC MIMO OFDM systems. A compensation scheme has been developed for such distortions in the digital domain. The compensation scheme provides a very efficient, post-FFT equalization with performance very close to the ideal case.

## 6. REFERENCES


[1] G.Stuber, J.Barry, S.Mclaughlin, Y.Li, M.Ingram and T.Pratt, "Broadband MIMO-OFDM Wireless Communications", *Proceedings of the IEEE*, vol. 92, no. 2, pp. 271-294, Feb. 2004.

[2] B.Razavi, "Design considerations for direct-conversion receivers," *IEEE Transactions on Circuits and Systems*, vol. 44, no. 6, pp. 428-435, June 1997.

[3] M.Valkama,M.Renfors and V.Koivunen, "Compensation of frequency-selective IQ imbalances in wideband receivers: models and algorithms," in *Proc. IEEE 3rd SPAWC workshop*, Taoyuan, Taiwan, Mar. 2001, pp. 42-45.

[4] J.Tubbax, B.Come, L.Van der Perre, M.Engels, M.Moonen and H.De Man, "Joint compensation of IQ imbalance and carrier frequency offset in OFDM systems," in *Proc. Radio and Wireless Conference*, Boston, MA, Aug. 2003, pp. 39-42.

[5] S.Fouladifard and H.Shafiee, "Frequency offset estimation in OFDM systems in presence of IQ imbalance," in *Proc. IEEE ICC*, Anchorage, AK, May 2003, pp. 2071-2075.

[6] D.Tandur and M.Moonen, "Joint compensation of OFDM transmitter and receiver IQ imbalance in the presence of carrier frequency offset", in *Proc. 14th EUSIPCO conference*, Florence, Italy, Sep. 2006, 5 p.

[7] D.Tandur and M.Moonen, "Joint compensation of OFDM frequency selective transmitter and receiver IQ imbalance, in *Proc. of IEEE ICASSP*, Honolulu, Hi, April 2007, pp. III-81.

[8] A.Tarighat and A.H.Sayed, "MIMO OFDM receivers for systems with IQ imbalances," *IEEE Trans. on Signal Processing*, vol. 53, no. 9, pp. 3583-3596, Sept. 2005.

[9] T.Schenck, P.Smulders and E.Fledderus, "Estimation and compensation of frequency selective Tx/Rx IQ imbalance in MIMO OFDM systems", in *Proc. IEEE ICC*, Istanbul, Turkey, June 2006, pp. 251-256.

[10] S.M.Alamouti,"A simple transmit diversity technique for wireless communications", *IEEE J. Select. Areas in Comm.*, vol. 16 pp., 1451-1458, Oct. 1998.

[11] K.van Acker, G.Leus and M.Moonen, "Per-tone equalization for DMT based systems," *IEEE Trans. on Comm.*, vol. 49, no. 1, Jan. 2001.