Katholieke Universiteit Leuven

Departement Elektrotechniek

ESAT-SISTA/TR 2002-20

Adding Causal and Anti–Causal Filter Taps to Enhance the Performance of Subband Adaptive Filters [1]

Koen Eneman, Marc Moonen [2]

February 2002
Published in the Proceedings of the IEEE Benelux Signal Processing Symposium,
Leuven, Belgium, March 21-22, 2002

[1]This report is available by anonymous ftp from *ftp.esat.kuleuven.ac.be* in the directory *pub/SISTA/eneman/reports/02-20.ps.gz*

[2]ESAT (SISTA) - Katholieke Universiteit Leuven, Kasteelpark Arenberg 10, 3001 Leuven (Heverlee), Belgium, Tel. 32/16/321809, Fax 32/16/321970, WWW: *http://www.esat.kuleuven.ac.be/sista*. E-mail: *koen.eneman@esat.kuleuven.ac.be* This research work was carried out at the ESAT laboratory of the Katholieke Universiteit Leuven, in the frame of the Concerted Research Action GOA–MEFISTO–666 of the Flemish Government and was partly funded by IWT project MUSETTE ('Multimicrophone Signal Enhancement Techniques for handsfree telephony and voice controlled systems'). The scientific responsibility is assumed by its authors.

ADDING CAUSAL AND ANTI–CAUSAL FILTER TAPS TO ENHANCE THE PERFORMANCE OF SUBBAND ADAPTIVE FILTERS

Koen Eneman

K.U.Leuven, ESAT–SISTA
Kasteelpark Arenberg 10, 3001 Heverlee,
Belgium
koen.eneman@esat.kuleuven.ac.be

Marc Moonen

K.U.Leuven, ESAT–SISTA
Kasteelpark Arenberg 10, 3001 Heverlee,
Belgium
marc.moonen@esat.kuleuven.ac.be

ABSTRACT

Subband adaptive filters are attractive as they offer a low complexity alternative to standard adaptive filtering schemes such as the LMS algorithm. Instead of a single fullband L_{FB}–taps FIR filter, M shorter subband filters are adapted in parallel. At first sight one could suggest to choose the subband filter lengths equal to $L_{SB} = \frac{L_{FB}}{N}$, where N is the downsampling factor. However, the assumption of having a satisfactory performance with M subband filters with reduced length $\frac{L_{FB}}{N}$ seems to be quite wrong. A discussion on this and some design rules to choose the appropriate subband filter length will be the topic of this paper.

1. INTRODUCTION

Multirate schemes such as the subband adaptive filter have been a topic of interest for many years now [1] [2]. They are employed to identify high–order FIR systems and are a promising alternative to the classical LMS algorithm. For this kind of application the LMS adaptive filter is less attractive as it has a larger complexity and its convergence behavior is generally worse.
It is often claimed that subband processing leads to a considerable complexity reduction w.r.t. the fullband approach, offering a complexity gain equal to the number of subbands in the limiting case where the subbands are maximally, i.e. critically downsampled. Furthermore, better performance is expected owing to the fact that after appropriate subsampling each subband signal will have a flatter spectrum than the fullband signal.
It is shown that a residual undermodelling error will remain unless infinitely long adaptive filters are employed in each subband. The adaptive filter has to model (many) more coefficients than usually expected and extra filter taps have to be added both in the causal as well as in the anti–causal direction. Two design methods will be presented based on which the appropriate subband filter order can be estimated.

2. SUBBAND ADAPTIVE FILTERING

Subband adaptive filtering schemes have been a topic of interest for many years now [1] [2]. They are employed to identify long FIR systems as they provide a reduced complexity solution for high–order problems and in this way outperform the standard fullband adaptive approaches.

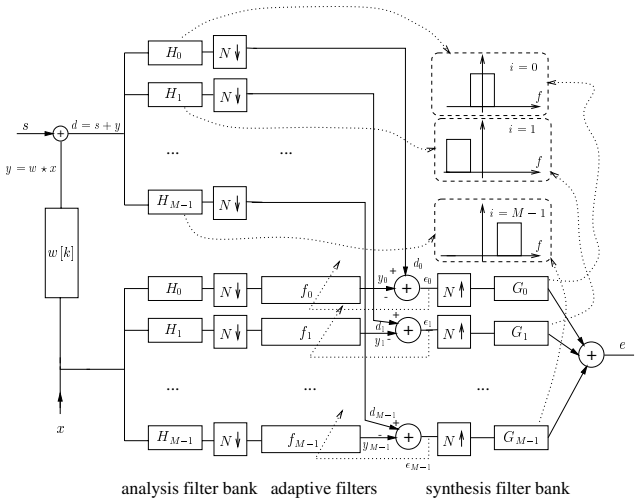

Figure 1: General subband adaptive filter with ideal filter banks

2.1. General subband adaptive filtering setup

A general subband adaptive filtering system is shown in figure 1. Both input signals x and d are fed into identical M–band analysis filter banks, with d being a filtered version of x by the unknown system $w[k]$. In most applications a so–called near–end signal s is added to $w \star x$ such that $d = s + w \star x$. The ultimate goal is to suppress $w \star x$ at the output e and to retain a non–distorted version of s.
After N–fold subsampling, adaptive filtering is done in each subband separately. Basically any kind of adaptation algorithm can be employed for the update. It is however common to use (N)LMS to adapt the subband filters $f_m[k]$. Remark that in contrast to classical adaptive filtering structures, in this setup $w[k]$ is estimated using a set of parallel, independently adapted filters $f_m[k]$.
The outputs of the subband adaptive filters are recombined in the synthesis filter bank leading to the final output e. The ideal frequency amplitude characteristics of the analysis filters $H_m(z)$ and synthesis filters $G_m(z)$ are also shown (ideal bandpass filters).

2.2. Subband versus fullband adaptive filtering

By splitting signals into subbands and using subsampling techniques faster (initial) convergence and better tracking properties

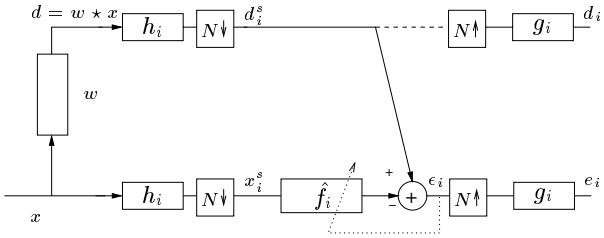

Figure 2: Adaptive filtering in subbands : lifting out one band.

are hoped for. Subband processing seems very promising since for colored input signals with a large eigenvalue spread such as speech, fullband adaptation algorithms like the LMS algorithm show slow convergence. In the subband case the subband signals will have a flatter frequency amplitude spectrum. The stepsizes of the subband adaptive filters can then be fine–tuned per subband, in general leading to improved convergence behavior.
A second advantage of subband systems over classical fullband adaptation is the lower implementation cost thanks to the downsampling. Optimal computational savings are expected whenever the signals are maximally (critically) downsampled, i.e. when $M = N$.
Unfortunately, this picture of the subband approach is certainly too optimistic. First, the achievable cost reduction w.r.t. fullband adaptive filtering is typically less than expected. Further, various effects occur, which affect the performance. A reduced modelling capability is observed through the appearance of residual errors and convergence is typically slowed down by inter–subband aliasing.

3. SUBBAND ADAPTIVE FILTER LENGTH

At first sight one could suggest to choose the subband filter lengths equal to $L_{SB} = \frac{L_{FB}}{N}$, where N is the downsampling factor. As the adaptive computations as well as the filter bank convolutions can be done at the reduced sampling rate, the subband approach is supposed to give a better performance at a lower cost. It appears however that with $\frac{L_{FB}}{N}$–length subband filters the performance is typically unsatisfactory.
Consider figure 1 and lift out one subband, as shown in figure 2. Assume now that the unknown system can be modelled as an L_{FB}–taps FIR filter $w[k]$. This implies that samples of input x are correlated with samples of d within a time horizon of $\frac{L_{FB}}{f_s}$ if x is white, with f_s being the sampling rate corresponding to x. As $w[k]$ is a finite–length FIR system no correlation is supposed to exist between x and d beyond this horizon.
One could expect that during the (ideal) bandpass filtering and N–fold downsampling the time horizon over which x_i^s and d_i^s are correlated would stay unchanged. As the sampling rate has been reduced with a factor N, the expected equivalent subband filter length L_{SB} would then be $\frac{L_{FB}}{N}$.
It appears that this reasoning, which is based on physical relations between x and d, is somewhat imprecise. The downsampling operation implies a kind of interpolation resulting in a much larger correlation time. It appears that L_{SB} should be taken significantly larger than $\frac{L_{FB}}{N}$ in order to obtain a satisfactory error suppression.

Theorem 1 : In the case of an M–band, N–fold downsampled ideally frequency selective DFT modulated filter bank the i–th subband adaptive filter $\hat{f}_i[k]$ in a setup as in figure 2 converges to

$$f_i[k] = \left(w[m] \star \left(e^{-j\frac{2\pi im}{M}} \text{sinc}(\frac{\pi m}{N})\right)\right)_{N\downarrow}, \qquad (1)$$

i.e., $f_i[k]$ can be obtained by downsampling the convolution of the impulse response of the unknown system $w[k]$ and a modulated double–sided sinc.

Proof : The proof is given in [3].

The sinc spreads out the impulse response in both directions of the time axis. Even when $w[k]$ is an FIR filter, $f_i[k]$ in general is not FIR. The adaptive identification process therefore has to track (many) more than $\frac{L_{FB}}{N}$ samples and due to the spreading–out in both directions of the time axis, an extra delay has to be inserted in the upper signal path. Neglecting the extra delay and the additional subband filter taps strongly limits the convergence of the adaptive filters and leads to a residual undermodelling error. Extending the adaptive filtering horizon in negative time direction seems most effective in reducing the residual error if acoustic impulse responses are involved. Remark that the spreading–out of $f_i[k]$ in the anti–causal direction is caused by the downsampling and not by the fact that ideal, hence infinite–order, anti–causal filter banks are applied.

4. INTRODUCING ANTI–CAUSAL FILTER TAPS

In this section two design rules are presented to determine the number of extra subband filter taps that are needed to reduce the residual error. It was shown in the previous section that in acoustic signal enhancement applications the spreading–out effect is most clearly present in the anti–causal direction. Hence, we will concentrate on the negative time axis. The results are readily applicable to the causal direction as well.
It is observed from Eq. 1 that $f_i[k]$ is infinitely long. In practice the adaptive filter $\hat{f}_i[k]$ (see figure 2) has finite length and hence is an approximation of $f_i[k]$. Some of the coefficients of $f_i[k]$ will not be modelled, resulting in a residual error. Evidently, the more coefficients are modelled, the lower the residual error.
It is clear that in practice a certain residual error will always remain, whatever the number of extra added filter taps may be. It should be noted however that for many applications this is not necessarily a big issue. In the case of acoustic echo cancellation for instance the echo suppression is typically limited to 25 or 30 dB in practice due to non–linearities in the signal path, time variations of the acoustic transfer function and misdetection in the adaptation control algorithm. If the error due to the residual undermodelling then has the same order of magnitude as the errors mentioned before no significant performance loss is expected w.r.t. standard fullband adaptive filtering structures.
In a straightforward implementation $\hat{f}_i[k]$ would be an $\frac{L_{FB}}{N}$–taps filter for which $\hat{f}_i[k] = 0$ for $k < 0$ and $k \geqslant \frac{L_{FB}}{N}$. In the previous section it was argued that some causal and anti–causal taps should be added. In the sequel L_{ac} refers to the number of anti–causal taps and L_c represents the extra taps added in the causal direction. The subband adaptive filter then has $\frac{L_{FB}}{N}$ main coefficients, complemented with L_{ac} anti–causal taps and L_c extra coefficients to compensate for the spreading–out in the causal direction. Therefore,

$$L_{SB} = \frac{L_{FB}}{N} + L_{ac} + L_c. \qquad (2)$$

4.1. Threshold–based method

From Eq. 1 it follows that if $w[m] = \delta[m]$, i.e. if there is a Dirac impulse at the time origin,

$$|f_i[k]| = |\mathrm{sinc}(\pi k)| \leqslant \frac{1}{\pi|k|}. \tag{3}$$

It is observed that for all unmodelled coefficients on the negative time axis

$$|f_i[k]| < \frac{1}{\pi L_{ac}}, \qquad \text{if } -\infty < k < -L_{ac}, \quad k \in \mathbb{Z}. \tag{4}$$

Hence, if a threshold τ is defined the following design rule

$$L_{ac} \geqslant \frac{1}{\pi\tau} \tag{5}$$

determines the number of anti–causal taps that are needed such that all neglected coefficients fall below the threshold.
It is observed from Eq. 5 that L_{ac} is a function of the desired threshold τ and that L_{ac} is not depending on M or N, i.e. independently of the downsampling factor a fixed number of coefficients are needed to reduce the residual error. Remark that L_{ac} extra filter taps correspond to a delay of $L_{ac}\frac{f_s}{N}$, which does depend on N.
From a complexity point of view L_{ac} should not be considered as such, but must be compared with the total filter length L_{SB}. As $\frac{L_{FB}}{N}$ is inversely proportional to N equation 2 shows that $L_{ac} \approx L_{SB} \gg \frac{L_{FB}}{N}$ for large values of N. As a consequence, the complexity gain of the subband adaptive filter w.r.t. the LMS algorithm will be smaller than expected for "large" values of N. On the other hand, for large values of N the filter banks tend to dominate the cost such that the effect of L_{ac} is somewhat masked.

4.2. Residual error–based method

Instead of thresholding the amplitude of the unmodelled coefficients as in equation 5 it is better to concentrate on the residual error to find an appropriate value for L_{ac}.
Consider a general fullband adaptive filtering setup. Define $L_w \times 1$ vectors $\mathbf{x}$ and $\mathbf{w}$ containing the input samples x and the coefficients of the unknown system w respectively, and an $L_{\hat{w}} \times 1$ vector $\hat{\mathbf{w}}$ representing the adaptive filter. If $L_{\hat{w}} \leqslant L_w$, $\hat{\mathbf{w}}$ is an approximation of $\mathbf{w}$ modelling only a part of the unknown system. For this setup

$$\begin{aligned} e[k] &= d[k] - y[k] && (6)\\ &= \mathbf{w}^H\mathbf{x} - (\boldsymbol{\Xi}\hat{\mathbf{w}})^H\mathbf{x}, && (7)\end{aligned}$$

with $\boldsymbol{\Xi}$ an $L_w \times L_{\hat{w}}$ matrix containing ones and zeros indicating which coefficients of $\mathbf{w}$ are modelled. For instance, if the coefficients $\mathbf{w}(L_0)$ till $\mathbf{w}(L_0 + L_{\hat{w}} - 1)$ are modelled, take

$$\boldsymbol{\Xi} = \begin{bmatrix} \mathbf{0}_{L_0 \times L_{\hat{w}}} \\ \mathbf{I}_{L_{\hat{w}}} \\ \mathbf{0}_{(L_w - L_0 - L_{\hat{w}}) \times L_{\hat{w}}} \end{bmatrix}. \tag{8}$$

Theorem 2 : Under these assumptions the expected minimum residual error is given by

$$\min_{\hat{\mathbf{w}}} E_e = E_d - \mathbf{w}^H\mathbf{R}_{xx}\boldsymbol{\Xi}\left(\boldsymbol{\Xi}^T\mathbf{R}_{xx}\boldsymbol{\Xi}\right)^{-1}\boldsymbol{\Xi}^T\mathbf{R}_{xx}\mathbf{w}, \tag{9}$$

in which $E_e = \mathcal{E}\{|e[k]|^2\}$, $E_d = \mathcal{E}\{|d[k]|^2\} = \mathbf{w}^H\mathbf{R}_{xx}\mathbf{w}$ and $\mathbf{R}_{xx} = \mathcal{E}\{\mathbf{x}\mathbf{x}^H\}$.

Proof : The proof is given in [4].

From theorem 2 it follows also that the maximum residual error suppression is given by

$$\max_{\hat{\mathbf{w}}} \frac{E_d}{E_e} = \frac{\mathbf{w}^H\mathbf{R}_{xx}\mathbf{w}}{\mathbf{w}^H\mathbf{R}_{xx}\mathbf{w} - \mathbf{w}^H\mathbf{R}_{xx}\boldsymbol{\Xi}\left(\boldsymbol{\Xi}^T\mathbf{R}_{xx}\boldsymbol{\Xi}\right)^{-1}\boldsymbol{\Xi}^T\mathbf{R}_{xx}\mathbf{w}}. \tag{10}$$

Formula 10 can now be applied to figure 2 to estimate the maximum subband error suppression

$$\mu_{\epsilon_i} = \max_{\hat{\mathbf{w}}} \frac{\mathcal{E}\{|d_i^s|^2\}}{\mathcal{E}\{|\epsilon_i|^2\}} = \frac{\mathcal{E}\{|d_i^s|^2\}}{\mathcal{E}\{|\epsilon_i|^2\}_{\min}}. \tag{11}$$

$\mathbf{w}$ in Eq. 10 corresponds to $f_i[k]$, as obtained from Eq. 1 and $\hat{\mathbf{w}}$ matches the $L_{SB} \times 1$ vector $\hat{f}_i[k]$. In theory $\mathbf{w}$ is infinitely long, in practice however we will consider an $L_w \times 1$ vector $\mathbf{w}$ containing only the central part of $f_i[k]$, with L_w being significantly larger than L_{SB}. Matrix $\boldsymbol{\Xi}$ indicates which coefficients of $f_i[k]$ will be modelled. Given the numbers L_{SB}, L_{ac} and L_c matrix $\boldsymbol{\Xi}$ can be constructed as in Eq. 8. Further, $\mathbf{R}_{xx}$ is the autocorrelation matrix corresponding to x_i^s. Hence, $\mathbf{R}_{xx}$ depends on the intrinsic coloring of the fullband input x and on the frequency characteristic of the i–th analysis filter, and is affected by the downsampling operation. If x can be written as $c \star n$, with n a stationary white noise source and c a coloring filter, the coloring of x_i^s is approximately given by $\kappa = (c \star h_i)_{N\downarrow}$. It is explained in more detail in [4] how $\mathbf{R}_{xx}$ can be computed once the coloring filter κ is known.
Hence, applying the preceding procedure to each subband i of the general subband adaptive scheme (see figure 1), a set of M values μ_{ϵ_i} can be obtained. It is observed from figure 2 that the optimal suppression of the upsampled and filtered error e_i

$$\mu_{e_i} = \frac{\mathcal{E}\{|d_i|^2\}}{\mathcal{E}\{|e_i|^2\}_{\min}} \approx \mu_{\epsilon_i}. \tag{12}$$

From figure 1 and 2 it follows that

$$e = \sum_{m=0}^{M-1} e_m \tag{13}$$

and hence

$$\mathcal{E}\{|e|^2\} = \mathcal{E}\left\{\left|\sum_{m=0}^{M-1} e_m\right|^2\right\} \approx \sum_{m=0}^{M-1}\mathcal{E}\{|e_m|^2\}. \tag{14}$$

The approximation will be exact if the signals e_m are uncorrelated. However, $\mathcal{E}\{e_m^* e_n\} \neq 0$ for $m \neq n$ because of the overlapping of the different subbands.
From Eq. 14 it follows that the global residual error suppression can be approximated by

$$\mu_e = \max_{\{\hat{f}_0,\ldots,\hat{f}_{M-1}\}} \frac{\mathcal{E}\{|d[k]|^2\}}{\mathcal{E}\{|e[k]|^2\}} \approx \frac{\sum_{m=0}^{M-1}\mathcal{E}\{|d_m^s|^2\}}{\sum_{m=0}^{M-1}\mathcal{E}\{|\epsilon_m|^2\}_{\min}}. \tag{15}$$

From Eq. 10 the (subband dependent) parameters L_{ac}, L_c and L_{SB} can now be computed such that μ_{ϵ_i} or μ_e is as desired.

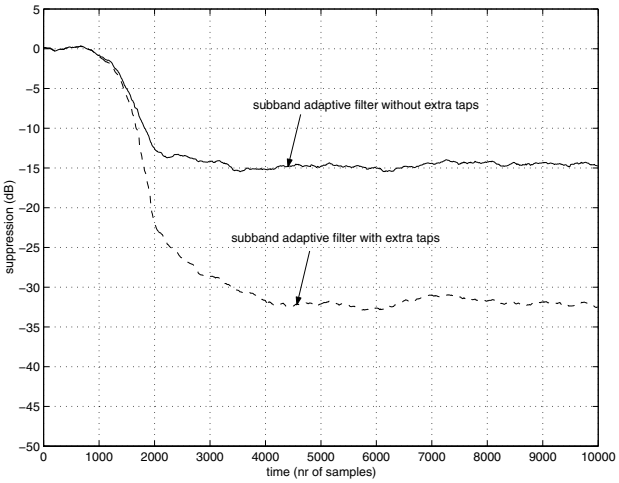

Figure 3: Convergence curves of 2 different adaptive systems. The FIR system to be identified is of order 31.

Although the maximum subband error suppression μ_{ϵ_i} to which the subband adaptive filters converge can be estimated fairly well using this method the estimate of the global measure μ_e is less accurate.

5. EXPERIMENT

A randomly generated FIR system of order 31 was identified using a white noise input. Two adaptive algorithms are compared :

a) a 10–band, 8–fold downsampled perfect reconstruction subband adaptive system (see figure 1) was designed with subband adaptive filters having length $\frac{L_{FB}}{N} = 4$ and $L_{ac} = L_c = 0$. The subband filters were adapted with the NLMS algorithm. Both the analysis and the synthesis filters are FIR, DFT modulated and are of order 223. From figure 3 it is clear that for the subband adaptive filter without extra taps ($L_{ac} = L_c = 0$) a considerable undermodelling error remains.
Formula 10 was applied to each subband. It appeared that at the end of the simulation for each subband the error suppression was less than 1 dB below the optimum μ_{ϵ_i}. The global residual error suppression was estimated using Eq. 15 and appeared to be 13.4 dB, which is a fair approximation of the suppression observed from figure 3.

b) To the same subband system then extra causal and anti–causal filter taps were added to allow a better modelling. From Eq. 5 it is observed that two anti–causal taps ($L_{ac} = 2$) corresponds to a threshold $\tau = -16$ dB. Hence, 2 anti–causal taps were added per filter and there were a total of 10 filter taps per subband ($L_{ac} = 2, L_c = 4$), increasing the number of modelling parameters from 40 to 100. It can be observed from figure 3 that the steady–state undermodelling error is strongly reduced.
Also for this second adaptive filter the global residual error suppression was computed using Eq. 15. It was found that $\mu_e = 28.8$ dB , which apparently is a less accurate estimate (being about -32 dB in figure 3).

Note that the unknown system was randomly generated. As a consequence, adding extra taps in the causal direction seems to be as effective as providing anti–causal filter taps. Furthermore, the error suppression obtained from the first simulation is rather limited. If acoustic impulse responses are involved typically more error suppression is obtained, even for $L_{ac} = L_c = 0$, and extending the adaptive filter to the negative time axis appears to be most effective. Further, the adaptation stepsizes were not optimized to obtain the fastest convergence, so no conclusions should be made about the relative convergence speed of the different adaptive filters based on figure 3.

6. CONCLUSIONS

It was shown that infinite length adaptive filters are needed to completely model an unknown finite order system with a standard subband adaptive filtering setup. Therefore, (many) more than $\frac{L_{FB}}{N}$ samples have to be tracked and as the infinite length subband adaptive filters span both the positive and the negative time axis, an extra delay has to be inserted in the so–called desired signal path. Neglecting the extra delay and taking the filter lengths equal to $\frac{L_{FB}}{N}$ strongly limits the convergence of the adaptive filters and leads to a residual undermodelling error. Further, two design rules were presented to determine the number of extra subband filter taps that are needed to sufficiently reduce the residual error. Although the maximum subband error suppression to which the subband adaptive filters converge can be estimated fairly well, the estimate for the global error is less accurate.

7. ACKNOWLEDGMENTS

This research work was carried out at the ESAT laboratory of the Katholieke Universiteit Leuven, in the frame of the Concerted Research Action GOA–MEFISTO–666 of the Flemish Government and was partly funded by IWT project MUSETTE ('Multimicrophone Signal Enhancement Techniques for handsfree telephony and voice controlled systems'). The scientific responsibility is assumed by its authors.

8. REFERENCES

[1] A. Gilloire and M. Vetterli, "Adaptive Filtering in Subbands with Critical Sampling : Analysis, Experiments and Application to Acoustic Echo Cancellation," *IEEE Transactions on Signal Processing*, vol. 40, no. 8, pp. 1862–1875, August 1992.

[2] W. Kellermann, "Analysis and Design of Multirate Systems for Cancellation of Acoustical Echoes," in *Proceedings of the 1988 IEEE International Conference on Acoustics, Speech and Signal Processing (ICASSP88)*, New York, New York, April 1988, pp. 2570–2573.

[3] K. Eneman and M. Moonen, "On the Length of Subband Adaptive Filters," Tech. Rep. 00–2, ESAT–SISTA, Katholieke Universiteit Leuven, Belgium, January 2000.

[4] K. Eneman, *Subband and Frequency–Domain Adaptive Filtering Techniques for Speech Enhancement in Hands–free Communication*, Ph.D. thesis, Katholieke Universiteit Leuven, Heverlee, Belgium, March 2002.