Time-Varying FIR Equalization for MIMO Transmission over Doubly Selective Channels

Imad Barhumi
College of Eng.-EE Department, UAE University
P.O.Box 17555, Al-Ain, UAE
Email: imad.barhumi@uaeu.ac.ae

Marc Moonen
ESAT-SCD, KU Leuven
Kasteelpark Arenberg 10, 3001 Leuven-Belgium
Email: marc.moonen@esat.kuleuven.be

***Abstract*—In this paper we propose time-varying FIR equalization techniques for multiple-input multiple-output (MIMO) transmission over doubly selective channels. The doubly selective channel is modeled using the basis expansion model (BEM), and equalized by means of time-varying FIR filters. The time-varying FIR filters are also modeled using the BEM. By doing this, the time-varying deconvolution problem is converted into a two-dimensional time-invariant deconvolution problem in the time-invariant coefficients of the channel BEM and the time-invariant coefficients of the equalizer BEM. The time-varying FIR equalizers are derived based on the matched filtering criterion, as well as the minimum mean-squared error (MMSE) and the zero-forcing (ZF) criteria. The performance of the MMSE and ZF equalizers in the context of MIMO transmission is demonstrated by numerical simulations.**

I. Introduction

The wireless communication industry has experienced a rapid growth in recent years, and digital cellular systems are currently designed to provide high data rates at high terminal speeds. High data rates give rise to inter-symbol interference (ISI) due to the so-called multi-path fading. Such an ISI channel is called frequency-selective. On the other hand, due to terminal mobility and/or receiver frequency offset the received signal is subject to frequency shifts (Doppler shifts). The Doppler shift induces time-selectivity characteristics. The Doppler effect in conjunction with ISI give rise to the so-called doubly selective channel (frequency- and time-selective).

Equalizers can be classified according to their structure, namely as linear or decision feedback equalizers. Equalizers can also be classified according to the optimization criterion used for the computation of the equalizer coefficients. In this sense, equalizers can be classified as zero-forcing (ZF), when a zero-forcing solution is sought, or minimum mean-square error (MMSE), when the equalizer optimizes the mean-square error (MSE) of the symbol estimate, or maximum likelihood (ML), when the maximum likelihood sequence estimation criterion is utilized.

In the context of linear equalization of time-invariant channels, MMSE and ZF equalizers are investigated in [1], [2]. Decision feedback equalizers (DFE) which employ previously detected symbols to compensate for ISI are discussed in [3], [4]. Utilizing finite impulse response filters for DFEs is investigated in [5]. Maximum likelihood sequence estimation (MLSE) for data transmission over TI channels with ISI is introduced in [6], [7].

Adaptive techniques for channel estimation or equalization are developed to combat the problem of ISI over slowly time-varying channels. The adaptive algorithms range from the least mean-squares (LMS) algorithm [8], [9], [10], to the recursive least squares (RLS) algorithm or Kalman filtering algorithm [11], [12], [13], [14].

For fast flat-fading channels, polynomial fitting of the 1-tap time-varying channel is used to predict the channel as proposed in [15]. Extending polynomial fitting over the whole packet (or using a sliding window approach) to time-varying frequency-selective channels is investigated in [16]. A maximum likelihood sequence estimation based on the Viterbi algorithm (VA) is studied in [17], and in [18] for multi-path fading channels considering only the single-input single-output (SISO) case. However, the ML approach turns out to be very complex to implement.

In this paper, we extend the results of [19], where time-varying FIR equalization for single-input multiple-output (SIMO) transmission over doubly selective channels was assumed, to the case of MIMO transmission over doubly selective channels. In addition to the ZF and MMSE equalizers, the matched filter equalizer is also derived. For the MIMO transmission we consider a spatial multiplexing transmission technique. However, the results can be easily extended to the case of space-time coding.

This paper is organized as follows. In Section II, the system model is introduced. The time-varying FIR equalizer is developed in Section III. Our findings are confirmed by numerical simulations introduced in Section IV. Finally, our conclusions are drawn in Section V.

Notation: We use upper (lower) bold face letters to denote matrices (vectors). Superscripts ^{H}, ^{T}, and * represent Hermitian, transpose, and conjugate respectively. To simplify notations and save space, the double summation over the subscripts i and j is denoted as $\sum_{i,j}$, where the ranges of i and j should be clear from the context. We denote the $N \times N$ identity matrix as $\mathbf{I}_N$, the $M \times N$ all-zero matrix as $\mathbf{0}_{M\times N}$. Finally, $\mathrm{diag}\{\mathbf{x}\}$ denotes the diagonal matrix with vector $\mathbf{x}$ on its diagonal.

978-1-4244-2324-8/08/$25.00 © 2008 IEEE.

This full text paper was peer reviewed at the direction of IEEE Communications Society subject matter experts for publication in the IEEE "GLOBECOM" 2008 proceedings.

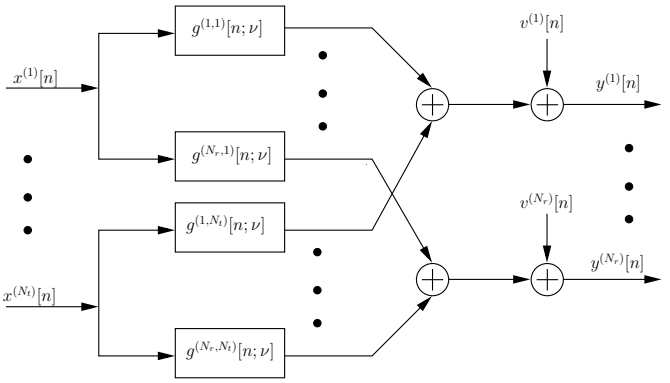

Fig. 1. System Model for MIMO Transmission over Doubly Selective Channels

II. System Model

We consider a multiple-input multiple-output (MIMO) system with N_t transmit antennas and N_r receive antennas. The system under consideration is depicted in Figure 1. The input data stream is spatially multiplexed across the N_t transmit antennas, and transmitted over the time-varying multi-path fading channel at a rate of $1/T$ symbols/s. The time-varying channel characterizing the link between the tth transmit antenna and the rth receive antenna at time-index n is denoted as $g^{(r,t)}[n;\nu]$. The base-band description of the received symbol at the rth receive antenna at time-index n, $y^{(r)}[n]$ is obtained as

$$y^{(r)}[n] = \sum_{t=1}^{N_t} \sum_{\nu=0}^{\infty} g^{(r,t)}[n;\nu] x^{(t)}[n-\nu] + v^{(r)}[n], \quad (1)$$

where $x^{(t)}[n]$ is the QAM symbol transmitted from the tth transmit at time-index n, and $v^{(r)}[n]$ is the additive noise at the rth receive antenna at time-index n. We will use the BEM to approximate the doubly selective channel $g^{(r,t)}[n;\nu]$ for $n \in \{0,\ldots,N+L'-1\}$ (L' will be the time-varying equalizer order). In this model, the channel is specified as a time-varying FIR filter of order $L = \lfloor \tau_{\max}/T \rfloor + 1$, with $\tau_{\max}$ is the maximum delay spread of the physical channel, and each tap is expressed as a superposition of time varying complex exponential basis functions with frequencies on the DFT grid. The lth tap of the time-varying FIR channel between the tth transmit antenna and the rth receive antenna at time-index n is expressed as

$$h^{(r,t)}[n;l] = \sum_{q=-Q/2}^{Q/2} h_{q,l}^{(r,t)} e^{j2\pi qn/K}, \quad (2)$$

where Q is the number of time-varying basis functions satisfying $Q/(2KT) \geq f_{max}$, with f_{max} is the channel maximum Doppler spread, and K is the BEM resolution. The coefficients $h_{q,l}^{(r,t)}$ are kept invariant over a block of $N+L'$ symbols. Substituting th BEM channel model in (1), we obtain

$$y^{(r)}[n] = \sum_{t=1}^{N_t} \sum_{q=-Q/2}^{Q/2} \sum_{l=0}^{L} e^{j2\pi qn/K} h_{q,l}^{(r,t)} x^{(t)}[n-l] + v^{(r)}[n]. \quad (3)$$

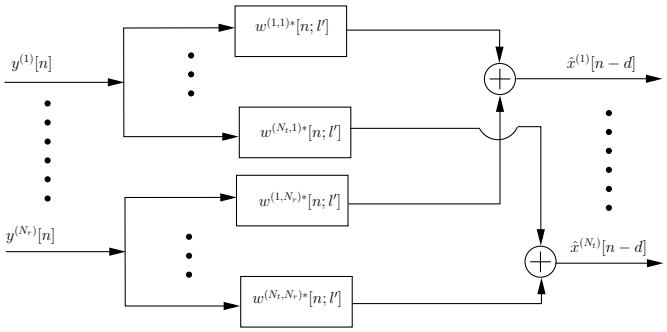

Fig. 2. Time-Varying FIR Equalization for MIMO Transmission over Doubly Selective Channels

On a block level formulation the received block of length $N+L'$ at the rth receive antenna can be written as

$$\mathbf{y}^{(r)} = \sum_{t=1}^{N_t} \sum_{q=-Q/2}^{Q/2} \sum_{l=0}^{L} h_{q,l}^{(r,t)} \mathbf{D}_q \mathbf{Z}_l \mathbf{x}^{(t)} + \mathbf{v}^{(r)}, \quad (4)$$

where $\mathbf{y}^{(r)} = [y^{(r)}[-L'],\ldots,y^{(r)}[N-1]]^T$, $\mathbf{x}^{(t)} = [x^{(t)}[-L-L'],\ldots,x^{(t)}[N-1]]^T$, and $\mathbf{v}^{(r)}$ is similarly defined as $\mathbf{y}^{(r)}$. The diagonal matrix $\mathbf{D}_q$ representing the qth basis function is defined as $\mathbf{D}_q = \text{diag}\{[1,\ldots,e^{j2\pi q(N+L'-1)/K}]^T\}$, and the $(N+L') \times (N+L'+L)$ Toeplitz matrix $\mathbf{Z}_l$ is defined as $\mathbf{Z}_l = [\mathbf{0}_{N+L'\times(L-l)}, \mathbf{I}_{N+L'}, \mathbf{0}_{(N+L')\times l}]$.

III. Time-Varying FIR Equalization

At the receiver side, a bank of N_t time-varying FIR equalizers are applied at each receive antennas. The output of the corresponding filters are combined to to recover the transmitted symbols on the different transmit antennas. In this sense, the time-varying FIR equalizers $w^{(a,r)}[n;l']$ for $r = 1,\ldots,N_r$ are each designed to have order L', and are applied at the receive antennas to recover the transmitted symbols at the ath transmit antenna for $a = 1,\ldots,N_t$. This equalization model is shown in Figure 2. Hence, an estimate of the transmitted symbol on the ath transmit antenna at time-index n subject to some decision delay d is obtained as

$$\hat{x}^{(a)}[n-d] = \sum_{r=1}^{N_r} \sum_{l'=0}^{L'} w^{(a,r)*}[n;l'] y^{(r)}[n-l']. \quad (5)$$

As the channel was approximated using the BEM, it is also convenient to use the BEM to model the time-varying FIR equalizers. In this sense, the time variation of each tap of the time-varying FIR equalizers is then modeled as a superposition of $Q'+1$ complex exponential basis functions with frequencies on the same DFT grid as of the BEM of the time-varying FIR channel. Therefore, the l'th tap of the time-varying FIR equalizer corresponding to the ath transmit antenna and rth receive antenna $w^{(a,r)}[n;l']$ is modeled at time-index $n \in \{0,\ldots,N-1\}$ as

$$w^{(a,r)}[n;l'] = \sum_{q'=-Q'/2}^{Q'/2} w_{q',l'}^{(a,r)} e^{-j2\pi q'n/K}. \quad (6)$$

978-1-4244-2324-8/08/$25.00 © 2008 IEEE.

This full text paper was peer reviewed at the direction of IEEE Communications Society subject matter experts for publication in the IEEE "GLOBECOM" 2008 proceedings.

Substituting (6) in (5), an estimate of the symbol transmitted at the ath transmit antenna at time-index n subject to the decision delay d can then be obtained as

$$\hat{x}^{(a)}[n-d] = \sum_{r=1}^{N_r} \sum_{q'=-Q'/2}^{Q'/2} \sum_{l'=0}^{L'} e^{j2\pi q' n/K} w_{q',l'}^{(a,r)*} y^{(r)}[n-l']. \tag{7}$$

With a block level formulation, (7) can be written as

$$\hat{\mathbf{x}}^{(a)} = \sum_{r=1}^{N_r} \sum_{q',l'} w_{q',l'}^{(a,r)*} \bar{\mathbf{D}}_{q'} \bar{\mathbf{Z}}_{l'} \mathbf{y}^{(r)}, \tag{8}$$

where the vector of the estimated symbols $\hat{\mathbf{x}}^{(a)} = [\hat{x}^{(a)}[-d], \ldots, \hat{x}^{(a)}[N-d+1]]^T$, the $N \times N$ diagonal matrix $\bar{\mathbf{D}}_{q'} = \mathrm{diag}\{[1, \ldots, e^{j2\pi q'(N-1)/K}]^T\}$, and the $N \times N + L'$ Toeplitz matrix $\bar{\mathbf{Z}}_{l'} = [\mathbf{0}_{N\times(L'-l')}, \mathbf{I}_N, \mathbf{0}_{N\times l'}]$. Substituting (4) in (8), we obtain

$$\begin{aligned}\hat{\mathbf{x}}^{(a)} =& \sum_{r=1}^{N_r} \sum_{t=1}^{N_t} \sum_{q',l'} \sum_{q,l} w_{q',l'}^{(a,r)*} h_{q,l}^{(r,t)} \bar{\mathbf{D}}_{q'} \bar{\mathbf{Z}}_{l'} \mathbf{D}_q \mathbf{Z}_l \mathbf{x}^{(t)} \\ &+ \sum_{r=1}^{N_r} \sum_{q',l'} w_{q',l'}^{(a,r)*} \bar{\mathbf{D}}_{q'} \bar{\mathbf{Z}}_{l'} \mathbf{v}^{(r)}. \end{aligned} \tag{9}$$

Using the property $\bar{\mathbf{Z}}_{l'} \mathbf{D}_q = e^{j2\pi q(L'-l')/K} \bar{\mathbf{D}}_q \bar{\mathbf{Z}}_{l'}$, the estimated block in (9) can then be written as

$$\begin{aligned}\hat{\mathbf{x}}^{(a)} =& \sum_{r=1}^{N_r} \sum_{t=1}^{N_t} \sum_{q',l'} \sum_{q,l} e^{j2\pi q(L'-l')/K} w_{q',l'}^{(a,r)*} h_{q,l}^{(r,t)} \bar{\mathbf{D}}_p \tilde{\mathbf{Z}}_k \mathbf{x}^{(t)} \\ &+ \sum_{r=1}^{N_r} \sum_{q',l'} w_{q',l'}^{(a,r)*} \bar{\mathbf{D}}_{q'} \bar{\mathbf{Z}}_{l'} \mathbf{v}^{(r)}, \end{aligned} \tag{10}$$

where $p = q + q'$, $k = l + l'$, and the $N \times (N + L + L')$ matrix $\tilde{\mathbf{Z}}_k = [\mathbf{0}_{N\times(L+L'-k)}, \mathbf{I}_N, \mathbf{0}_{N\times k}]$. Defining the two-dimensional (2-D) function $f_{p,k}^{(a,t)}$ as

$$f_{p,k}^{(a,t)} = \sum_{r=1}^{N_r} \sum_{q',l'} e^{j2\pi(p-q')(L'-l')/K} w_{q',l'}^{(a,r)*} h_{p-q',k-l'}^{(r,t)}, \tag{11}$$

we arrive at

$$\hat{\mathbf{x}}^{(a)} = \sum_{t=1}^{N_t} \sum_{p,k} f_{p,k}^{(a,t)} \bar{\mathbf{D}}_p \tilde{\mathbf{Z}}_k \mathbf{x}^{(t)} + \sum_{r=1}^{N_r} \sum_{q',l'} w_{q',l'}^{(a,r)*} \bar{\mathbf{D}}_{q'} \bar{\mathbf{Z}}_{l'} \mathbf{v}^{(r)}. \tag{12}$$

Note that, $f_{p,k}^{(a,t)}$ is a 2-D function representing a weighted 2-D convolution in the time-invariant BEM coefficients of the equalizer and the time-invariant BEM coefficients of the channel.

Define $\mathbf{f}^{(a,t)} = [f_{-(Q+Q')/2,0}^{(a,t)}, \ldots, f_{-(Q+Q')/2,L+L'}^{(a,t)}, \ldots, f_{(Q+Q')/2,L+L'}^{(a,t)}]^T$ and $\mathbf{f}^{(a)} = [\mathbf{f}^{(a,1)T}, \ldots, \mathbf{f}^{(a,N_t)T}]^T$, (12) can be finally written as

$$\hat{\mathbf{x}}^{(a)} = (\mathbf{f}^{(a)T} \otimes \mathbf{I}_N)(I_{N_t} \otimes \mathbf{A})\mathbf{x} + (\mathbf{w}^{(a)H} \otimes \mathbf{I}_N)(I_{N_r} \otimes \mathbf{B})\mathbf{v}, \tag{13}$$

where the data symbols vector $\mathbf{x} = [\mathbf{x}^{(1)T}, \ldots, \mathbf{x}^{(N_t)T}]^T$, the noise vector $\mathbf{v} = [\mathbf{v}^{(1)T}, \ldots, \mathbf{v}^{(N_r)T}]^T$, the matrices $\mathbf{A}$ and $\mathbf{B}$ are defined as

$$\mathbf{A} = \begin{bmatrix} \bar{\mathbf{D}}_{-(Q+Q')/2} \tilde{\mathbf{Z}}_0 \\ \vdots \\ \bar{\mathbf{D}}_{-(Q+Q')/2} \tilde{\mathbf{Z}}_{L+L'} \\ \vdots \\ \bar{\mathbf{D}}_{(Q+Q')/2} \tilde{\mathbf{Z}}_{L+L'} \end{bmatrix}, \quad \mathbf{B} = \begin{bmatrix} \bar{\mathbf{D}}_{-Q'/2} \bar{\mathbf{Z}}_0 \\ \vdots \\ \bar{\mathbf{D}}_{-Q'/2} \bar{\mathbf{Z}}_{L'} \\ \vdots \\ \bar{\mathbf{D}}_{Q'/2} \bar{\mathbf{Z}}_{L'} \end{bmatrix},$$

and the time-varying FIR equalizer BEM coefficients vector $\mathbf{w}^{(a)} = [\mathbf{w}^{(a,1)T}, \ldots, \mathbf{w}^{(a,N_r)T}]^T$ with $\mathbf{w}^{(a,r)} = [w_{-Q'/2,0}^{(a,r)}, \ldots, w_{-Q'/2,L'}^{(a,r)}, \ldots, w_{Q'/2,L'}^{(a,r)}]^T$. A relationship between $\mathbf{w}^{(a)}$ and $\mathbf{f}^{(a)}$ can be established in order to obtain the BEM coefficients of the time-varying FIR equalizers. In this sense, first define the $(L'+1) \times (L+L'+1)$ block Toeplitz matrix $\boldsymbol{\mathcal{H}}_q^{(r,t)}$ as

$$\boldsymbol{\mathcal{H}}_q^{(r,t)} = \begin{bmatrix} h_{q,0}^{(r,t)} & \ldots & h_{q,L}^{(r,t)} & & \mathbf{0} \\ & \ddots & & \ddots & \\ \mathbf{0} & & h_{q,0}^{(r,t)} & \ldots & h_{q,L}^{(r,t)} \end{bmatrix},$$

then define the $(Q'+1)(L'+1) \times (Q+Q'+1)(L+L'+1)$ block Toeplitz matrix

$$\boldsymbol{\mathcal{H}}^{(r,t)} = \begin{bmatrix} \boldsymbol{\Omega}_{-Q/2} \boldsymbol{\mathcal{H}}_{-Q/2}^{(r,t)} & \ldots & \boldsymbol{\Omega}_{Q/2} \boldsymbol{\mathcal{H}}_{Q/2}^{(r,t)} & & \\ & \ddots & & \ddots & \\ \mathbf{0} & & \boldsymbol{\Omega}_{-Q/2} \boldsymbol{\mathcal{H}}_{-Q/2}^{(r,t)} & \ldots & \boldsymbol{\Omega}_{Q/2} \boldsymbol{\mathcal{H}}_{Q/2}^{(r,t)} \end{bmatrix},$$

with $\boldsymbol{\Omega}_q = \mathrm{diag}\{[e^{j2\pi qL'/K}, \ldots, 1]^T\}$. Defining $\boldsymbol{\mathcal{H}}^{(t)} = [\boldsymbol{\mathcal{H}}^{(1,t)T}, \ldots, \boldsymbol{\mathcal{H}}^{(N_r,t)T}]^T$ and $\boldsymbol{\mathcal{H}} = [\boldsymbol{\mathcal{H}}^{(1)}, \ldots, \boldsymbol{\mathcal{H}}^{(N_t)}]$, we can derive from (11) that

$$\mathbf{f}^{(a)T} = \mathbf{w}^{(a)H} \boldsymbol{\mathcal{H}}. \tag{14}$$

A. Matched Filter Equalizer

In this subsection, the matched filter equalizer is derived. The matched filter equalizer maximizes the signal-to-noise ratio (SNR) at the output without necessarily canceling the inter-symbol interference. Hence, we can define the SNR at the output of the matched filter equalizer as

$$SNR_o = \frac{\mathcal{E}\{\mathbf{q}^H \mathbf{q}\}}{\mathcal{E}\{\mathbf{n}^H \mathbf{n}\}} = \frac{\mathcal{E}\{\mathrm{tr}\{\mathbf{q}\mathbf{q}^H\}\}}{\mathcal{E}\{\mathrm{tr}\{\mathbf{n}\mathbf{n}^H\}\}}, \tag{15}$$

where $\mathbf{q}$ and $\mathbf{n}$ are the first and second terms of (13) respectively. In this definition, $\mathbf{q}$ constitutes the information bearing part, while $\mathbf{n}$ constitutes the noise part. Let us now introduce the following properties:

$$\mathrm{tr}\{(\mathbf{a}^T \otimes \mathbf{I}_N)\mathbf{V}\} = \mathbf{a}^T \mathrm{subtr}\{\mathbf{V}\}, \tag{16}$$

$$\mathrm{tr}\{(\mathbf{a}^T \otimes \mathbf{I}_N)\mathbf{U}(\mathbf{a}^* \otimes \mathbf{I}_N)\} = \mathbf{a}^T \mathrm{subtr}\{\mathbf{U}\} \mathbf{a}^*, \tag{17}$$

for an arbitrary $k \times 1$ vector $\mathbf{a}$, arbitrary $kN \times N$ matrix $\mathbf{V}$, and arbitrary $kN \times kN$ matrix $\mathbf{U}$. The operator $\mathrm{subtr}\{\cdot\}$ splits

This full text paper was peer reviewed at the direction of IEEE Communications Society subject matter experts for publication in the IEEE "GLOBECOM" 2008 proceedings.

the matrix into $N \times N$ sub-matrices and replaces each sub-matrix by its trace[1]. Hence, $\text{subtr}\{\cdot\}$ reduces the row and column dimensionality by a factor N. Therefore, the SNR at the matched filter equalizer output can be written as

$$SNR_o = \frac{\mathbf{w}^{(a)H}\boldsymbol{\mathcal{H}}\mathbf{R}_A\boldsymbol{\mathcal{H}}^H\mathbf{w}^{(a)}}{\mathbf{w}^{(a)H}\mathbf{R}_B\mathbf{w}^{(a)}}, \tag{18}$$

where $\mathbf{R}_A = \text{subtr}\left\{(\mathbf{I}_{N_t} \otimes \mathbf{A})\,\mathbf{R}_x\,(\mathbf{I}_{N_t} \otimes \mathbf{A}^H)\right\}$, and $\mathbf{R}_B = \text{subtr}\left\{(\mathbf{I}_{N_r} \otimes \mathbf{B})\,\mathbf{R}_v\,(\mathbf{I}_{N_r} \otimes \mathbf{B}^H)\right\}$, with $\mathbf{R}_x$ and $\mathbf{R}_v$ are the source and noise covariance matrices $\mathbf{R}_x = \mathcal{E}\{\mathbf{x}\mathbf{x}^H\}$ respectively $\mathbf{R}_v = \mathcal{E}\{\mathbf{v}\mathbf{v}^H\}$.

Without loss of generality, the matched filter equalizer $\mathbf{w}^{(a)}$ can be forced to have unit energy, that is $\mathbf{w}^{(a)H}\mathbf{R}_B\mathbf{w}^{(a)} = 1$. With this constraint, the matched filter equalizer is obtained by solving the following constrained optimization problem

$$\arg\max_{\mathbf{w}^{(a)}} \frac{\mathbf{w}^{(a)H}\boldsymbol{\mathcal{H}}\mathbf{R}_A\boldsymbol{\mathcal{H}}^H\mathbf{w}^{(a)}}{\mathbf{w}^{(a)H}\mathbf{R}_B\mathbf{w}^{(a)}}, \quad \text{s.t.} \quad \mathbf{w}^{(a)H}\mathbf{R}_B\mathbf{w}^{(a)} = 1, \tag{19}$$

The problem in (19) is a generalized eigenvalue problem, and so the matched filter equalizer coefficients are obtained as

$$\mathbf{w}_{MF}^{(a)} = \text{eig}_{\max}\left(\mathbf{R}_B^{-1}\boldsymbol{\mathcal{H}}\mathbf{R}_A\boldsymbol{\mathcal{H}}^H\right), \tag{20}$$

where $\text{eig}_{\max}(\mathbf{A})$ is the eigenvector that corresponds to the maximum eigenvalue of the matrix $\mathbf{A}$.

For a white input source ($\mathbf{R}_x = \sigma_s^2\mathbf{I}$), and white additive noise ($\mathbf{R}_v = \sigma_n^2\mathbf{I}$), and for a BEM resolution $K = N$, the SNR at the output of the matched filter equalizer is given as

$$SNR_o = \frac{\mathbf{w}^{(a)H}\boldsymbol{\mathcal{H}}\boldsymbol{\mathcal{H}}^H\mathbf{w}^{(a)}}{\mathbf{w}^{(a)H}\mathbf{w}^{(a)}}\frac{\sigma_s^2}{\sigma_n^2}, \tag{21}$$

In this case we can force the matched filter equalizer $\mathbf{w}^{(a)}$ to have a unit norm, that is $\mathbf{w}^{(a)H}\mathbf{w}^{(a)} = 1$. With this constraint the matched filter equalizer can be obtained by solving the following constrained optimization problem

$$\arg\max_{\mathbf{w}^{(a)}} \frac{\mathbf{w}^{(a)H}\boldsymbol{\mathcal{H}}\boldsymbol{\mathcal{H}}^H\mathbf{w}^{(a)}}{\mathbf{w}^{(a)H}\mathbf{w}^{(a)}}, \quad \text{s.t.} \quad \mathbf{w}^{(a)H}\mathbf{w}^{(a)} = 1, \tag{22}$$

which is an eigenvalue problem, with the solution obtained as

$$\mathbf{w}_{MF}^{(a)} = \text{eig}_{\max}\{\boldsymbol{\mathcal{H}}\boldsymbol{\mathcal{H}}^H\} \tag{23}$$

B. MMSE and ZF Equalizers

The MMSE equalizer is obtained by solving the following minimization problem

$$\arg\min_{\mathbf{w}^{(a)}} \mathcal{E}\{||\hat{\mathbf{x}}^{(a)} - \tilde{\mathbf{Z}}_d\mathbf{x}^{(a)}||^2\}, \tag{24}$$

where the multiplication with $\tilde{\mathbf{Z}}_d$ accounts for the system decision delay. The minimization of (24) can be equivalently written as

$$\arg\min_{\mathbf{w}^{(a)}} \quad \mathbf{w}^{(a)H}(\boldsymbol{\mathcal{H}}\mathbf{R}_A\boldsymbol{\mathcal{H}}^H + \mathbf{R}_B)\mathbf{w}^{(a)} - 2\Re\{\mathbf{w}^{(a)H}\boldsymbol{\mathcal{H}}\mathbf{r}_A^{(a)}\} + \text{tr}\{\tilde{\mathbf{Z}}_d\mathbf{R}_x\tilde{\mathbf{Z}}_d^T\}, \tag{25}$$

where $\mathbf{r}_A^{(a)} = \text{subtr}\left\{(\mathbf{I}_{N_t} \otimes \mathbf{A})\mathcal{E}\{\mathbf{x}\mathbf{x}^{(a)H}\}\tilde{\mathbf{Z}}_d^T\right\}$. Assuming the source signals on the different transmit antennas are independent and identically distributed (i.i.d) random variables, then $\mathbf{r}_A^{(a)} = \text{subtr}\left\{(\mathbf{I}_{N_t} \otimes \mathbf{A})\mathbf{R}_x(\mathbf{e}_a^T \otimes \mathbf{I}_N)\tilde{\mathbf{Z}}_d^T\right\}$. Solving for $\mathbf{w}^{(a)}$ in (25), we obtain

$$\mathbf{w}_{MMSE}^{(a)} = (\mathbf{R}_B + \boldsymbol{\mathcal{H}}\mathbf{R}_A\boldsymbol{\mathcal{H}}^H)^{-1}\boldsymbol{\mathcal{H}}\mathbf{r}_A^{(a)} \tag{26}$$

$$= \mathbf{R}_B^{-1}\boldsymbol{\mathcal{H}}(\boldsymbol{\mathcal{H}}^H\mathbf{R}_B^{-1}\boldsymbol{\mathcal{H}} + \mathbf{R}_A^{-1})^{-1}\mathbf{e}_d^{(a)}, \tag{27}$$

where $\mathbf{e}_d^{(a)}$ is an $N_t(Q+Q'+1)(L+L'+1)$ long unity vector with 1 at position $(a-1)(Q+Q'+1)(L+L'+1)+(Q+Q')(L+L'+1)/2+d$. Note that (27) is obtained from (26) by applying the matrix inversion lemma, and using the fact that $\mathbf{R}_A^{-1}\mathbf{r}_A^{(a)} = \mathbf{e}_d^{(a)}$.

The ZF solution can be obtained from the MMSE solution by setting the signal power to infinity. Hence the ZF solution is obtained as

$$\mathbf{w}_{ZF}^{(a)} = \mathbf{R}_B^{-1}\boldsymbol{\mathcal{H}}(\boldsymbol{\mathcal{H}}^H\mathbf{R}_B^{-1}\boldsymbol{\mathcal{H}})^{-1}\mathbf{e}_d^{(a)}. \tag{28}$$

For the ZF solution to exist, the matrix $\boldsymbol{\mathcal{H}}$ need to be of full column rank. A necessary condition for $\boldsymbol{\mathcal{H}}$ to be of full column rank is that the inequality $Nr(Q'+1)(L'+1) \geq N_t(Q+Q'+1)(L+L'+1)$ is satisfied. For sufficiently large L', and Q', this inequality is satisfied when the number of receive antennas is larger than the number of transmit antennas, i.e. $N_r \geq N_t + 1$. The MMSE equalizer always exists regardless of the number of receive antennas. However, the performance of the MMSE equalizer is largely improved if the above inequality is satisfied.

The design complexity of the ZF and MMSE equalizers involves a matrix inversion of size $P \times P$ with $P = N_t(Q+Q'+1)(L+L'+1)$. Therefore, the design complexity of the aforementioned equalizers is of $\mathcal{O}(P^3)$.

IV. Simulation Results

In this section we present some simulation results for the proposed equalization techniques for MIMO transmission over doubly selective channels. In these simulations, uncoded Quadrature Phase Shift Keying (QPSK) modulation is used. The channel is assumed to be perfectly known at the receiver. The BEM coefficients are then obtained by least-squares (LS) fitting the true underlying channel with the BEM. The performance of the proposed equalization techniques under channel estimation errors is outside the scope of this paper, and a topic of further investigation. The doubly selective channel is assumed to be of order $L = 3$. The channel taps are simulated as i.i.d random variables, correlated in time according to Jakes' model with correlation function $r_h[n] = J_0(2\pi n f_{max}T)$,

[1]Let $\mathbf{A}$ be the $pN \times qN$ matrix: $\mathbf{A} = \begin{bmatrix} \mathbf{A}_{11} & \dots & \mathbf{A}_{1q} \\ \vdots & \ddots & \vdots \\ \mathbf{A}_{p1} & \dots & \mathbf{A}_{pq} \end{bmatrix}$, where $\mathbf{A}_{ij}$ is the (i,j)th $N \times N$ sub-matrix of $\mathbf{A}$. The $p \times q$ matrix $\text{subtr}\{\mathbf{A}\}$ is then defined as $\text{subtr}\{\mathbf{A}\} = \begin{bmatrix} \text{tr}\{\mathbf{A}_{11}\} & \dots & \text{tr}\{\mathbf{A}_{1q}\} \\ \vdots & \ddots & \vdots \\ \text{tr}\{\mathbf{A}_{p1}\} & \dots & \text{tr}\{\mathbf{A}_{pq}\} \end{bmatrix}$.

This full text paper was peer reviewed at the direction of IEEE Communications Society subject matter experts for publication in the IEEE "GLOBECOM" 2008 proceedings.

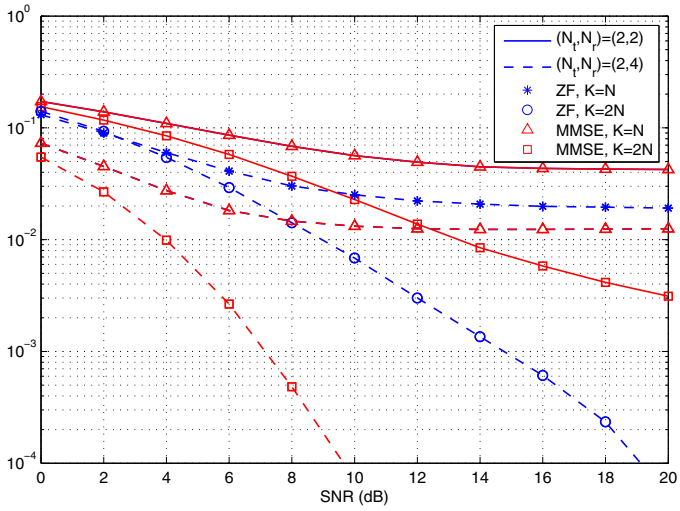

Fig. 3. BER vs SNR for MMSE and ZF Equalizers for MIMO transmission over Doubly Selective Channels

where J_0 is the zeroth-order Bessel function of the first kind, and $f_{\max}T = 0.001$ is the maximum normalized Doppler spread. We consider a window size $N = 800$. The BEM resolution is chosen to be $K = N$ and $K = 2N$. For $K = N$ the number of basis functions is $Q = 2$, while for $K = 2N$ the number of basis functions is $Q = 4$. We measure the performance in terms of bit error rate (BER) vs. SNR. The SNR is defined as $(L+1)E_s/\sigma_n^2$, where E_s is the transmitted symbol energy, and σ_n^2 is the additive white Gaussian noise variance. In all simulations the decision delay $d = \lfloor (L+L')/2 \rfloor + 1$.

For the ZF solution to exist we consider MIMO transmission with $N_t = 2$ transmit antennas, and $N_r = 4$ receive antennas. The time-varying FIR equalizer is then designed to have $Q' = 12$ time-varying complex exponential basis functions, and order $L' = 12$. For this setup we also consider the MMSE criterion to design the time-varying FIR equalizers. In addition to this, we also test the MMSE equalizer under the conditions where the ZF solution does not exist. In this case we consider MIMO transmission with $N_t = 2$ transmit antennas and $N_r = 2$ receive antennas. The number of basis function and the equalizers order remain the same as in the previous setup. The simulation results are shown in Figure 3.

As shown in Figure 3, the MMSE equalizers outperform the ZF equalizers for both cases of the BEM resolution $K = N$ and $K = 2N$. However, in all setups the MMSE as well as the ZF equalizers suffer from an early error floor for the BEM resolution $K = N$. The MMSE equalizers slightly outperform the ZF equalizers though. For the case of $N_t = N_r = 2$, the ZF solution does not exist, and so only the MMSE equalizers are compared. Apart from the diversity gain difference between the two setups mentioned above, it is observed that the MMSE equalizer performance is greatly enhanced when the ZF solution conditions are satisfied.

V. Conclusions

In this paper, time-varying FIR equalization techniques for MIMO transmission over doubly selective channels have been proposed. The time-varying multi-path fading channel as well as the time-varying FIR equalizers are modeled using the BEM. By doing so, the one-dimensional time-varying deconvolution problem is reduced to a two-dimensional time-invariant deconvolution problem in the time-invariant coefficients of the channel BEM coefficients, and the time-invariant coefficients of the BEM equalizer.

References

[1] E. Hänsler, "Some Properties of Transmission Systems with Minimum Mean Square Error," *IEEE Trans. Commun.*, vol. COM-19, pp. 576–579, Aug. 1971.

[2] T. Ericson, "Structure of Optimum Receiving Filters in Data Transmission Systems," *IEEE Trans. Inform. Theory*, vol. IT-17, pp. 352–353, May 1971.

[3] P. Monsen, "Feedback Equalization for Fading Dispersive Channels," *IEEE Trans. Inform. Theory*, vol. IT-17, pp. 1144–1153, Jan. 1971.

[4] C. Belfiore and J. P. Jr, "Decision Feedback Equalization," *Proc. IEEE*, vol. 67, pp. 1143–1156, Aug. 1979.

[5] N. Al-Dhahir and J. M. Cioffi, "MMSE Decision-Feedback Equalizers: Finite Length Results," *IEEE Trans. Inform. Theory*, vol. 41, pp. 961–975, July 1995.

[6] G. Forney, "Maximum Likelihood Sequence Estimation of Digital Sequences in the Presence of Intersymbol Interference," *IEEE Trans. Inform. Theory*, vol. IT-18, pp. 363–378, May 1972.

[7] X. Yu, , and S. Pasupathy, "Innovations-Based MLSE for Rayleigh Fading Channels," *IEEE Trans. Commun.*, vol. 43, pp. 1534–1544, Feb./Mar./Apr. 1995.

[8] B. Widrow and E. Walach, "On the Statistical Efficiency of the LMS Algorithm with Nonstationary Inputs," *IEEE Trans. Inform. Theory*, vol. 30, pp. 211–221, Mar. 1984.

[9] J. Lin, J. Proakis, F. Ling, and H. Lev-Ari, "Optimal Tracking of Time-Varying Channels: A Frequency Domain Approach for Known and New Algorithms," *IEEE J. Select. Areas Commun.*, vol. 13, pp. 141–154, Jan. 1995.

[10] L. Lindbom, M. Sterand, and A. Ahlén, "Tracking of Time-Varying Mobile Radio Channels-Part I: The Weiner LMS Algorithm," *IEEE Trans. Commun.*, vol. 49, pp. 2207–2217, Dec. 2001.

[11] D. Falconer and L. Ljung, "Application of Fast Kalman Estimation to Adaptive Equalization," *IEEE Trans. Commun.*, vol. 26, pp. 1439–1446, Oct. 1988.

[12] R. Lawrence and H. Kaufman, "The Kalman Filter for the Equalization of a Digital Communications Channel," *IEEE Trans. Commun.*, vol. 19, pp. 1137–1141, Dec. 1971.

[13] T. Lee and D. Cunningham, "Kalman Filter Equalization for QPSK Communications," *IEEE Trans. Commun.*, vol. 24, pp. 361–364, Mar. 1976.

[14] E. Eweda, "Comparisons of RLS, LMS, and Sign Algorithms for Tracking Randomly Time-Varying Channels," *IEEE Trans. Signal Processing*, vol. 42, pp. 2937–2944, Nov. 1994.

[15] D. K. Borah and B. D. Hart, "A Robust Receiver Structure for Time-Varying Frequency-Flat, Rayleigh Fading Channels," *IEEE Trans. Commun.*, vol. 47, pp. 360–364, Mar. 1999.

[16] D. K. Borah and B. D. Hart, "Receiver Structure for Time-Varying Frequency-Selective Fading Channels," *IEEE J. Select. Areas Commun.*, vol. 17, pp. 1863–1875, Nov. 1999.

[17] A. E. El-Mahdy, "Adaptive Channel Estimation and Equalization for Rapidly Mobile Communication Channels," *IEEE Trans. Commun.*, vol. 52, pp. 1126–1135, July 2004.

[18] I. Barhumi and M. Moonen, "On Maximum-Likelihood Equalization of Doubly Selective Channels," in *International Symposium on signal Processing and its Applications*, (Sharjah, UAE), Feb. 12-15 2007.

[19] I. Barhumi, G. Leus, and M. Moonen, "Time-Varying FIR Equalization of Doubly Selective Channels," *IEEE Trans. Wireless Commun.*, vol. 4, pp. 202–214, Jan. 2005.

This full text paper was peer reviewed at the direction of IEEE Communications Society subject matter experts for publication in the IEEE "GLOBECOM" 2008 proceedings.