Shortcuts in Circuits and Systems Education With a Case Study of the Thévenin/Helmholtz and Norton/Mayer Equivalents

Joos Vandewalle
Department of Electrical Engineering (ESAT-SCD)
Katholieke Universiteit Leuven B-3001 Leuven, Belgium
Joos.Vandewalle@esat.kuleuven.be

Abstract— **Basic Circuits and Systems CAS education is crucial in the first phase of any electrical engineering curriculum, but increasingly under threat. This situation is in many ways similar to that of mathematics education in engineering. Creative shortcuts for teaching mathematics have recently been advocated in the "streetfighting mathematics approach". Similar innovative, alternative ways can make the basic CAS education more effective. This special session aims to provide a forum where colleagues across the globe come together to share best practices, such as jewels or pedagogical shortcuts, and where they propose modern circuits, signals, and systems curricula for various target student audiences and discuss other related issues. Here we survey the contributions and discuss a case study, namely, the Thévenin/Helmholtz and Norton/Mayer equivalents.**

I. INTRODUCTION

The paper is organized as follows. After this introduction we discuss in Section II the didactical approach of shortcuts in the basic math and CAS education. In Section III, we survey the different contributions to the special session on shortcuts in CAS education. In Section IV, we discuss the merits and drawbacks of various approaches and versions to teach the Thévenin/Helmholtz and Norton/Mayer equivalents. Even though the T/H/N/M is and should remain popular in basic EE education, it is sometimes misused, and/or not presented in a solid way, thereby leading to a shallow understanding. Generalizations to multiports are seldom introduced, but extend the insight and open avenues for several applications. This leads to efficiency in the analysis of circuits and better practice in designs. Moreover the user is warned against improper use. In Section V, we draw conclusions and make recommendations.

II. SHORTCUTS IN MATHEMATICS AND CAS

Basic mathematics has in many university engineering curricula the unfortunate situation, that it is on the one hand increasingly important for many later courses, and for many professional activities, and on the other hand it is unpopular and feared among students. The author of the booklet [1] resolves this contradiction by a resolutely alternative approach for teaching mathematics. This approach has taken some momentum and a free copy of the book is available on the web. In order to understand this approach better, and in order to see how it can be useful for CAS basic education, let us have a look at an example in algebra [1]. This can illustrate how alternative formulations are more effective and appealing to students. We are interested in producing an insightful proof of the property that *the algebraic mean (a+b)/2 of two positive numbers a and b is larger than or equal to their geometric mean* $(ab)^{1/2}$.

Theorem: For a and b positive real numbers

$$(a+b)/2 \geq (ab)^{1/2} \qquad (1)$$

Proof 1: A simple *algebraic-symbolic proof*, starts from an expression that is valid for all real a and b

$$(a-b)^2=a^2-2ab+b^2\geq 0.$$

By a magic trick 4ab is added on both sides. We obtain

$$(a+b)^2=a^2+2ab+b^2\geq 4ab,$$

which produces $(a+b)/2\geq (ab)^{1/2}$. ■

Although each step is simple, this proof is not very convincing and the sequence of steps is far from obvious. A geometric proof is more convincing.

Proof 2: Observe that the main triangle ABC in Figure 1 is circumscribed by a circle and hence rectangular in A.

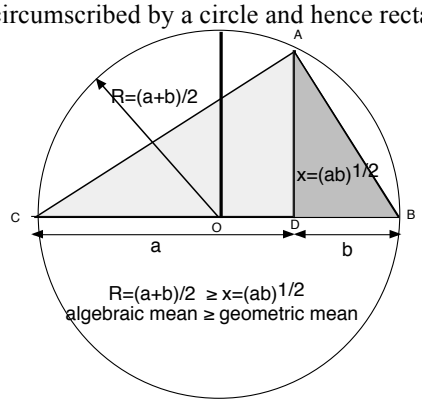

Figure 1. An intuitive geometric proof that the algebraic mean is larger than or equal to the geometric mean of two numbers.

Its hypothenuse BC has the length a+b and is a diagonal of the circle. The lighter triangle ADC and the darker triangle BDA are also rectangular and are similar, so that a/x=x/b. This leads to $x=(ab)^{1/2}$. Clearly the radius R of the circle is larger than x=AD and this proves $R=(a+b)/2 \geq x=(ab)^{1/2}$ ■

Such a geometric proof is not only more insightful, but it gives also intuition on the gap between the two means. Both sides of the inequality are close to each other, when $a \approx b$ and very different from each other when a>>b.

We learn from this example that *insightful arguments that are mathematically correct, can bring deeper insight in the topics*. The book [1] takes the unusual approach in teaching mathematics, not in the regular deductive and very rigid way, but by teaching the art of guessing results and solving problems without an impulsive resort to proofs, or an obstinate insistence on exact calculations. The techniques that are advocated include extreme-case reasoning, dimensional analysis, successive approximations, discretization, generalization from specific cases, and pictorial analysis. The applications that they use to motivate the students include mental calculations, solid geometry, musical intervals, logarithms, integration, infinite series, solitaire, and differential equations. In his preface, Carver Mead writes: "In this book there are insights for every one of us. I have personally adopted several of the techniques that you will find in there". It can also be a fruitful path for the CAS education in the same way as visual examples of a circuit simulator applet [2] can have an impact on the progress of the students.

III. Papers in the Special Session

This special session concentrates on shortcuts in basic circuit education and consists of 4 papers, including this contribution. They are briefly introduced here.

In the second paper, entitled "*A first course in Electronics"* Bernhard Boser, *(EECS Department, University of California, Berkeley)* describes the experience gained by a curriculum that focuses on applications of circuits and the limitations imposed by hardware without dealing with the p-n junctions, transistors and transistor networks. It introduces concepts like power and energy, analog and digital signals and conversion, the evolution of technology and the relationship between performance, cost and technology.

In the third paper, entitled "*Elegant Geometry of Fourier Analysis"*, Babak Ayazifar*, (EECS Department, University of California Berkeley),* proposes a geometric approach along a scheme that begins with the discrete-time Fourier series (DTFS), involving little mathematical complexity, then proceeds over the continuous-time Fourier series (CTFS) to the discrete-time Fourier transform (DTFT), which is treated as a dual of the CTFS. At last, the students are exposed to the continuous-time Fourier transform (CTFT), and can almost predict the transform and inverse-transform expressions. Applications such as amplitude modulation and sampling are then ripe for in-depth coverage. This geometric approach is a powerful tool that students can then carry to more advanced subjects, such as estimation theory, where they must make heavy use of orthogonal function expansions.

Ambelang Scott and Muthuswamy Bharathwaj (*Electrical Engineering***,** *Milwaukee School of Engineering),* show in the fourth paper*,* entitled *"From Van Der Pol to Chua - An Introduction to Nonlinear Dynamics and Chaos for Second Year Undergraduates",* how nonobvious topics of nonlinear dynamics and chaos can excite the interest of undergraduates. The students experiment how to obtain Chua's circuit with a cubic nonlinearity from the classic Van Der Pol oscillator. This approach guides the students progressively from the Hopf bifurcation phenomenon in the Van Der Pol oscillator to the period-doubling bifurcations in Chua's circuit. Using MATLAB simulation of the dynamic system, MultiSim simulation of the electronic circuit and finally a physical circuit realization on a breadboard, the phenomenon of nonlinear dynamics and chaos is introduced.

IV. Case Study of Thévenin/Helmholtz and Norton /Mayer Equivalents

Most textbooks in basic circuit theory, like [3-7], explain and use the Thévenin/Helmholtz and Norton/Mayer equivalents[1]. Also in most basic electrical engineering curricula this topic is well covered. However often some properties are not sufficiently explored and sometimes the equivalent is misused and the generalization to multiports is seldom introduced. It is the aim of this section to elucidate these elements as shortcuts. For an interesting historical context and general applicability of T/H/N/M see reference [8].

Version 1 Basic form of T/H/N/M equivalents. Any one port with linear resistors, capacitors, inductors and independent voltage and current sources, and linear controlled sources can be reduced to a series connection of a voltage source v_{OC} and an impedance Z (resp. parallel connection of a current source i_{SC} and a admittance Y) (see Figure 2).

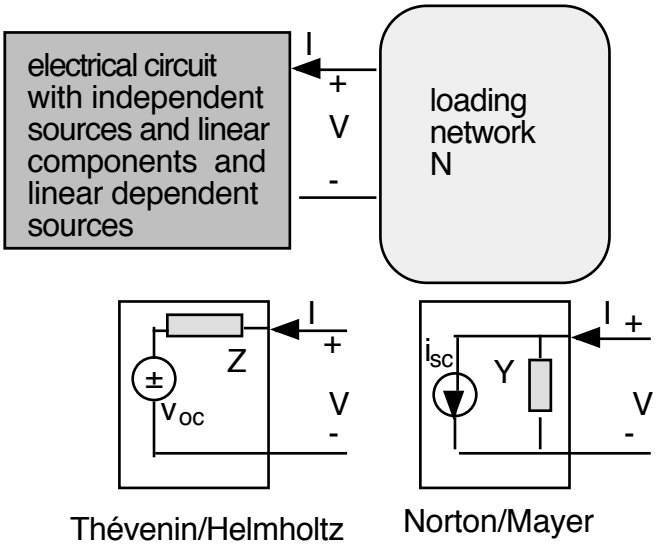

Figure 2. The Thévenin/Helmholtz and Norton/Mayer equivalent one ports.

[1] Since both equivalents have several inventors, and are narrowly related we will use the abbreviation T/H/N/M equivalent.

Version 1 has a time domain variant where I(t) and V(t) are time domain signals and where the impedance Z(s) reduces to a resistance R. The Laplace domain variant relates Laplace domain current I(s) and voltage V(s), and impedance Z(s). For the students this second variant implies that they should have mastered the use of the Laplace transform and the notion of impedances and admittances. But except for that, these variants are the same.

The value of this equivalent can be convincingly motivated towards students by showing them the applet webpage [2], where an example is given of a scary looking interconnection of voltage sources and current sources and resistors, that can be replaced by a single voltage source in series with a resistor by this equivalent. The remarkable property is that the equivalent resistor R or equivalent impedance Z is not a physically present resistor, or impedance Z but an equivalent as seen by the port. This value R for the equivalent resistor can be obtained by making in the circuit all independent voltage sources zero (i.e. short circuits) and all independent current sources zero (i.e. open circuits) and by measuring (or calculating) the resistance R or impedance Z between the two terminals of the one port. Of course in the determination of the equivalent impedance Z one should only set the independent sources to zero, but leave the dependent sources untouched. The voltage source v_{OC} (resp. current source i_{SC}), can be measured (or calculated) as the voltage across the one port when it is open i.e. I=0 (resp. as the current through the one port when it is shorted i.e. V=0).

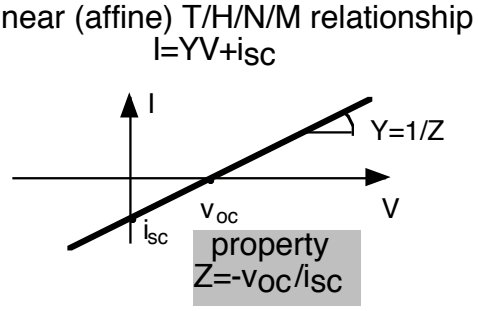

Figure 3. The linear (affine) relationship of Thévenin/Helmholtz and Norton/Mayer equivalent one ports.

The property expressed by T/H/N/M is that the pairs of I-V values that the one port with linear components and sources can accept, are described by *a straight line* (see figure 3)

$$I=YV+i_{SC} \qquad V=ZI+v_{OC}. \qquad (2)$$

Actually there are two interesting properties between the T/H an N/M theorems, that stem from the basic fact that all three one ports of figure 2 are described by this same straight line characteristic in the I-V plane. First the T/H and N/M have the same impedances i.e. Z=1/Y, and second the other two parameters satisfy

$$Yv_{OC}+i_{SC}=0. \qquad (3)$$

So only 2 out of the three parameters Z=1/Y, v_{OC}, and i_{SC} should be measured or calculated, and the other follows from (3). If on the other hand all 3 are measured, their values can be checked for correctness using this relationship.

There are three important remarks concerning the *validity* of T/H/N/M. First these equivalents are extremely general, but they depend critically *on the linearity of the components including the dependent sources*. In fact, many components are only linear over a certain range of values, thus the T/H equivalent is only valid within this linear range and may not be valid outside that range. Second, the T/H equivalent has an equivalent I-V characteristic only from the point of view of the load or the external network that is connected to the one-port. The power dissipation of the T/H (resp. N/M) equivalent is not necessarily identical to the power dissipation of the real system. However, the power dissipated by an external resistor between the two output terminals is the same regardless of how the internal circuit is represented. Third the controlling and the controlled port must both be located inside the one-port. So it cannot be applied when one port is located in the electrical circuit, that is modeled by T/H or N/M, and the other port in the loading network N. This case is handled in the multiport version 3, because then the two network parts interact through several ports.

Another interesting alternative derivation of T/H/N/M, that is advocated in textbooks, like [3,7], consists in setting up the nodal or mesh equations for the given one port and converting these into the basic equation of the I-V characteristic (2), and then identifying the coefficients for the T/H and N/M equivalents. The operations involved in this conversion are the typical elementary linear operations (see e.g. [9] that retain the solutions and eliminate some undesired variables, while keeping I and V.

There is a wealth of applications of T/H and N/M equivalents described in various texbooks [3-7] like maximum power transfer, time constant determination, loading the one port with a nonlinear resistive component, repeated determination of T/H and N/M equivalents for gradually larger networks, local operating point equivalent circuits, sensitivity analysis of a network, equivalent noise sources,.. A particularly frequent use is the time constant RC (resp. R/L) of a resistive one port loaded with a capacitor C (resp. an inductor L). Observe that the capacitor (resp. inductor) only sees from the circuit of the one port the T/H equivalent resistor R.

It can happen that there is an accuracy problem in calculating or measuring the port current for short circuit (3) (resp. the port voltage for open circuit). This shorting can lead to excessively large currents that are destructive for the circuit. In terms of calculations this implies that the currents are large numbers stemming from divisions by a small number, thereby leading to accuracy problems in the results. In version 2 a remedy for this problem was proposed by Hashemian [11].

Version 2 Two hybrid equivalents T/H/N/M

Figure 4 (a) presents an equivalent that has both a current source and a voltage source. Hence it combines ingredients of T/H and N/M and has some inherent redundancy. If these are chosen to take the values of the current through the one port and the voltage over the one port for a certain load of the one port, then no current will flow through the equivalent impedance Z when the one port is connected to this load.

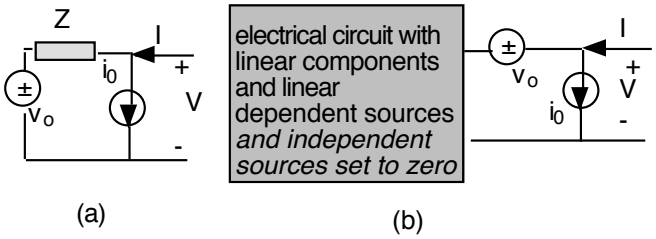

Figure 4. Two hybrid equivalent T/H/N/M one ports.

The second equivalent (Figure 4 (b)) inherits the topology of the components of the original circuit, but makes all independent sources zero. It pulls out an equivalent voltage source v_0 in series and a current source i_0 in parallel.

Version 3 Multiport version of T/H/N/M

Many applications need a generalization of the equivalents to multiports [10,11]. For the two-port case, the i-v relationship for a linear two-ports with sources, linear components and linear dependent sources is an affine relationship, that can be expressed in the current controlled case by

$$\begin{bmatrix} V_1 \\ V_2 \end{bmatrix} = \begin{bmatrix} Z_{11} & Z_{12} \\ Z_{21} & Z_{22} \end{bmatrix} \begin{bmatrix} I_1 \\ I_2 \end{bmatrix} + \begin{bmatrix} v_{10} \\ v_{20} \end{bmatrix} \qquad (4)$$

and in the voltage controlled case by

$$\begin{bmatrix} V_1 \\ V_2 \end{bmatrix} = \begin{bmatrix} Z_{11} & Z_{12} \\ Z_{21} & Z_{22} \end{bmatrix} \begin{bmatrix} I_1 \\ I_2 \end{bmatrix} + \begin{bmatrix} v_{10} \\ v_{20} \end{bmatrix} \qquad (5)$$

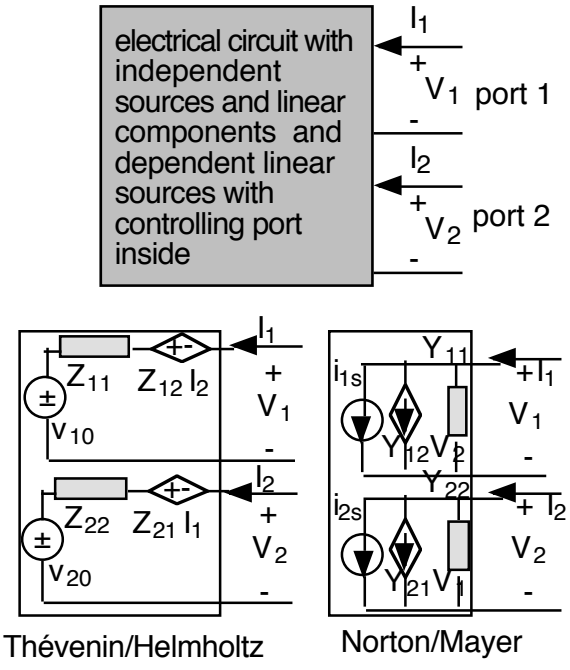

Figure 5. T/H and N/M equivalent two ports.

These expressions (4) (resp. (5)) can now easily be translated into T/H equivalents of Figure 5 left bottom (resp. N/M equivalents of Figure 5 right bottom). It is clear that controlled sources are needed for the off-diagonal elements in the impedance (resp. admittance) matrix. For some applications the hybrid two-port case, where one port is T/H and the other N/M, might be more appropriate than the T/H or the N/M cases of (3-4).

In our ambition to provide shortcuts in the didactical procedures for students in the first years of engineering, a good understanding of the T/H and N/M can simplify a complex circuit to a simple circuit. Thereby the students' attention is focused on the essentials of the problem at hand, and cluttering details are buried inside the equivalents. Hence it is recommended to introduce the T/H and N/M rather early in the educational program, and to exploit fully the benefits in later analysis and design courses.

V. Conclusions and Recommendations

Every new generation of students poses new challenges to our pedagogical approach and practice. Serious redesign of CAS education using pedagogical techniques that meet the needs of current and prospective students is inevitable. We advocate a hybrid approach to the teaching of circuits, signals, and systems—one rooted in interdisciplinary thinking and practice, and augmented by sound practical components and assessment tools. This, however, does imply a limitation to cookbook recipes. Rather, a solid academic teaching, and deeper understanding of these topics is important for engineering. It is believed that the T/H and N/M equivalents fit very well as shortcuts in CAS education.

Acknowledgment

We are grateful to our colleagues who have participated in the IEEE CAS Society Technical Committee on CAS Education and Outreach for many stimulating discussions. We also acknowledge financial support from the Research Council K.U. Leuven (GOA MANET, CoE EF/05/006) and the Belgian Federal Science Policy Office (IUAP DYSCO).

References

[1] S. Mahajan, "Street-fighting mathematics, the art of educated guessing and opportunistic problem solving", MIT Press, March 2010, ISBN-10:0-262-51429-X

http://mitpress.mit.edu/books/full_pdfs/Street-Fighting_Mathematics.pdf

[2] Falstad, Analog circuit simulator applet, http://www.falstad.com/circuit/e-resistors.html

[3] S. Karni, " *Applied circuit analysis*", New York, Wiley, 1988, p.121.

[4] F. Ulaby, and M. Maharbiz, "*Circuits*", NTS Press, 2009.

[5] C.A. Desoer, and E.S. Kuh, "*Basic circuit theory*", Mc Graw Hill Book co, New York, 1969, pp. 668-681.

[6] L.P. Huelsman, "*Basic circuit theory",* Prentice-Hall , 3rd ed. 1991, pp. 107-115.

[7] J.D. Irwin, and R. M. Nelms, "*Engineering circuit analysis*", International student edition, 10th edition, John Wiley & Sons, 2011, pp. 198-244, 399-403

[8] J.E. Brittain, "Thévenin's theorem", *IEEE Spectrum*, March 1990, p. 42.

[9] D. Lay, "*Linear algebra and ist applications* ", Pearson (4th ed.),2012.

[10] P.E. Gray, "Reference node r model", *Proceedings of IEEE*, Vol.71, No7, July1983, pp. 902-904.

[11] R. Hashemian, "Hybrid equivalent circuit, and alternative to Thévenin and Norton equivalents, its properties and applications", *Proc. Midwest Symp. On Circuits and Systems, MWSCAS 2009*, pp. 800-803.