Iterative Convex Approximation Based Real-Time Dynamic Spectrum Management in Multi-User Multi-Carrier Communication Systems

Paschalis Tsiaflakis, *Member, IEEE*, François Glineur, and Marc Moonen, *Fellow, IEEE*

***Abstract*—Iterative power difference balancing (IPDB) has recently been proposed as a first real-time dynamic spectrum management (RT-DSM) algorithm. It consists of a primal coordinate ascent approach where each coordinate step is performed using an exhaustive discrete grid line search. In this paper we present an iterative convex approximation based approach to perform the coordinate ascent search so as to reduce its computational complexity. By exploiting the problem structure, a closed-form solution is derived for the convex approximations. The resulting RT-DSM algorithm is referred to as *fast IPDB* (F-IPDB). Compared to IPDB, F-IPDB exhibits similar data rate performance with significantly reduced computational complexity, while also providing smoother final transmit spectra.**

***Index Terms*—Dynamic spectrum management, multi-user, power loading, real-time.**

I. Introduction

DYNAMIC SPECTRUM MANAGEMENT (DSM) is a powerful technique for interference management in multi-user multi-carrier communication systems. Transmit spectra of multiple users, each employing a multi-carrier transmission scheme such as orthogonal frequency division multiplexing (OFDM) or discrete multitone (DMT), are jointly coordinated so as to improve the multi-user system or network performance [1]–[9]. DSM is used in several systems, for instance digital subscriber line (DSL) systems and for downlink inter-cell interference coordination in cellular communications [10].

Real-time DSM (RT-DSM) is a recently proposed DSM paradigm in which real-time operation is considered [11]. More specifically, RT-DSM algorithms are iterative algorithms that can be stopped at any point in time to provide a feasible and improved solution. As a result, these algorithms can work under tight real-time constraints, i.e., under limited computing time and power budgets. This guarantees a fast response, which is important in practice, for instance when the channel and noise conditions change, when users enter or leave the network, and for cross-layer adaptive control. Most existing DSM algorithms are not real-time, due to their use of a dual decomposition approach that focuses on the dual DSM problem formulation [1]–[4], [7]–[9].

The iterative power difference balancing (IPDB) algorithm has been proposed as a first RT-DSM algorithm in [11]. IPDB starts from a primal DSM problem reformulation using a so-called Difference-of-Variables (DoV) transformation [11] in which alternative primal variables are considered. The problem is then solved using a primal coordinate ascent approach, where each coordinate step is performed using an exhaustive discrete grid line search. For a granularity of 1 dBm/Hz this corresponds to a search among more than 200 values, which constitutes the most computationally intensive part of IPDB.

The development of fast algorithms to reduce the computational complexity of exhaustive discrete grid line search based methods (e.g., [8], [9]) is recognized as an important and relevant research activity in DSM literature. In this paper we aim to reduce the computational complexity of IPDB by avoiding the exhaustive discrete grid line search. More specifically, we develop an iterative convex approximation approach to solve each coordinate ascent problem. Such iterative approximation approaches have already been recognized as a powerful technique to reduce the computational complexity of non RT-DSM algorithms [3]–[7]. Our approach differs from existing approaches in several important aspects: it focuses on the primal problem instead of the dual problem, it is tailored for real-time execution as each transmit power update satisfies the constraints and the cost function improves after each update, and it exploits the problem structure to derive closed-form solutions for the convex approximations used at every iteration. The resulting algorithm is referred to as *fast IPDB* (F-IPDB). Compared to

Manuscript received December 04, 2013; revised February 07, 2014; accepted February 24, 2014. Date of publication February 27, 2014; date of current version March 06, 2014. The work of P. Tsiaflakis was supported by the Research Foundation-Flanders (FWO). This work was carried out in the frame of KU Leuven Research CouncilCoE PFV/10/002, IUAP P7/23 BESTCOM 2012-2017 and Phase VII/19 DYSCO 2012-2017, GOA-MaNet, Research Project FWO G.091213, and IWT project CONGA. The scientific responsibility is assumed by its authors. The associate editor coordinating the review of this manuscript and approving it for publication was Prof. Shahram Shahbazpanahi.

P. Tsiaflakis is with the STADIUS Center for Dynamical Systems, Signal Processing and Data Analytics, KU Leuven, B-3001 Leuven, Belgium, and also with Bell Labs, Alcatel-Lucent, B-2018 Antwerp, Belgium (e-mail: paschalis.tsiaflakis@alcatel-lucent.com).

M. Moonen is with the STADIUS Center for Dynamical Systems, Signal Processing and Data Analytics, KU Leuven, B-3001 Leuven, Belgium (e-mail: marc.moonen@esat.kuleuven.be).

F. Glineur is affiliated with the Center for Operations Research and Econometrics, Université Catholique de Louvain, B-1348 Louvain-la-Neuve, Belgium, and also with the Institute of Information and Communication Technologies, Electronics and Applied Mathematics, Université catholique de Louvain, B-1348 Louvain-la-Neuve, Belgium (e-mail: francois.glineur@uclouvain.be).

Color versions of one or more of the figures in this paper are available online at http://ieeexplore.ieee.org.

Digital Object Identifier 10.1109/LSP.2014.2308978

1070-9908 © 2014 IEEE. Personal use is permitted, but republication/redistribution requires IEEE permission.
See http://www.ieee.org/publications_standards/publications/rights/index.html for more information.

IPDB, F-IPDB exhibits similar data rate performance with a significantly reduced computational complexity, while also providing smoother final transmit spectra:

II. System Model and Dynamic Spectrum Management

We consider a multi-user multi-carrier communication system with a set $\mathcal{N} = \{1, \ldots, N\}$ of N users communicating over a common set $\mathcal{K} = \{1, \ldots, K\}$ of K independent subcarriers or tones. We follow the multi-carrier interference channel system model where the multi-user interference is treated as additive white Gaussian noise. Perfect channel state information is assumed at all transmitters and receivers, which is a common assumption in DSL dynamic spectrum management literature [1]. The achievable bit rate of user n on tone k is then given by

$$b_k^n(\mathbf{s}_k) \triangleq \log_2\left(1 + \frac{1}{\Gamma}\frac{s_k^n}{\sum\limits_{m\neq n} a_k^{n,m} s_k^m + z_k^n}\right), \qquad (2)$$

where $\mathbf{s}_k = [s_k^1, \ldots, s_k^N]^T$, s_k^n is the transmit power of user n on tone k, $a_k^{n,m}$ is the normalized channel gain from user m to user n on tone k, and z_k^n is the normalized received noise power for user n on tone k. We note that normalization corresponds to dividing by the respective direct channel gain of user n and tone k, and that Γ is the signal-to-noise ratio (SNR) gap that characterizes imperfect coding and signal modulation, and a noise margin [12]. We consider continuous bit loadings without a maximum or minimum bit loading restriction.

The DSM problem can then be formulated as follows

$$\begin{aligned} \underset{s_k^n, k\in\mathcal{K}, n\in\mathcal{N}}{\text{maximize}} \quad & \sum_{n\in\mathcal{N}} \omega_n R^n(\mathbf{s}_k, k\in\mathcal{K}) \\ \text{subject to} \quad & P^n(s_k^n, k\in\mathcal{K}) = P^{n,\text{tot}}, \forall n \in \mathcal{N} \\ & 0 \le s_k^n \le s_k^{n,\text{mask}}, \forall n\in\mathcal{N}, \forall k \in \mathcal{K}, \\ \text{with} \quad & \begin{cases} R^n(\mathbf{s}_k, k\in\mathcal{K}) \triangleq \sum\limits_{k\in\mathcal{K}} b_k^n(\mathbf{s}_k) \\ P^n(s_k^n, k\in\mathcal{K}) \triangleq \sum\limits_{k\in\mathcal{K}} s_k^n, \end{cases} \end{aligned} \qquad (3)$$

where $R^n(\mathbf{s}_k, k\in\mathcal{K})$ is the achievable data rate of user n and its corresponding weighting ω_n, $P^n(s_k^n, k\in\mathcal{K})$ denoting the total allocated (transmit) power of user n, constant $P^{n,\text{tot}}$ is the total power budget of user n, and constant $s_k^{n,\text{mask}}$ is the maximum transmit power (spectral mask) of user n on tone k. This corresponds to a maximization of the sum of the weighted achievable data rates (with multiple tones), under per-user total power constraints and per-tone spectral mask constraints. The transmit spectrum of a user refers to the user's transmit powers over all tones. Note that although we focus on per-user total power equality constraints, extension to inequality constraints is possible (see [11]).

III. Real-Time Dynamic Spectrum Management

In [11] a RT-DSM algorithm has been defined as a DSM algorithm in which transmit powers are updated sequentially such that all constraints are satisfied after each single update. To achieve this, a so-called Difference-of-Variable (DoV) transformation has been proposed. We focus here on a particular DoV transformation, instead of keeping the full generality of the approach, so as to keep notation simple. We consider the following 'two-tone rand DoV' transformation,

$$s_k^n = t_k^n - t_{\pi(k)}^n + P^{n,\text{tot}}/K, \forall n\in\mathcal{N}, k\in\mathcal{K} \qquad (4)$$

where new variables t_k^n, $n\in\mathcal{N}$, $k\in\mathcal{K}$, are referred to as difference variables, π is a permutation of vector $[1,\ldots,K]$, and $\pi(k)$ represents its k-th element. We also define the inverse permutation operation $\pi^{-1}(\cdot)$ for later use, where $\pi^{-1}(\pi(k)) = k$. Permutation π must be chosen as a cycle of length K (there are $(K-1)!$ such possibilities), and can be (randomly) updated at each iteration. Initializing all t_k^n variables to zero leads to an initial equal power allocation over the tones in (4); more sophisticated initializations schemes can also be used.

Applying the two-tone rand DoV transformation (4) to (3) results in the DoV primal DSM problem reformulation (1). Its main advantage is that it no longer features coupling per-user total power constraints.

The IPDB algorithm is a RT-DSM algorithm that solves (1) using a coordinate ascent approach with an exhaustive discrete grid line search. More specifically the following primal subproblem in a single coordinate is solved iteratively over each tone and user:

$$\underset{t_k^{n,\min}\le t_k^n \le t_k^{n,\max}}{\text{maximize}} \; f(t_k^n), \qquad (5)$$

where $f(t_k^n)$ corresponds to the objective function of the RT-DSM problem reformulation (1) restricted to the single variable t_k^n. One can check that the spectral mask constraints on s_k^n transform into simple bound constraints, i.e., $t_k^{n,\min} \le t_k^n \le t_k^{n,\max}$ (see [11] for more details). As this corresponds to a one-dimensional problem on a finite interval, the proposed solution approach in [11] consists of an exhaustive line search over a discrete grid of points selected between $t_k^{n,\min}$ and $t_k^{n,\max}$. For a proposed granularity of 1 dBm/Hz, this comes down to more than 200 $f(t_k^n)$ function evaluations, which then constitutes the most computationally expensive part of IPDB:

IV. Fast Iterative Power Difference Balancing

To reduce the computational complexity of the exhaustive discrete grid line search and to mitigate its discrete character, we

$$\begin{aligned} \underset{t_k^n, k\in\mathcal{K}, n\in\mathcal{N}}{\text{maximize}} \quad & \overbrace{\sum_{n\in\mathcal{N}} \omega_n \sum_{k\in\mathcal{K}} \log_2\left(1 + \frac{1}{\Gamma}\frac{t_k^n - t_{\pi(k)}^n + P^{n,\text{tot}}/K}{\sum\limits_{m\neq n} a_k^{n,m}\left(t_k^m - t_{\pi(k)}^m + P^{m,\text{tot}}/K\right) + z_k^n}\right)}^{f(t_k^n, k\in\mathcal{K}, n\in\mathcal{N})} \\ \text{subject to} \quad & 0 \le t_k^n - t_{\pi(k)}^n + P^{n,\text{tot}}/K \le s_k^{n,\text{mask}}, \forall n\in\mathcal{N}, \forall k\in\mathcal{K} \end{aligned} \qquad (1)$$

propose an alternative approach to solve (5) based on a successive upper-bound minimization (SUM) or iterative convex approximation approach as treated in [13]. Our specific approach consists of iteratively performing the following two steps until convergence: (i) approximating the nonconcave function $f(t_k^n)$ by a concave function $f_{\text{ccv}}(t_k^n, \bar{t}_k^n)$ matching f to first-order around an approximation point $t_k^n = \bar{t}_k^n$, and (ii) solving exactly the corresponding convex problem (concave maximization), whose solution is used as the next approximation point. SUM[1] is guaranteed to converge to a stationary point under certain conditions on the concave function approximation [13]. For our specific case, these conditions correspond to the following:

$$f_{\text{ccv}}(\bar{t}_k^n, \bar{t}_k^n) = f(\bar{t}_k^n), \forall \bar{t}_k^n \in \mathcal{T}_k^n, \tag{7}$$

$$f_{\text{ccv}}(t_k^n, \bar{t}_k^n) \leq f(t_k^n), \forall t_k^n, \bar{t}_k^n \in \mathcal{T}_k^n, \tag{8}$$

$$f'_{\text{ccv}}(t_k^n, \bar{t}_k^n)|_{t_k^n = \bar{t}_k^n} = f'(\bar{t}_k^n), \forall \bar{t}_k^n \in \mathcal{T}_k^n, \tag{9}$$

$$f_{\text{ccv}}(t_k^n, \bar{t}_k^n) \text{ is continuous in } (t_k^n, \bar{t}_k^n), \tag{10}$$

where $\mathcal{T}_k^n = \{t | t_k^{n,\min} \leq t \leq t_k^{n,\max}\}$ and $f'(t_k^n)$ corresponds to the derivative with respect to t_k^n. At this point, it is helpful to express the (single-variable) function $f(t_k^n)$ as a sum of four terms, as is done in (6). Note that we isolate bit rates of user n (terms $f_a(t_k^n)$ and $f_c(t_k^n)$) from those of the periodical users (terms $f_b(t_k^n)$ and $f_d(t_k^n)$), and that, for a given user u, variable t_k^n only actually appears in exactly two bit rate terms, namely b_k^u (terms $f_a(t_k^n)$ and $f_b(t_k^n)$) and $b_{\pi^{-1}(k)}^u$ (terms $f_c(t_k^n)$ and $f_d(t_k^n)$). By taking the second derivative of the terms in (6) it can be seen that functions $f_a(t_k^n)$ and $f_c(t_k^n)$ are concave in t_k^n, and that functions $f_b(t_k^n)$ and $f_d(t_k^n)$ are convex in t_k^n, i.e., $f_a''(t_k^n) \leq 0$, $f_c''(t_k^n) \leq 0$, $f_b''(t_k^n) \geq 0$ and $f_d''(t_k^n) \geq 0, \forall t_k^n \in \mathcal{T}_k^n$.

We propose to approximate the convex terms $f_b(t_k^n)$ and $f_d(t_k^n)$ with a linearization in $t_k^n = \bar{t}_k^n$, while leaving the concave terms $f_a(t_k^n)$ and $f_c(t_k^n)$ untouched. The resulting approximation $f_{\text{ccv}}(t_k^n, \bar{t}_k^n)$ of $f(t_k^n)$ is given by

$$f_{\text{ccv}}(t_k^n, \bar{t}_k^n) \triangleq f_a(t_k^n) + f_c(t_k^n) + f_b(\bar{t}_k^n) + f_b'(\bar{t}_k^n)(t_k^n - \bar{t}_k^n) + f_d(\bar{t}_k^n) + f_d'(\bar{t}_k^n)(t_k^n - \bar{t}_k^n)$$

which satisfies conditions (7), (8), (9) and (10). As such, the proposed iterative approximation approach is guaranteed to converge to a stationary point of (5).

The remaining issue is to efficiently and exactly solve the corresponding convex approximated problem, given as:

$$\underset{t_k^{n,\min} \leq t_k^n \leq t_k^{n,\max}}{\text{maximize}} \; f_{\text{ccv}}(t_k^n, \bar{t}_k^n). \tag{11}$$

As (11) corresponds to a one-dimensional convex problem, the optimal solution either satisfies the following (unconstrained) optimality condition (12) or lies on the boundary of the feasible interval $\mathcal{T}_k^n$.

$$f'_{\text{ccv}}(t_k^n, \bar{t}_k^n) = 0. \tag{12}$$

[1]Successive upper-bound approximation pertains to minimization problems. As we consider a maximization problem, the upper-bound objective function approximation is replaced by a lower-bound objective function approximation.

We observe that this condition can be rewritten as a simple quadratic equation in the following standard form

$$\alpha_k^n (t_k^n)^2 + \beta_k^n t_k^n + \gamma_k^n = 0, \tag{13}$$

where $\alpha_k^n, \beta_k^n, \gamma_k^n$ can be computed in closed form. This is a key observation as this problem structure allows for a simple closed-form solution. We denote the (at most) two real roots of (13) as r_1 and r_2. The optimal solution to the convex approximated problem (11) can then be computed as

$$\underset{t \in \{r_1, r_2, t_k^{n,\min}, t_k^{n,\max}\} \cap \mathcal{T}_k^n}{\text{maximize}} \; f_{\text{ccv}}(t, \bar{t}_k^n), \tag{14}$$

which requires at most four $f_{\text{ccv}}(t_k^n, \bar{t}_k^n)$ function evaluations, including the boundary function values.

The whole procedure to perform the coordinate ascent step (5) is summarized in Algorithm 1 below. The F-IPDB algorithm corresponds to the IPDB algorithm [11] where the coordinate search step (line 7 in Algorithm 1 of [11]) is replaced by Algorithm 1. We note that all alternative configurations proposed for the IPDB algorithm in [11] are also applicable to F-IPDB.

Algorithm 1 Fast IPDB coordinate ascent search for (5)

1: Initialize approximation point $\bar{t}_k^n$
2: **repeat**
3: Construct $f_{\text{ccv}}(t_k^n, \bar{t}_k^n)$ around approximation point $\bar{t}_k^n$
4: Compute constants $\alpha_k^n, \beta_k^n, \gamma_k^n$ in (13)
5: Compute roots of quadratic equation (13)
6: $\tilde{t}_k^n \triangleq$ solution of (14); $\bar{t}_k^n = \tilde{t}_k^n$
7: **until** convergence to a stationary point of (5)

The main properties of the F-IPDB algorithm can be summarized as follows. First, F-IPDB is a RT-DSM algorithm: all constraints are satisfied after any t_k^n is updated, so that the algorithm can be stopped at any point in time. Secondly, F-IPDB uses continuous variables, in contrast to the discrete character of IPDB that relied on a finite grid search: it can thus potentially produce smoother transmit spectra, which will be demonstrated in Section V. Thirdly, the computational complexity of F-IPDB is much lower than that of IPDB, essentially because the solution of the convex approximation can be obtained in closed form. In addition, one can observe in practice that only a few, i.e., 2 or 3 approximations are needed for convergence of Algorithm 1 to an accuracy much smaller than 1 dBm/Hz. Concrete complexity improvements in simulation time will be reported in Section V. Fourthly, in contrast to typical DSM algorithms [1]–[9] that follow a dual decomposition approach, IPDB and F-IPDB focus on the primal solution, avoiding issues with a non-zero duality gap [2], [9]. Finally, we note that both IPDB and F-IPDB focus on finding stationary points, and do not guarantee convergence to the global optimum of (3). Theoretically, only convergence to stationary points of the subsequent coordinate searches is guaranteed. Theoretical convergence to stationary points of the whole problem (3) requires an unique

$$f(t_k^n) \triangleq \underbrace{\omega_n b_k^n(t_k^n)}_{f_a(t_k^n)} + \underbrace{\sum_{m \in \mathcal{N} \setminus n} \omega_m b_k^m(t_k^n)}_{f_b(t_k^n)} + \underbrace{\omega_n b_{\pi^{-1}(k)}^n(t_k^n)}_{f_c(t_k^n)} + \underbrace{\sum_{m \in \mathcal{N} \setminus n} \omega_m b_{\pi^{-1}(k)}^m(t_k^n)}_{f_d(t_k^n)} \tag{6}$$

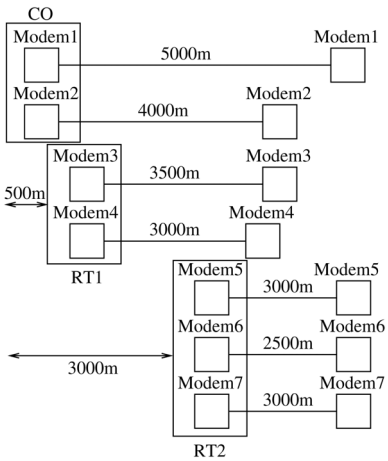

Fig. 1. Multi-user ADSL downstream scenario.

optimum for each coordinate search, which cannot be guaranteed as the problem we consider is nonconvex [14]. Nevertheless, fast convergence is observed in all simulations, which is reported in Section V for several ADSL scenarios.

V. Simulation Results

We focus on the realistic multi-user ADSL setting shown in Fig. 1, which is used to simulate a system ranging from two to seven users. For instance, the six-user (resp. four-user) scenario consists of only the upper six (resp. four) lines being active. Due to space limitation, we only present these scenarios but note that F-IPDB is applicable to large-scale communication systems (i.e. with more than 100 users and 1000 tones) without any serious computational difficulties, and with a different interference selectivity over subsets of users.

The DSL lines are modelled as 24 AWG twisted copper pairs following the direct and (1% worst-case) crosstalk channel and noise models from DSL standards [15], which results in specific values for $a_k^{m,n}$ and z_k^n in (2) that depend on the line lengths and overlaps of the considered scenarios. The SNR gap is chosen to be 12.9 dB, corresponding to a coding gain of 3 dB, a noise margin of 6 dB and a target symbol error probability of 10^{-7} [15].

For a fair comparison between F-IPDB and IPDB, we choose similar configurations for both methods as follows: two-tone rand DoV transformation, equalization active with a frequency of 5 outer iterations, and random initial powers. These configurations have been shown in [11] to be very effective. We also consider two similar Matlab implementations, only differing in the coordinate ascent step, and relate simulation time to computational complexity.

Comparing IPDB with a granularity of 1 dBm/Hz with F-IPDB for the four-user ADSL case of Fig. 1, we observe in our simulations that F-IPDB is 14 times faster than IPDB. Fig. 2 displays the optimized transmit spectrum of user 1, zoomed out for tones 7 to 32, for both F-IPDB and IPDB. It can be seen that F-IPDB indeed results in a much smoother transmit spectrum, which is due to the continuous formulation of F-IPDB versus the discrete line search used in IPDB.

Table I reports weighted data rate performance as in (3) (column perf.) and computational complexity in terms of simulation time (column compl.) for F-IPDB and IPDB with 1 dBm/Hz, 10 dBm/Hz and 20 dBm/Hz granularity. Data rate

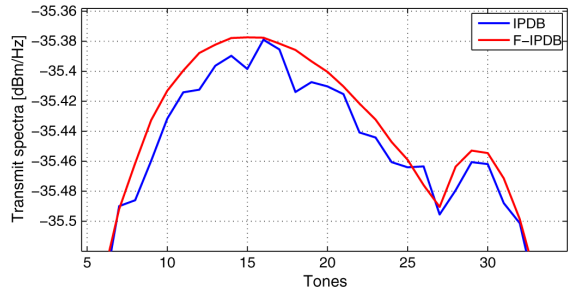

Fig. 2. Zoom of user 1 transmit spectra of four-user scenario in Fig. 1.

TABLE I
Complexity and Performance Comparison of F-IPDB and IPDB (With Different Granularities) forScenarios of Fig. 1

users	F-IPDB		IPDB (1 dBm/Hz)		IPDB (10 dBm/Hz)		IPDB (20 dBm/Hz)	
	compl. [%]	perf. [%]	compl. [%]	perf. [%]	compl. [%]	perf. [%]	compl. [%]	perf. [%]
2	8.2	100	100	100	18.9	100	28.9	100
3	7.0	100	100	100	17.0	100	25.5	100
4	6.7	100	100	100	15.7	100	25.8	100
5	11.1	98.9	100	97.4	27.7	95.6	22.9	94.4
6	11.5	96.9	100	99.7	26.7	99.7	25.7	99.5
7	9.2	97.8	100	99.9	23.2	99.9	24.4	99.9

performance is reported as a percentage of the optimal performance (computed using slower methods guaranteeing optimal performance for the considered scenarios, see [3]). Complexity is expressed as a percentage of the simulation time of IPDB with 1 dBm/Hz granularity. All results are averaged over 30 runs. It can be seen that all methods display similar performance. IPDB performance decreases slightly with coarser granularities. Note that the granularities refer to differences between powers, and as such large granularities still result in high accuracy [11]. Fast IPDB has a better performance for the five-user scenario but worse performance for the six- and seven-user case. This is explained by convergence to a different local optimum on average. Suboptimal (but still good performance) is due to the nonconvex (and NP-hard) nature of the DSM problem (3), and to the fact that F-IPDB and IPDB both target stationary points instead of globally optimal solutions. In terms of computational complexity, F-IPDB is seen to be faster by a factor of 10 (respectively 2) compared to IPDB with granularity 1 dBm/Hz (respectively 10 dBm/Hz). It is interesting to note that IPDB with 20 dBm/Hz is slower than IPDB with 10 dBm/Hz, because the coarser granularity results in slower convergence. A last advantage of F-IPDB is that it does not require tuning such a granularity parameter.

VI. Conclusion

A reduced-complexity primal RT-DSM algorithm has been proposed, referred to as F-IPDB, that enables operation under tight real-time constraints. Compared to the existing IPDB algorithm, it succeeds in significantly reducing the computational complexity (by a factor ranging from two to ten for realistic multi-user DSL scenarios), while providing smoother transmit spectra and maintaining good overall performance. This is achieved by a coordinate ascent search based on an iterative convex approximation approach in which the optimal solutions of the convex approximations are computed efficiently in closed-form.

REFERENCES

[1] R. Cendrillon, W. Yu, M. Moonen, J. Verlinden, and T. Bostoen, "Optimal multiuser spectrum balancing for digital subscriber lines," *IEEE Trans. Commun.*, vol. 54, no. 5, pp. 922–933, May 2006.

[2] Z. Q. Luo and S. Zhang, "Dynamic spectrum management: Complexity and duality," *IEEE J. Sel. Topics Signal Process.*, vol. 2, no. 1, pp. 57–73, Feb. 2008.

[3] P. Tsiaflakis, M. Diehl, and M. Moonen, "Distributed spectrum management algorithms for multiuser DSL networks," *IEEE Trans. Signal Process.*, vol. 56, no. 10, pp. 4825–4843, Oct. 2008.

[4] S. Huberman, C. Leung, and T. Le-Ngoc, "Dynamic spectrum management (DSM) algorithms for multi-user xDSL," *IEEE Commun. Surv. Tutorials*, vol. 14, no. 1, 2012, First quarter.

[5] P. Tsiaflakis and F. Glineur, "Spectrum optimization in multi-user multicarrier systems with iterative convex and nonconvex approximation methods," 2012 [Online]. Available: http://arxiv.org/abs/1308.5809

[6] T. Wang and L. Vandendorpe, "Successive convex approximation based methods for dynamic spectrum management," in *IEEE Int. Conf. Communications*, Ottawa, ON, Canada, Jun. 2012, pp. 4061–4065.

[7] J. Papandriopoulos and J. S. Evans, "SCALE: A low-complexity distributed protocol for spectrum balancing in multiuser DSL networks," *IEEE Trans. Inf. Theory*, vol. 55, no. 8, pp. 3711–3724, Aug. 2009.

[8] R. Cendrillon and M. Moonen, "Iterative spectrum balancing for digital subscriber lines," in *Proc. IEEE Int. Conf. Communications*, May 2005, vol. 3, no. 3, pp. 1937–1941.

[9] W. Yu and R. Lui, "Dual methods for nonconvex spectrum optimization of multicarrier systems," *IEEE Trans. Commun.*, vol. 54, no. 7, Jul. 2006.

[10] K. Son, S. Lee, Y. Yi, and S. Chong, "REFIM: A practical interference management in heterogeneous wireless access networks," *IEEE J. Sel. Areas Commun.*, vol. 29, no. 6, pp. 1260–1272, Jun. 2011.

[11] P. Tsiaflakis, F. Glineur, and M. Moonen, "Real-time dynamic spectrum management for multi-user multi-carrier communication systems," *IEEE Trans. Commun.*, 10.1109/TCOMM.2014.012614.130580.

[12] T. Starr, J. M. Cioffi, and P. J. Silverman, *Understanding Digital Subscriber Lines*. Upper Saddle River, NJ, USA: Prentice-Hall, 1999.

[13] M. Razaviyayn, M. Hong, and Z.-Q. Luo, "A unified convergence analysis of block successive minimization methods for nonsmooth optimization," *SIAM J. Optim.*, vol. 23, no. 2, pp. 1126–1153, 2013.

[14] D. P. Bertsekas, *Nonlinear Programming*, 2nd ed. Belmost, MA, USA: Athena Scientific, 1999.

[15] *Spectrum Management for Loop Transmission Systems*, no. 2, 2003, ANSI Draft Std. T1E1.4/2003-002R1.