A Low Complexity Branch and Bound Approach to Optimal Spectrum Balancing for Digital Subscriber Lines

Paschalis Tsiaflakis, Jan Vangorp and Marc Moonen
Department of Electrical Engineering
Katholieke Universiteit Leuven, Belgium
{Paschalis.Tsiaflakis, Jan.Vangorp, Marc.Moonen}@esat.kuleuven.be

Jan Verlinden
DSL Experts Team
Alcatel Bell, Belgium
Jan.VJ.Verlinden@alcatel.be

***Abstract*— Crosstalk is a major source of performance degradation in modern xDSL systems. Optimal Spectrum Balancing (OSB) is an algorithm that mitigates the effect of crosstalk by allocating optimal transmit spectra to all interfering DSL modems. Unfortunately, its complexity grows exponentially with the number of lines in the binder. For multiple user scenarios this becomes computationally intractable. This paper presents a branch and bound approach to OSB. The proposed branch and bound operations require almost no computation keeping the total computational complexity low. Simulations show enormous complexity reductions, especially for a large number of users.**

I. Introduction

The performance of current xDSL systems can be degraded severely by crosstalk, which is typically 10-20 dB larger than the background noise. A promising technique for mitigating the effect of crosstalk is Dynamic Spectrum Management (DSM) [1] [2]. Here the transmit spectrum of each modem is designed to cause only little disturbance to other lines, while preserving a high data rate.

Optimal Spectrum Balancing (OSB) [3] [4] is a centralized algorithm that calculates the optimal transmit spectra for a network of interfering DSL lines. By the use of a dual decomposition OSB decouples the spectrum management problem into K independent per-tone optimization problems, where K is the number of tones. However these per-tone optimization problems are non-convex with many local optima. Hence, an exhaustive search was proposed to find the global maximum. Unfortunately the set size of feasible solutions is exponential in the number of users N. This becomes computationally intractable for more than five users.

In [5] [6] an iterative approach is presented to solve the per-tone optimization problems. It is claimed that these algorithms are computationally tractable for multiple user scenarios and lead to near-optimal performance. Unfortunately, it is not possible to compare their performance with the optimal performance for scenarios with more than five users.

In this paper a branch and bound approach is presented to solve the per-tone optimization problem. Branch and bound [7] [8] is a general method for finding optimal solutions of various optimization problems. The proposed branch and bound operations require almost no computation keeping the total computational complexity low.

This paper is organized as follows. In section II the system model for the crosstalk environment is described. In section III the spectrum management problem and the OSB algorithm are discussed. In section IV the low complexity branch and bound approach is presented. Finally, in section V the complexity of the proposed branch and bound procedure is compared with the complexity of the exhaustive search.

II. System Model

Most current DSL systems use Discrete Multi-Tone (DMT) modulation. The transmission for a binder of N users can be modelled on each tone k by

$$\mathbf{y}_k = \mathbf{H}_k \mathbf{x}_k + \mathbf{z}_k \qquad k = 1 \ldots K.$$

The vector $\mathbf{x}_k = [x_k^1, x_k^2, \ldots, x_k^N]^T$ contains the transmitted signals on tone k for all N users. $[\mathbf{H}_k]_{n,m} = h_k^{n,m}$ is an $N \times N$ matrix containing the channel transfer functions from transmitter m to receiver n on tone k. The diagonal elements are the direct channels, the off-diagonal elements are the crosstalk channels. $\mathbf{z}_k$ is the vector of additive noise on tone k, containing thermal noise, alien crosstalk, RFI,.... The vector $\mathbf{y}_k$ contains the received symbols.

The transmit power is denoted as $s_k^n \triangleq \Delta_f E\{|x_k^n|^2\}$, the noise power as $\sigma_k^n \triangleq \Delta_f E\{|z_k^n|^2\}$. The vector containing the transmit power of user n on all tones is $\mathbf{s}^n \triangleq [s_1^n, s_2^n, \ldots, s_K^n]^T$. The DMT symbol rate is denoted as f_s, the tone spacing as Δ_f.

When the number of interfering modems is large, the interference is well approximated by a Gaussian distribution.

Paschalis Tsiaflakis is a research assistant with the F.W.O. Vlaanderen.
Jan Vangorp is a research assistant with the ESAT/SISTA laboratory.

This research work was carried out at the ESAT laboratory of the Katholieke Universiteit Leuven, in the frame of Belgian Programme on Interuniversity Attraction Poles, initiated by the Belgian Federal Science Policy Office IUAP P5/22 and P5/11, Research Project FWO nr.G.0196.02 ('Design of efficient communication techniques for wireless time-dispersivemulti-user MIMO systems') and IWT project: 'SOPHIA 'Stabilization and Optimization of the PHysical layer to Improve Applications' and was partially sponsored by Alcatel-Bell. The scientific responsibility is assumed by its authors.

Under this assumption the achievable bit loading of user n on tone k, given the transmit spectra $\mathbf{s}_k \triangleq [s_k^1, s_k^2, \ldots, s_k^N]^T$ of all modems in the system, is

$$b_k^n \triangleq \log_2\left(1 + \frac{1}{\Gamma}\frac{|h_k^{n,n}|^2 s_k^n}{\sum_{m\neq n}|h_k^{n,m}|^2 s_k^m + \sigma_k^n}\right), \qquad (1)$$

where Γ denotes the SNR-gap to capacity, which is a function of the desired BER, the coding gain and noise margin [9]. The total bit rate for user n is

$$R^n = f_s \sum_k b_k^n.$$

Conversely, when the bit loading $\mathbf{b}_k \triangleq [b_k^1, b_k^2, \ldots, b_k^N]^T$ of all the users is given for a specific tone k, the required transmit power for the modems in the system can be calculated by [3]

$$\mathbf{s}_k = \left(\mathbf{D}_k - \mathbf{\Lambda}_k \mathbf{A}_k\right)^{-1} \mathbf{\Lambda}_k \sigma_k \qquad (2)$$

$$\begin{aligned}
\mathbf{D}_k &\triangleq \mathrm{diag}\{|h_k^{1,1}|^2, |h_k^{2,2}|^2, \ldots, |h_k^{N,N}|^2\} \\
\mathbf{\Lambda}_k &\triangleq \mathrm{diag}\{2^{b_k^1}-1, 2^{b_k^2}-1, \ldots, 2^{b_k^N}-1\} \\
[\mathbf{A}_k]_{n,m} &\triangleq a_k^{n,m} \quad \text{with} \quad a_k^{n,m} \triangleq \begin{cases} 0 & n=m \\ \Gamma|h_k^{n,m}|^2 & n\neq m \end{cases} \\
\sigma_k &\triangleq \Gamma[\sigma_k^1, \sigma_k^2, \ldots, \sigma_k^N]^T.
\end{aligned}$$

The total power used by user n is then

$$P^n = \sum_k s_k^n.$$

Note that, based on formulae (1) and (2), every $\mathbf{s}_k$ corresponds to a $\mathbf{b}_k$, and vice versa. Finding optimal transmit spectra $\mathbf{s}_k$ (referred to as "power loading") is therefore equivalent to finding optimal bit loads $\mathbf{b}_k$ (referred to as "bit loading"). The Optimal Spectrum Balancing problem (section III) is mostly presented as a power loading problem. Our branch and bound procedure will be presented as a bit loading problem.

III. Optimal Spectrum Balancing

The objective is to find the optimal transmit spectra for a binder of interfering DSL lines, maximizing the bit rate of one line subject to total power constraints, spectral mask constraints and bit rate constraints. This is referred to as the spectrum management problem and can be formulated as follows

$$\begin{aligned}
\max_{\mathbf{s}^1,\ldots,\mathbf{s}^N} R^1 \quad & \text{s.t.} \quad R^n \geq R^{n,target} \quad , \quad \forall n>1, \\
& \text{s.t.} \quad \textstyle\sum_k s_k^n \leq P^n \quad , \quad \forall n, \\
& \text{s.t.} \quad 0 \leq s_k^n \leq s_k^{n,mask}, \quad \forall n, \forall k,
\end{aligned} \qquad (3)$$

where $R^{n,target}$ denotes the target bit rate for modem n and $s_k^{n,mask}$ denotes the spectral mask for modem n on tone k. Note that the total power constraints and target bit rate constraints couple the optimization problem over the tones. This results in a solution set with a dimensionality which is exponential in the number of users and tones, namely $\mathcal{O}(B^{NK})$ where B is the number of possibilities for the bit or power loading for each tone and each user. In [3] [4] it is shown that OSB reduces this dimensionality by a dual decomposition. Using Lagrange multipliers, the constraints causing the coupling over the tones are moved into the cost function:

$$\begin{aligned}
\mathbf{s}^{1,opt}, \ldots, \mathbf{s}^{N,opt} = \quad & \mathrm{argmax}_{\mathbf{s}^1,\ldots,\mathbf{s}^N} \textstyle\sum_{n=1}^N \omega_n R^n \\
& + \textstyle\sum_{n=1}^N \lambda_n \left(P^{n,tot} - \sum_{k=1}^K s_k^n\right) \\
\text{with} \quad & 0 \leq s_k^n \leq s_k^{n,mask} \quad , \quad \forall n, \forall k, \\
& \lambda_n \geq 0, \omega_n \geq 0 \quad , \quad \forall n.
\end{aligned} \qquad (4)$$

In [4] [10] efficient methods are presented to search for the Lagrange multipliers λ_n, ω_n that enforce the constraints. For given Lagrange multipliers, optimization problem (4) is decoupled over the tones, resulting in K independent problems of dimension $\mathcal{O}(B^N)$. Unfortunately these optimization problems are non-convex with many local optima. Each per-tone optimization problem can be formulated as

$$s_k^{1,opt}, \ldots, s_k^{N,opt} = \underset{s_k^1,\ldots,s_k^N}{\mathrm{argmax}} \underbrace{\sum_{n=1}^N \omega_n f_s b_k^n}_{1} - \underbrace{\sum_{n=1}^N \lambda_n s_k^n}_{2} \qquad (5)$$

$$\text{subject to} \quad 0 \leq s_k^n \leq s_k^{n,mask} \quad n = 1 \ldots N.$$

The previously proposed method to solve this per-tone optimization problem is an exhaustive search. As the dimensionality of the solution set is exponential in the number of users, this becomes computationally intractable for more than five lines. Unfortunately, binders typically consist of 20-100 lines.

IV. A Low Complexity Branch and Bound Procedure for OSB

Branch and bound [7] [8] is a general technique for finding optimal solutions of various optimization problems. A branch and bound procedure has two ingredients. The first ingredient is a smart way of covering the feasible region by several smaller subregions. This leads to a branching operation. The second ingredient is bounding, which is a way of finding upper and lower bounds for the optimal solution within a feasible subregion. The core of the approach is the simple observation that (for a maximization task) if the upper bound of a subregion A is smaller than the lower bound for some other subregion B, then subregion A may be safely discarded from the search. The efficiency of the method depends critically on the effectiveness of the used branching and bounding operations. There is no universal bounding operation that works for all problems. In the remainder of this section a branch and bound procedure will be presented particularly for the per-tone optimization problem (5).

The procedure starts from an **initial solution set** containing all feasible solutions. A possible initial solution set based on the maximum bit loading of every user is as follows

$$B = \left\{\mathbf{b}_k \in \mathcal{R}^N, \forall n : 0 \leq b_k^n \leq b_k^{n,MAX}\right\}, \qquad (6)$$

where $b_k^{n,MAX}$ is the maximum bit loading for user n on tone k. Note that we focus on the bit loading instead of the power

loading (see section II). In [11] it is proven that the power loading increases with increasing bit loading. Based on this fact a tighter initial solution set can be defined by (7)

$$B = \quad \{\mathbf{b}_k \in \mathcal{R}^N, \forall n : \\ 0 \leq b_k^n \leq \min(\log_2\big(1 + \tfrac{1}{\Gamma}\tfrac{|h_k^{n,n}|^2 s_k^{n,mask}}{\sigma_k^n}\big), b_k^{n,MAX})\}. \quad (7)$$

The **branching operation** splits every region in 2^N rectangular subregions. This is done by splitting each dimension (bit loading range for 1 particular user) of the considered region in two. One has several options for splitting a dimension: two equal parts, two parts delimited by integer bit loadings, two parts delimited by fractional bit loadings,.... In the case of integer bit loading the branching can be stopped when all the regions have dimensions smaller than or equal to 1 bit. Figure 1 depicts the branching operation starting from an initial solution set for a three-user case. It can be remarked that this "rectangular" branching allows a region (e.g. region I) to be fully characterized by its two extreme points $\mathbf{b}_k^{min}$ and $\mathbf{b}_k^{max}$ as shown in figure 1 (with $b_k^{n,min} \leq b_k^n \leq b_k^{n,max}$ for all n, in the considered region).

After the branching operation, a number of the generated subregions can be discarded from the search because their bit loadings correspond to power loading combinations that do not satisfy the spectral mask constraints of (5). In [11] it is proven that the power loading increases with increasing bit loading. This means that the point $\mathbf{b}_k^{min}$ of figure 1 corresponds to a power loading that is smaller than every other power loading in the considered subregion I. If this point $\mathbf{b}_k^{min}$ does not satisfy the spectral mask constraint, than no point of the considered subregion satisfies the spectral mask constraint and so the subregion can be discarded from the search. Formula (2) can be used to check the spectra corresponding to $\mathbf{b}_k^{min}$.

The **first bound operation** is the calculation of a **lower bound** for the maximum of a subregion. In fact, the cost function value of any bit loading combination of the considered subregion can be used as a lower bound. As the spectra corresponding to $\mathbf{b}_k^{min}$ have already been calculated to check the spectral mask constraints, the cost function value of this point can be used as a lower bound. The calculation of the lower bound (8) is a simple sum of products which requires almost no computational complexity.

$$\text{lower bound}_{region} = \sum_{n=1}^{N} \omega_n f_s b_k^{n,min} - \sum_{n=1}^{N} \lambda_n s_k^{n,min} \quad (8)$$

The **second bound operation** is the calculation of an **upper bound** for the maximum of a subregion. Formula (5) consists of two terms. Term 1 increases with increasing bit loading. Term 2 decreases with increasing bit loading because the power loading increases with increasing bit loading [11]. An exact upper bound of term 1 is $\sum_{n=1}^{N} \omega_n f_s b_k^{n,max}$. An exact upper bound of term two is $-\sum_{n=1}^{N} \lambda_n s_k^{n,min}$. The sum of the upper bounds of term 1 and term 2 is an upper bound for the total expression.

$$\text{upper bound}_{region} = \sum_{n=1}^{N} \omega_n f_s b_k^{n,max} - \sum_{n=1}^{N} \lambda_n s_k^{n,min}. \quad (9)$$

Note that the spectra $s^{n,min}, \forall n$ have already been calculated. The calculation of the upper bound (9) is a simple sum of products. As can be seen, the bound operations require almost no computational complexity. The effectiveness of these bounds in discarding regions is checked by simulations. This is presented in the simulations section.

The complete branch and bound procedure for optimization problem (5) is presented in algorithm 1.

Algorithm 1 Branch and bound procedure for OSB

1: Start from an initial solution set containing all feasible solutions as defined by (6) or (7)
2: Branching: split the region(s) into subregions (e.g. figure 1)
3: Discard the subregions which do not satisfy the spectral mask constraints
4: Bounding: determine lower and upper bounds for the maximum of each subregion as defined by (8) and (9)
5: Determine maximum lower bound MAX_low of all subregions.
6: Remove all subregions with a upper bound smaller than MAX_low.
7: **if** desired accuracy achieved **then** stop
8: **else** go to step 2

The spectrum management problem (5) takes total power constraints into account. Suffice it to say that in some cases, the spectral mask constraints are so constraining that the total power constraints are always met, namely when $\sum_k s_k^{n,mask} \leq P^{n,tot}, \forall n$. In this case (5) reduces to term 1 and the calculation of the lower bound and upper bound is simplified to:

$$\text{lower bound}_{region} = \sum_{n=1}^{N} \omega_n f_s b_k^{n,min} \quad (10)$$

$$\text{upper bound}_{region} = \sum_{n=1}^{N} \omega_n f_s b_k^{n,max}. \quad (11)$$

The effectiveness of the presented branch and bound procedures depends on how fast regions are discarded. We already explained that a region is discarded from the search when this region has an upper bound smaller than the lower bound of any other region. The presence of a region with a large lower bound thus speeds up the convergence. Typically there is a lot of correlation between neighbouring tones. The optimal bit or power loading of tone k does not change a lot from the optimal bit or power loading of tone $k+1$. When the optimal bit or power loading of tone k is known, the region containing this

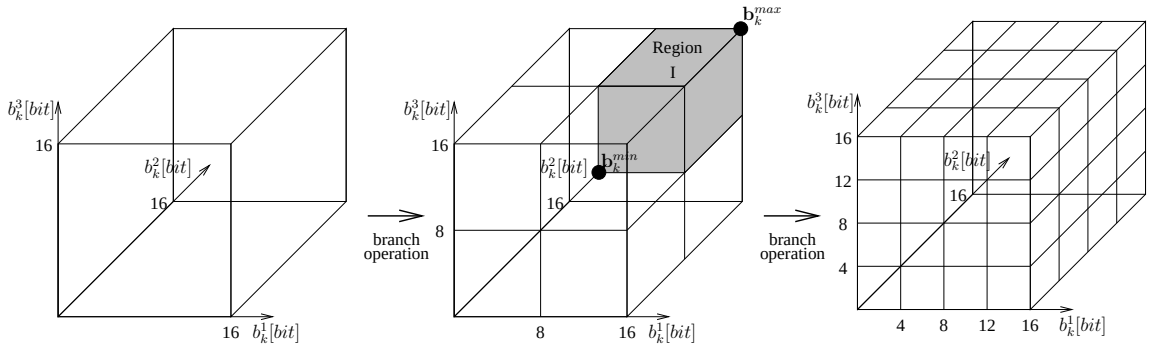

Fig. 1. Branching operation for a three-user case starting from an initial solution set based on the maximum bit loading with $b_k^{n,MAX} = 16$. Each axis corresponds to the bit loading of a particular user for tone k. The middle figure emphasizes the fact that a region can be fully characterized by its two points $\mathbf{b}_k^{min}$ and $\mathbf{b}_k^{max}$.

optimum can be used in the branch and bound procedure for tone $k+1$ as a good approximation of the optimum, having a large lower bound. This simple trick speeds up the convergence significantly.

A similar observation is that the optimal bit or power loading of tone k does not change much whenever the Lagrange multipliers λ_n are updated (towards the values that enforce the total power constraints). A similarly simple trick can then be used to speed up the convergence.

V. Simulation Results

This section presents simulation results of the proposed branch and bound procedures and their complexity is compared to the complexity of an exhaustive search. The ADSL scenarios use a line diameter of 0.5 mm (24 AWG). The maximum transmit power is 20.4 dBm [12]. The SNR gap Γ is 12.9 dB, corresponding to a coding gain of 3 dB, a noise margin of 6 dB and a target symbol error probability of 10^{-7}. The tone spacing Δ_f is 4.3125 kHz and the DMT symbol rate f_s is 4 kHz. The simulations are performed in Matlab on a dual Opteron 250 with 4 GB RAM and a 2.4 GHz processor.

A. Symmetric scenario

The first scenario is a symmetric scenario and is shown in figure 2. The simulations are performed for a two-user case ($N = 2$) up to an eight-user case ($N = 8$). The computational complexity of both the branch and bound procedure and the exhaustive search procedure consists of calculating expression (5) for given Lagrange multipliers λ_n, ω_n and for a particular bit loading. The main part of this computation corresponds to calculating the spectra for a particular bit loading, as defined by formula (2). Table I compares the computational complexity of the branch and bound procedure given by algorithm (1) and the exhaustive search. The 'Users' column indicates the number of users. The '% ev of (2)' column presents the percentage of evaluations of expression (2) with respect to the number of evaluations of expression (2) by the exhaustive search. The 'c.r.f.' column gives the complexity reduction factor with respect to the exhaustive search. This is the inverse of the previous column and is a good indication of how

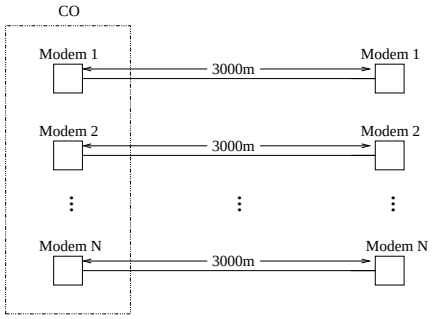

Fig. 2. Symmetric N-user ADSL scenario

much less computation is needed to converge to the optimal solution. The 'avg p.-t.t.' column shows the average time needed to solve the per-tone optimization problem (5). The 'ADSL DS' column shows the time needed to find the optimal spectra of the ADSL Downstream scenario. This is the time needed to solve the per-tone optimization problem (5) for all tones multiplied by the typical number of Lagrange multiplier evaluations needed on average to enforce the constraints. In [4], it is explained that the number of Lagrange multiplier evaluations is typically 50.

It can be seen that the complexity reduction factor increases as the number of users increases. For eight users there is an enormous reduction in complexity with a factor 4000. Using the exhaustive search procedure, it is impossible to simulate scenarios with more than five users. With the proposed branch and bound procedures one can simulate up to eight-user scenarios on the same platform.

B. Asymmetric scenario

The second scenario is an asymmetric scenario and is show in figure 3. The simulations are performed for a two-user case ($N = 2$) up to an eight-user case ($N = 8$). The four-user scenario, for example, consists of modem 1 up to modem 4. Table II shows the results for the spectrum management problem with total power constraints and spectral mask constraints. The complexity reduction factors increase with increasing

TABLE I

COMPUTATIONAL COMPLEXITY COMPARISON OF PROPOSED BRANCH AND BOUND PROCEDURE AND EXHAUSTIVE SEARCH PROCEDURE FOR SYMMETRIC ADSL DOWNSTREAM SCENARIO WITH POWER CONSTRAINTS AND SPECTRAL MASK CONSTRAINTS

	Branch and Bound procedure				Exhaustive Search procedure			
Users	% ev of (2)	c.r.f.	avg p.-t.t.	ADSL DS	% ev of (2)	c.r.f.	avg p.-t.t.	ADSL DS
2	12.39	8.1	0.0028 sec	31.46 sec	100	1	0.0097 sec	109.3 sec
3	2.72	36.8	0.0087 sec	1.63 min	100	1	0.1653 sec	30.85 min
4	0.89	112.1	0.0444 sec	8.29 min	100	1	2.55 sec	7.93 hour
5	0.31	321.2	0.2603 sec	48.58 min	100	1	46.7 sec	6.05 day
6	0.13	740.7	1.9380 sec	6.03 hour	100	1	14.2 min	110 day
7	0.05	1892.8	12.9200 sec	1.67 day	100	1	(3.8 hour)	(4.85 year)
8	0.02	4120.3	104.1349 sec	13.42 day	100	1	(2.7 day)	(82.6 year)

TABLE II

COMPUTATIONAL COMPLEXITY COMPARISON OF PROPOSED BRANCH AND BOUND PROCEDURE AND EXHAUSTIVE SEARCH PROCEDURE FOR ASYMMETRIC ADSL DOWNSTREAM SCENARIO WITH POWER CONSTRAINTS AND SPECTRAL MASK CONSTRAINTS

	Branch and Bound procedure				Exhaustive Search procedure			
Users	% ev of (2)	c.r.f.	avg p.-t.t.	ADSL DS	% ev of (2)	c.r.f.	avg p.-t.t.	ADSL DS
2	10.68	9.4	0.0022 sec	25.20 sec	100	1	0.0085 sec	95.14 sec
3	2.10	47.6	0.0064 sec	71.67 sec	100	1	0.1496 sec	27.93 min
4	0.73	136.6	0.0369 sec	6.89 min	100	1	2.5637 sec	7.97 hour
5	0.26	384.6	0.2239 sec	41.78 min	100	1	45.90 sec	5.95 day
6	0.14	697.8	2.1188 sec	6.59 hour	100	1	14.2 min	110 day
7	0.06	1601.6	15.94 sec	2.06 day	100	1	(3.8 hour)	(4.85 year)
8	0.02	4026.5	136.70 sec	17.72 day	100	1	(2.7 day)	(82.6 year)

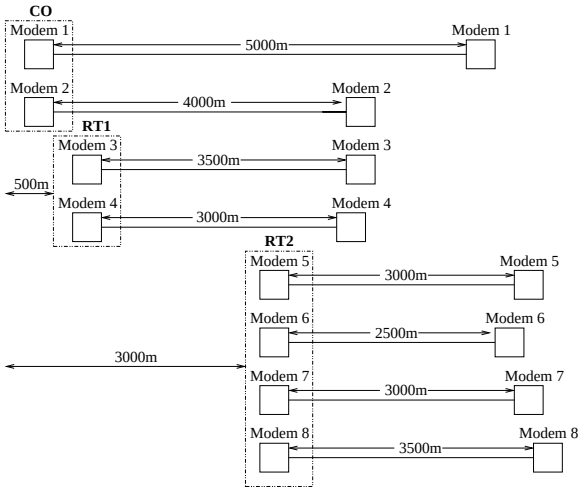

Fig. 3. Asymmetric N-user ADSL scenario

number of users. For an eight-user case there is a complexity reduction with a factor 4000.

VI. CONCLUSION

Optimal Spectrum Balancing is an algorithm to mitigate the effect of crosstalk by allocating optimal transmit spectra in a network of interfering DSL modems. By a dual decomposition this algorithm decouples the spectrum management problem into per-tone optimization problems which are typically solved by an exhaustive search. For multi-user scenarios this becomes computationally intractable. In this paper, a branch and bound procedure is presented with very simple branch and bound operations which require almost no computational complexity. Simulations show enormous complexity reductions of up to factor 4000 for eight-user scenarios .

REFERENCES

[1] Thomas Starr, Massimo Sorbara, John M. Cioffi, Peter J. Silverman, *DSL Advances, ch. 11*. Prentice Hall, 2002.

[2] W. Yu, G. Ginis and J. Cioffi, "Distributed Multiuser Power Control for Digital Subscriber Lines," *IEEE J. Sel. Area. Comm.*, vol. 20, no. 5, pp. 1105–1115, Jun. 2002.

[3] R. Cendrillon, W. Yu, M. Moonen, J. Verlinden and T. Bostoen, "Optimal Multi-user Spectrum Management for Digital Subscriber Lines," *accepted for IEEE Trans. Comm.*

[4] P. Tsiaflakis, J. Vangorp, M. Moonen, J. Verlinden, K. Van Acker, "An Efficient Search Algorithm for the Lagrange Multipliers of Optimal Spectrum Balancing in Multi-user xDSL Systems," in *accepted for publication in IEEE ICASSP*, May 2006.

[5] Raphael Cendrillon, Marc Moonen, "Iterative Spectrum Balancing for Digital Subscriber Lines," in *International Communications Conference (ICC)*, May 2005.

[6] Raymond Lui and Wei Yu, "Low-Complexity Near-Optimal Spectrum Balancing for Digital Subscriber Lines," in *International Communications Conference (ICC)*, May 2005.

[7] "Definition: Branch and bound," From Wikipedia, the Free Encyclopedia.

[8] P.M. Pardalos, H.E. Romeijn, *Handbook of Global Optimization Volume 2 (Nonconvex Optimization and Its Applications)*, 1 ed. Springer, June 2002.

[9] Thomas Starr, John M. Cioffi, Peter J. Silverman, *Understanding Digital Subscriber Lines*. Prentice Hall, 1999.

[10] W. Yu, R. Lui and R. Cendrillon, "Dual Optimization Methods for Multiuser Orthogonal Frequency-Division Multiplex Systems," in *IEEE Globecom*, vol. 1, Dec. 2004, pp. 225–229.

[11] P. Tsiaflakis, J. Vangorp, M. Moonen, J. Verlinden, "A Low Complexity Branch and Bound Procedure for Optimal Spectrum Balancing in a Multi-User xDSL Environment," *in preparation*, 2006.

[12] *Asymmetrical digital subscriber line (ADSL) transceivers*, ITU Std. G.992.1, 1999.