# Acoustic Feedback Cancellation in a Closed-Loop System Identification Framework

**Toon van Waterschoot, Marc Moonen**
Katholieke Universiteit Leuven - Dept. of Electrical Engineering (ESAT - SCD/SISTA)
Kasteelpark Arenberg 10, B-3001 Heverlee (Leuven), Belgium
{*tvanwate, moonen*}*@esat.kuleuven.ac.be*

Abstract

In a PA system the loudspeaker sound is often fed back into the microphone. This may result in system instability which is perceived as 'howling'. Acoustic Feedback Cancellation (AFC) aims at identifying the unknown room impulse response, so that the feedback signal can be estimated and cancelled. This comes down to Closed-Loop System Identification, which often leads to biased estimates. A recently proposed, unbiased AFC technique for hearing aids applies Filtered-X adaptive filtering. We relate this technique to standard Prediction Error and Instrumental Variable identification methods.

## 1 Problem

A Public Address (PA) system consists of one or more microphones, an amplifier and loudspeakers. Acoustic feedback occurs when loudspeaker sound is picked up again by a microphone. A closed loop is thus born and gives rise to distortion and howling.

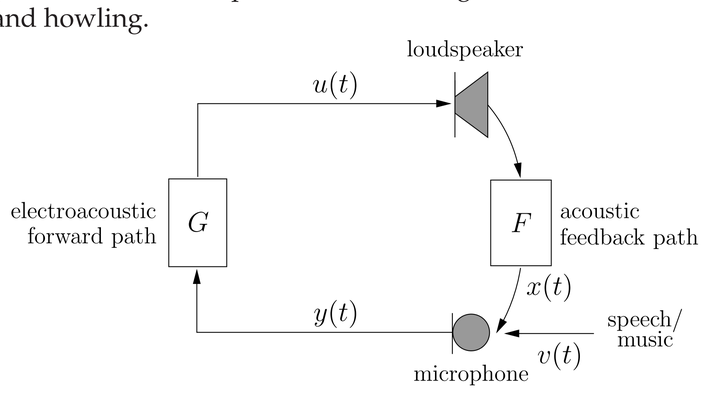


Considering a simple 1-microphone/1-loudspeaker setup, the closed loop TF from source signal $X(z)$ to loudspeaker signal $U(z)$ is given by

$$\frac{U(z)}{X(z)} = \frac{G(z)}{1 - G(z)F(z)}$$

System stability depends on both the electroacoustic forward path TF $G(z)$ and the acoustic feedback path TF $F(z)$. If there exists a frequency $\omega$ for which

$$|G(e^{i\omega})F(e^{i\omega})| \geq 1 \quad and \quad \angle G(e^{i\omega})F(e^{i\omega}) = n2\pi, n \in \mathbb{Z}$$

the system will start oscillating. Even before the onset of oscillation the sound quality may be severely degraded by distortion and ringing effects.

## 2 Acoustic Feedback Cancellation

Acoustic Feedback Cancellation (AFC) aims at identifying the unknown room impulse response $F(q^{-1}, t)$, so that the feedback signal $x(t)$ can be estimated and cancelled.

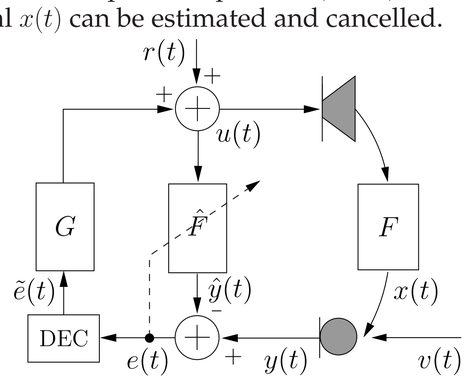


In standard AFC an FIR adaptive filter $\hat{F}(q^{-1}, t)$ is updated with an (N)LMS algorithm. This leads to a biased estimate of $F(q^{-1}, t)$, unless

- a persistently exciting probe signal $r(t)$ is injected at the loudspeaker,
- or an appropriate delay $d$ is added to the forward path: $\tilde{e}(t) = e(t - d)$,
- or a nonlinearity is added to the forward path, e.g.
  - a frequency shift: $\tilde{e}(t) = e(t)\cos(2\pi\Delta_f t) - \hat{e}(t)\sin(2\pi\Delta_f t)$
  - a phase modulation: $\tilde{e}(t) = e(t)e^{jk\sin\omega_m t}$
  - a half wave rectifier: $\tilde{e}(t) = e(t) + \alpha(e(t) + |e(t)|)$

AFC Acoustic Feedback Cancellation
IV Instrumental Variable
LS Least Squares
PA Public Address
PE Prediction Error
TF Transfer Function

## 3 Closed-Loop System Identification

The AFC closed-loop identification problem can be illustrated as follows:

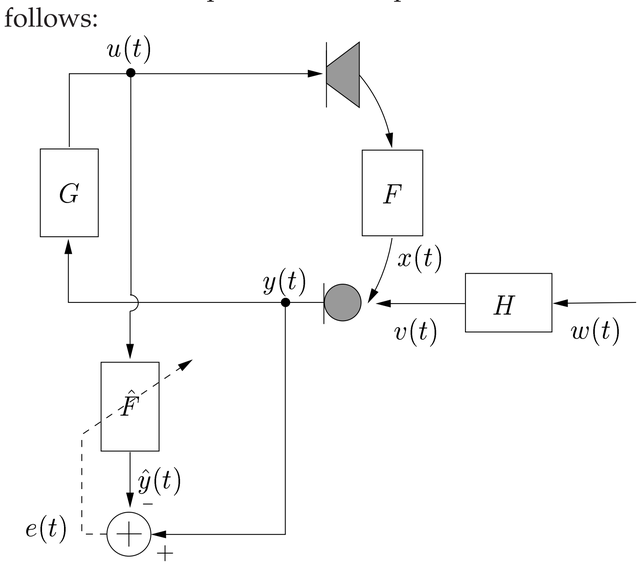


System: $y(t) = F(q^{-1}, t)u(t) + v(t)$, $u(t) = G(q^{-1}, t)y(t)$, $v(t) = H(q^{-1}, t)w(t)$

Model: $y(t) = \hat{F}(q^{-1}, t)u(t) + e(t)$, $e(t) = \hat{H}(q^{-1}, t)w(t)$

If we model the unknown room impulse response as an FIR filter $\hat{F}(q^{-1}, t)$ the estimation problem becomes

$$\begin{bmatrix} u(N) & u(N-1) & \dots & u(N-n_{\hat{F}}) \\ u(N-1) & u(N-2) & \dots & u(N-n_{\hat{F}}-1) \\ \vdots & \vdots & \ddots & \vdots \\ u(1) & u(0) & \dots & u(-n_{\hat{F}}+1) \end{bmatrix} \cdot \begin{bmatrix} \hat{f}_0 \\ \hat{f}_1 \\ \vdots \\ \hat{f}_{n_{\hat{F}}} \end{bmatrix} + \begin{bmatrix} e(N) \\ e(N-1) \\ \vdots \\ e(1) \end{bmatrix} = \begin{bmatrix} y(N) \\ y(N-1) \\ \vdots \\ y(1) \end{bmatrix}$$

$$\mathbf{U}\hat{\mathbf{f}} + \mathbf{e} = \mathbf{y}$$

### 3.1 Prediction Error Identification

A standard LS approach (i.e. PE identification with a quadratic norm, no noise model, no prefiltering) yields a biased estimate

$$\hat{\mathbf{f}}_{\mathbf{LS}} = \arg\min_{\hat{\mathbf{f}}} \frac{1}{N}\sum_{t=1}^{N} e^2(t, \hat{\mathbf{f}}) = (\mathbf{U}^T\mathbf{U})^{-1}\mathbf{U}^T\mathbf{y} = \mathbf{f} + \underbrace{(\mathbf{U}^T\mathbf{U})^{-1}\mathbf{U}^T\mathbf{v}}_{\text{bias}}$$

since $u(t)$ is a filtered version of $y(t)$ and $y(t)$ contains $v(t)$, so that the total expectation

$$\bar{E}\mathbf{u}(t)v(t) \triangleq \lim_{N\to\infty}\frac{1}{N}\sum_{t=1}^{N} E\mathbf{u}(t)v(t) = \lim_{N\to\infty}\frac{1}{N}E\mathbf{U}^T\mathbf{v} \neq \mathbf{0}_{(n_{\hat{F}}+1)\times 1}$$

A solution to this consistency problem is to prefilter the data $\{u(t), y(t)\}_{t=1}^{N}$ with a time-varying prefilter $L(q^{-1}, t)$:

$$\mathbf{L}\mathbf{U}\hat{\mathbf{f}} + \mathbf{L}\mathbf{e} = \mathbf{L}\mathbf{y},$$

$$\mathbf{L} = \begin{bmatrix} l_0(N) & l_1(N) & \dots & l_{n_L}(N) & 0 & \dots & 0 \\ 0 & l_0(N-1) & \dots & l_{n_L-1}(N-1) & l_{n_L}(N-1) & \dots & 0 \\ \vdots & \vdots & \ddots & \vdots & \vdots & \ddots & \vdots \\ 0 & 0 & \dots & 0 & 0 & \dots & l_{n_L}(1) \end{bmatrix}$$

Minimizing the prefiltered prediction error $L(q^{-1}, t)e(t)$ in a LS sense yields

$$\hat{\mathbf{f}}_{\mathbf{LS},L} = (\mathbf{U}^T\mathbf{L}^T\mathbf{L}\mathbf{U})^{-1}\mathbf{U}^T\mathbf{L}^T\mathbf{L}\mathbf{y} = \mathbf{f} + \underbrace{(\mathbf{U}^T\mathbf{L}^T\mathbf{L}\mathbf{U})^{-1}\mathbf{U}^T\mathbf{L}^T\mathbf{L}\mathbf{v}}_{\text{bias}}$$

Now if the prefilter $L(q^{-1}, t)$ is a consistent estimate of the inverse noise model $H^{-1}(q^{-1}, t)$, and $\mathbf{U}^T\mathbf{L}^T\mathbf{L}\mathbf{U}$ has full rank, then an unbiased estimate of $\mathbf{f}$ can be obtained:

$$\hat{\mathbf{f}}_{\mathbf{LS},L} = \mathbf{f} + (\mathbf{U}^T\mathbf{L}^T\mathbf{L}\mathbf{U})^{-1}\mathbf{U}^T\mathbf{L}^T\mathbf{w} = \mathbf{f}$$

### 3.2 Instrumental Variable Identification

Alternatively an IV approach can be applied to the above estimation problem:

$$\hat{\mathbf{f}}_{\mathbf{IV}} = \left[\frac{1}{N}\sum_{t=1}^{N}\mathbf{z}_{\mathbf{IV}}(t)\mathbf{u}^T(t)\right]^{-1}\frac{1}{N}\sum_{t=1}^{N}\mathbf{z}_{\mathbf{IV}}(t)y(t) = (\mathbf{Z}_{\mathbf{IV}}\mathbf{U})^{-1}\mathbf{Z}_{\mathbf{IV}}\mathbf{y}$$

with the instrument matrix $\mathbf{Z}_{\mathbf{IV}} = \left[\mathbf{z}_{\mathbf{IV}}(N) \ \dots \ \mathbf{z}_{\mathbf{IV}}(-n_L+1)\right]$. The IV estimate is consistent if two conditions are met:

$$\begin{cases} \bar{E}\mathbf{z}_{\mathbf{IV}}(t)v(t) = 0 \\ \bar{E}\mathbf{z}_{\mathbf{IV}}(t)\mathbf{u}^T(t) \text{ has full rank} \end{cases}$$

An interesting choice for the instrument matrix would be

$$\mathbf{Z}_{\mathbf{IV}} = \mathbf{U}^T\mathbf{L}^T\mathbf{L} \Rightarrow \hat{\mathbf{f}}_{\mathbf{LS},L} = \hat{\mathbf{f}}_{\mathbf{IV}}$$

In other words the LS estimate with prefiltering $\hat{\mathbf{f}}_{\mathbf{LS},L}$ is equivalent to the IV estimate $\hat{\mathbf{f}}_{\mathbf{IV}}$ if we construct the instruments by (backward) filtering the loudspeaker signal with prefilter $L(q^{-1}, t)$ and subsequently forward filtering it with $L(q, t)$.

If for some reason $\hat{\mathbf{f}}_{\mathbf{LS},L}$ is biased, a more consistent IV estimate may still be obtained with an instrument matrix

$$\mathbf{Z}_{\mathbf{IV}}{}^{opt} = \min_{\mathbf{Z}_{\mathbf{IV}}} \|(\mathbf{Z}_{\mathbf{IV}}\mathbf{U})^{-1}\mathbf{Z}_{\mathbf{IV}}\mathbf{v}\|^2$$

## 4 Recursive Identification using Adaptive Filters

The above identification strategy requires simultaneous estimation of the room impulse response $F(q^{-1}, t)$ and the inverse noise model $H^{-1}(q^{-1}, t)$. This can be done recursively by minimizing the instantaneous prefiltered error as in a Filtered-X adaptive filtering scheme (with $F_0(q^{-1})$ the cancellation filter):

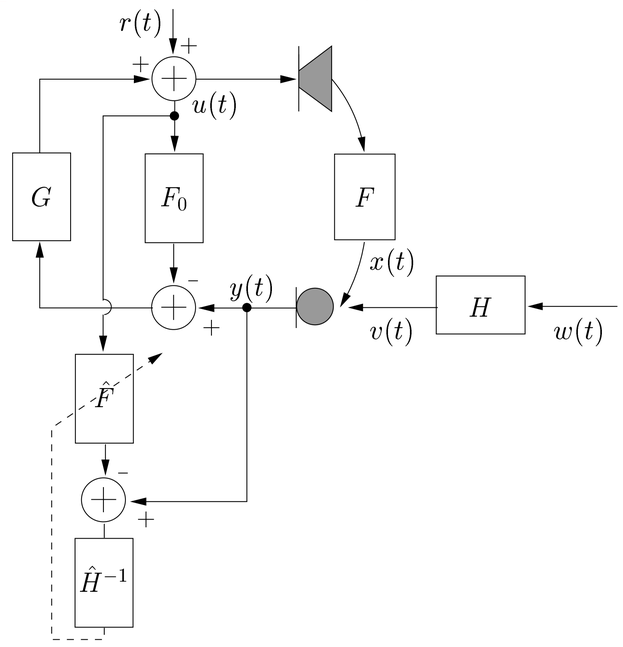


If we translate this to a two-channel adaptive filtering scheme and minimize the instantaneous error $e(t) = B(q^{-1}, t)u(t) + A(q^{-1}, t)y(t)$, the desired solution $B(q^{-1}, t) = -H^{-1}(q^{-1}, t) * F(q^{-1}, t)$ and $A(q^{-1}, t) = H^{-1}(q^{-1}, t)$ is obtained if we include a delay $d \geq N_A$ in the forward path $G(q^{-1}, t)$ [*Spriet et al.*, 2002]:

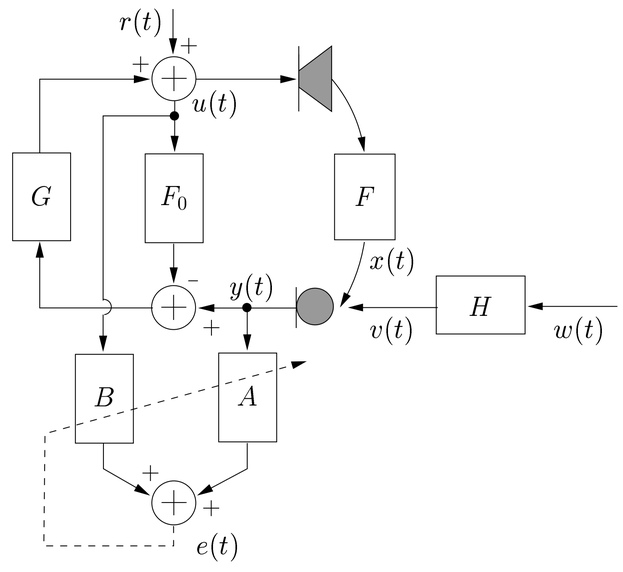


Further research will focus on problems that arise when applying this hearing aid AFC technique to PA systems.