Design and Evaluation of DSP Algorithms for Feedback Cancellation in Public Address Systems

Toon van Waterschoot, Marc Moonen
Katholieke Universiteit Leuven - Dept. of Electrical Engineering (ESAT - SCD/SISTA)
Kasteelpark Arenberg 10, B-3001 Heverlee (Leuven), Belgium
{*tvanwate, moonen*}*@esat.kuleuven.ac.be*

1 Problem

A Public Address (PA) system consists of one or more microphones, an amplifier and loudspeakers. **Acoustic feedback** occurs when loudspeaker sound is picked up again by a microphone. A closed loop is thus born and gives rise to distortion and howling.

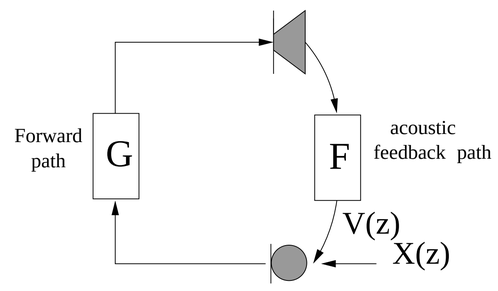

Considering a simple 1-microphone/1-loudspeaker setup, the closed loop TF from source signal $X(z)$ to feedback signal $V(z)$ at the microphone is given by

$$\frac{V(z)}{X(z)} = \frac{G(z)F(z)}{1 - G(z)F(z)}$$

System stability depends on both the forward path amplification TF $G(z)$ and the acoustic feedback path TF $F(z)$. If there exists a frequency ω for which

$$|G(e^{i\omega})F(e^{i\omega})| \geq 1 \quad and \quad \angle G(e^{i\omega})F(e^{i\omega}) = n2\pi, n \in \mathbb{Z}$$

the system will start oscillating. Even before the onset of oscillation the sound quality may be severely degraded by distortion and ringing effects.

2 Existing techniques

2.1 Overview

Several techniques for feedback suppression/cancellation have been proposed, with applications to either PA systems or hearing aids:

- manual microphone and/or loudspeaker repositioning
- manual equalization and/or gain reduction
- inclusion of frequency shifter in $G(z)$ [*Schroeder*, 1964]
- inclusion of fixed phase shift in $G(z)$ [*Preves*, 1985]
- inclusion of time-varying delay in $G(z)$ [*Bustamante et al.*, 1989]
- adaptive inverse filtering [*Bustamante et al.*, 1989]
- beam dithering [*Elko et al.*,, 1993]
- inclusion of self-adjusting notch filter in $G(z)$
- adaptive feedback cancellation

2.2 Self-adjusting notch filter

In commercial equipment for PA systems **notch filters** are usually applied to reduce feedback. Some algorithm detects 'critical' frequencies at which gain margin is low and oscillation is likely to occur. Forward path TF $G(z)$ is then given a notch characteristic at these frequencies.

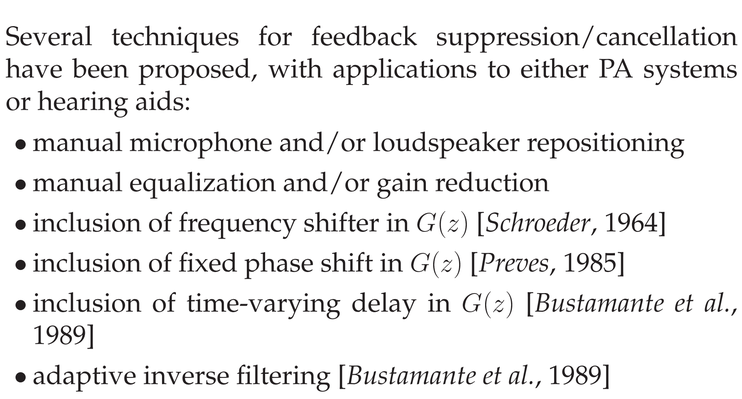

Disadvantages of this technique:

- *reactive* approach (awaits onset of howling)
- deterioration of sound signal
- pre-oscillatory distortions remain

AFC Adaptive Feedback Canceller
ASG Added Stable Gain
HA Hearing Aid(s)
PA Public Address
TF Transfer Function

3 Our approach

3.1 Goals

We aim for a new approach to develop a system that

- works *proactively*: no possibility for howling to occur
- therefore completely eliminates feedback signal $V(z)$
- provides an amount of ASG $\geq$ 'notch filter'-based solutions
- does not affect sound quality

We therefore propose the use of an AFC, inspired by a similar technique which has been developed for amplification of **speech** signals in **hearing aids**.

3.2 Adaptive Feedback Cancellation

To fully estimate the feedback signal $V(z)$, identification of the feedback path TF $F(z)$ is necessary. A model $\hat{F}(z)$ can be obtained with an **adaptive filter**,

- using the loudspeaker signal $U(z)$ as the input,
- using the microphone signal $Y(z) = X(z) + V(z)$ as the desired signal,
- and minimizing the error $E(z) = Y(z) - \hat{F}(z)U(z)$.

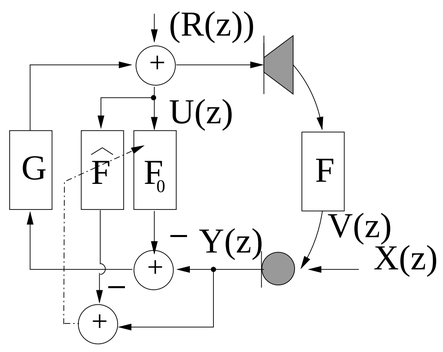

Initial estimate $F_0(z)$ may be replaced during adaptation by a previously obtained estimate $\hat{F}(z)$. Probe signal $R(z)$ may be added to improve identification.

3.3 Signal correlation

3.3.1 When input signal $X(z)$ is non-white, closed-loop identification of $F(z)$ results in a **biased estimate** $\hat{F}(z)$. This problem is due to

- the autocorrelation $R_{uu}(\Delta) = E\{u(k)u(k-\Delta)\}$ of the input signal $U(z)$ to the adaptive filter, which is not an impulse
- the cross-correlation $R_{ux}(\Delta) = E\{u(k)x(k-\Delta)\}$ between $U(z)$ and source signal $X(z)$, which is non-zero

A non-impulslike $R_{uu}(\Delta)$ is encountered in many audio applications, whereas a non-zero $R_{ux}(\Delta)$ follows from the nature of the feedback problem.

3.3.2 Alternatively, a **filtered-X** adaptive algorithm can be used. Consider the source signal $X(z) = H(z)W(z)$ as a filtered white noise signal $W(z)$. Bias can then be avoided by minimizing the filtered error $E(z) = H^{-1}(z)[Y(z) - \hat{F}(z)U(z)]$.

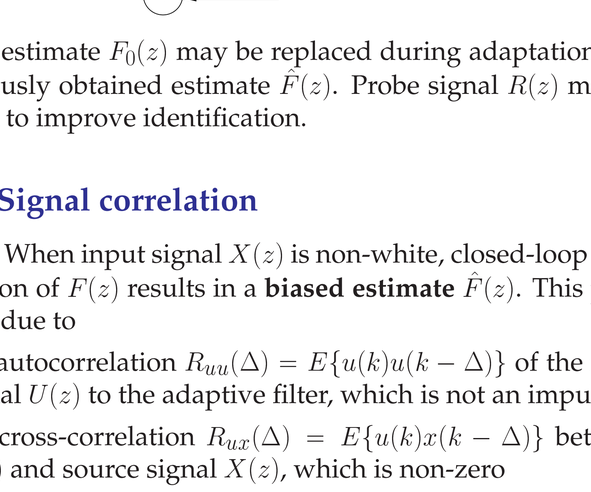

Since noise model $H(z)$ is unknown, both $F(z)$ and $H^{-1}(z)$ have to be estimated in this case.

3.3.3 In either case, $F(z)$ or both $F(z)$ and $H^{-1}(z)$ are not identifiable in closed loop unless

1. a **probe signal** $R(z)$, uncorrelated with $X(z)$, is injected in the loudspeaker signal. Since noise injection reduces sound quality, $R(z)$ may be psychoacoustically masked, making the noise inaudible yet slightly correlated with $X(z)$.
2. appropriate **delays** are introduced in the forward and/or the cancellation path. As for the filtered-X case, $F(z)$ and $H^{-1}(z)$ can be identified in a two-channel identification scheme with a delay d added to the forward path $G(z)$.

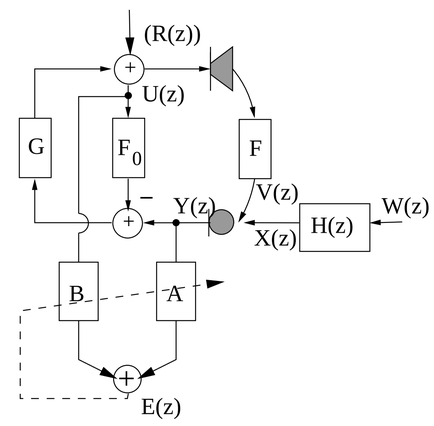

Minimizing $E(z) = B(z)U(z) + A(z)Y(z)$, the desired solution

$$\begin{bmatrix} A(z) \\ B(z) \end{bmatrix} = \begin{bmatrix} H^{-1}(z) \\ -F(z)H^{-1}(z) \end{bmatrix} \text{ is reached if } \begin{cases} N_A \geq N_{H^{-1}} \\ N_B \geq N_{H^{-1}} + N_F \\ d \geq N_A \end{cases}$$

3. some kind of **non-linearity** is included in forward path $G(z)$. Frequency compression/expansion, i.e. shifting frequencies while preserving harmonic relations, is one possibility.

4 Challenges

4.1 Hearing Aid acoustics → Room acoustics

In HA research, an AFC is considered a promising feedback reduction tool. To apply this technique to PA systems, we must consider some acoustic differences that increase complexity.

- Comparing the dimensions of a human ear and a concert hall, the PA feedback path length may be 10^3 times that of a HA. A much **higher adaptive filter order** is thus required, increasing the computation time.
- Sound propagation in a room is characterized by a multitude of reflections. The frequency spectrum of the feedback path TF $F(z)$ therefore shows many peaks and valleys, increasing the required filter order. A typical HA feedback response is in contrast relatively flat.
- Feedback path TF $F(z)$ is generally much more time-varying in a PA system, e.g. due to dynamical microphone positions. A **faster adaptation algorithm** is required to track these variations.

4.2 1-mic/1-speaker → M-mic/L-speaker setup

A PA system typically consists of M microphones and L loudspeakers where $M, L > 1$.

- On one hand, since **M · L feedback paths** have to be modelled, complexity increases spectacularly. Correlations between different microphone and loudspeaker signals may allow a reduction of the identification problem size.
- On the other hand, by adding some feedback paths to the system, the **identification problem** may become easier to solve. A similar approach was found to be succesful when applied to inverse filtering of room acoustics.

4.3 Speech input → Music input signal

Whereas HA research focuses on speech amplification, most of the PA applications involve music signals.

- In signal processing for music signals, sound quality is an important performance measure. The **complete audio bandwidth** $20Hz - 20kHz$ should therefore be used. For many speech applications only intelligibility is of importance, reducing the required bandwidth.
- Music signals tend to have a strong autocorrelation due to the **presence of tonal components**. This worsens the signal correlation problem, e.g. a much longer delay d will have to be introduced in the forward/cancellation path to avoid that tonal components get attenuated or even cancelled.
- In the filtered-X approach the inverse **noise model** $H^{-1}(z)$ has to be estimated. Speech can typically be modelled by relatively low-order autoregressive models. For music signals such straightforward models are hard to obtain.