Adaptive Feedback Cancellation for Audio Signals using a Warped All-Pole Near-End Signal Model

Toon van Waterschoot and Marc Moonen
Katholieke Universiteit Leuven, ESAT-SCD, Kasteelpark Arenberg 10, B-3001 Leuven, Belgium
toon.vanwaterschoot@esat.kuleuven.be *http://homes.esat.kuleuven.be/~tvanwate/*

1 Adaptive Feedback Cancellation

1.1 Acoustic Feedback Problem:

- howling due to closed-loop instability
- excessive reverberation and ringing

1.2 Acoustic Feedback Control:

- notch-filter-based feedback control
- **adaptive feedback cancellation (AFC)**
- ...

1.3 Adaptive Feedback Cancellation:

+ pro-active approach (⇔ reactive)
+ removes howling and reverberation
+ does not affect signal quality
- high computational complexity
- **signal decorrelation required**

1.4 AFC Correlation Problem:

without decorrelation, non-white signals

- cause **bias** in converged estimate $\hat{F}$
- **slow down convergence** due to
  - correlation in near-end signal
  - poor excitation by far-end signal

1.5 AFC Decorrelation:

- decorrelation in signal path ⇒ distortion

- decorrelation in identification path
  - **requires parametric and invertible near-end signal model**
  - speech AFC: all-pole near-end signal model
    - PEM-AF [Spriet '05]
    - PEM-AFROW [Rombouts '06]
  - audio AFC: **Warped PEM-AFROW**

AFC without decorrelation:

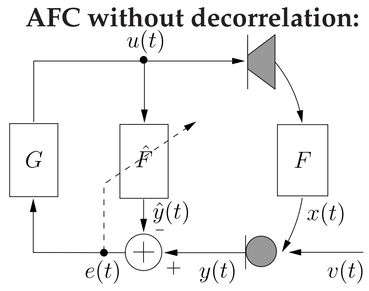

PEM-based AFC:

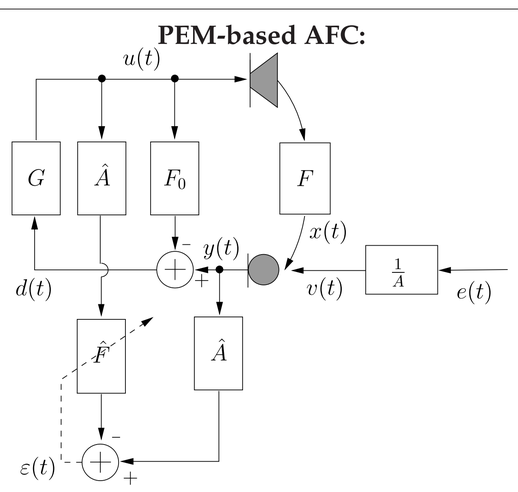

(a) feedback path estimation

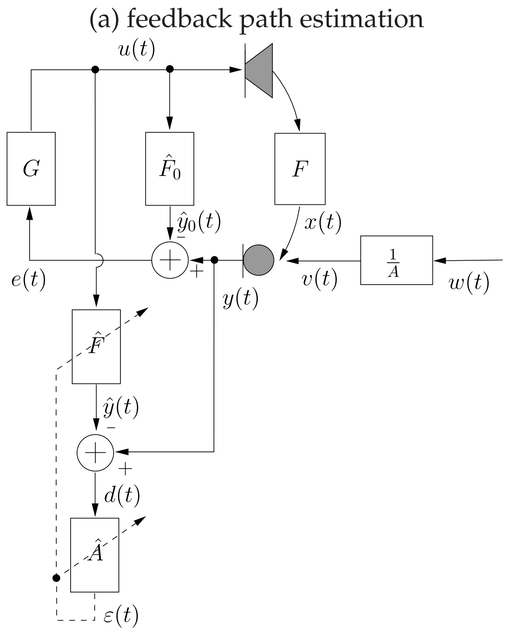

(b) near-end signal model estimation

2 Warped Linear Prediction

A **low-order all-pole model is not suited for audio signals** because most dominating frequency components are in the lower half of the Nyquist interval [van Waterschoot '07]

⇒

Alternative LP Models:

- Pole-Zero Model
- High-Order All-Pole Model
- Pitch Prediction Model
- **Warped All-Pole Model**
- Selective All-Pole Model

Frequency Warping:

$$\begin{cases} z^{-1} \mapsto \tilde{z}^{-1} = \frac{z^{-1}-\lambda}{1-\lambda z^{-1}}, \quad \omega \mapsto \tilde{\omega} = \omega + 2\arctan\left(\frac{\lambda \sin\omega}{1-\lambda\cos\omega}\right) \\ \lambda_{\text{Bark}}(f_s) = 1.0674\sqrt{\frac{2}{\pi}\arctan(0.06583 f_s)} - 0.1916 \text{ [Smith '99]} \end{cases}$$

Conventional LP:

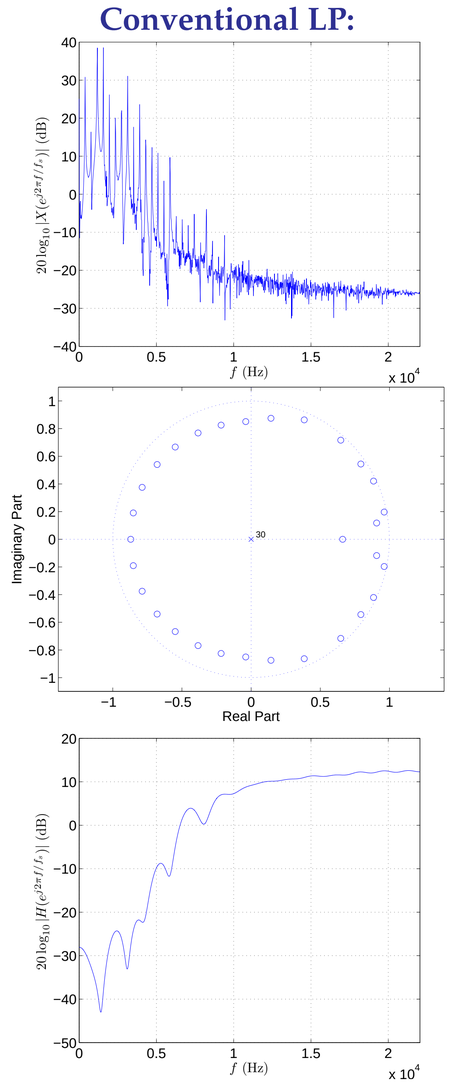

Warped LP:

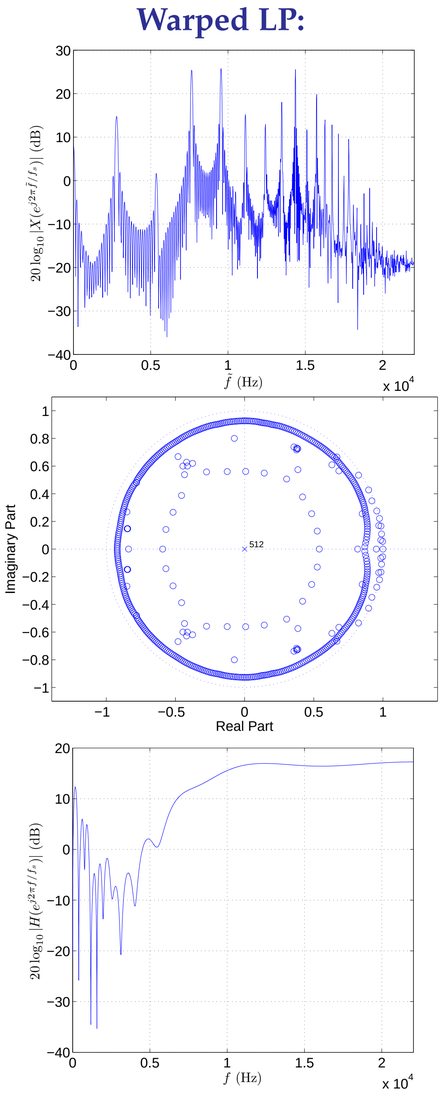

3 Warped PEM-AFROW Algorithm

Steps 1) to 4) are executed only at times t for which $t \bmod P = 0$, Steps 5) to 8) are executed $\forall t$
t is the discrete time index, P is the (W)LP data frame hop size, $j = t \bmod P \in [0, P-1]$

		Complexity comparison (♯ multiplications per iteration) WPEM-AFROW	PEM-AFROW	NLMS
1)	calculation of a priori feedback-compensated signal $\mathbf{d}[t,\hat{\mathbf{f}}(t-1)] = \begin{bmatrix} y(t+P-M) \\ \vdots \\ y(t+P-1) \end{bmatrix} - \begin{bmatrix} u(t+P-M) & \dots & u(t+P-M-n_F) \\ \vdots & \ddots & \vdots \\ u(t+P-1) & \dots & u(t+P-1-n_F) \end{bmatrix} \hat{\mathbf{f}}(t-1)$	$\frac{M(n_F+1)}{P}$	$\frac{M(n_F+1)}{P}$	
2)	(warped) LP of a priori feedback-compensated signal $\{\hat{\mathbf{a}}(t), \sigma_A^2(t)\} = \text{wlp}(\mathbf{d}[t,\hat{\mathbf{f}}(t-1)])$	$\frac{M(2n_A+1)+n_A(n_A+4)}{P}$	$\frac{M(n_A+1)+n_A(n_A+4)}{P}$	
3)	warping of far-end and microphone signal $\begin{cases} \bar{u}(k,\kappa) = D_0^{-1}(q,\lambda)D^{\kappa}(q,\lambda)u(k), & k \in [t, t+P-1],\ \kappa \in [0, n_A] \\ \bar{y}(k,\kappa) = D_0^{-1}(q,\lambda)D^{\kappa}(q,\lambda)y(k), & k \in [t, t+P-1],\ \kappa \in [0, n_A] \end{cases}$	$2(n_A+2)$		
4)	prefiltering of (warped) far-end and microphone signal $\begin{cases} \tilde{u}[k,\hat{\mathbf{a}}(t)] = \bar{u}(k,0) + \begin{bmatrix} \bar{u}(k,1) & \dots & \bar{u}(k,n_A) \end{bmatrix} \hat{\mathbf{a}}(t), & k \in [t+P-M-n_F, t+P-1] \\ \tilde{y}[k,\hat{\mathbf{a}}(t)] = \bar{y}(k,0) + \begin{bmatrix} \bar{y}(k,1) & \dots & \bar{y}(k,n_A) \end{bmatrix} \hat{\mathbf{a}}(t), & k \in [t+P-M, t+P-1] \end{cases}$	$\frac{n_A(2M+n_F)}{P}$	$\frac{n_A(2M+n_F)}{P}$	
5)	calculation of NLMS input vector and prediction error $\begin{cases} \tilde{\mathbf{u}}[t,\hat{\mathbf{a}}(t-j)] = \begin{bmatrix} \tilde{u}[t,\hat{\mathbf{a}}(t-j)] & \dots & \tilde{u}[t-n_F,\hat{\mathbf{a}}(t-j)] \end{bmatrix}^T \\ \varepsilon[t,\hat{\mathbf{a}}(t-j),\hat{\mathbf{f}}(t-1)] = \tilde{y}[t,\hat{\mathbf{a}}(t-j)] - \tilde{\mathbf{u}}^T[t,\hat{\mathbf{a}}(t-j)]\hat{\mathbf{f}}(t-1) \end{cases}$	n_F+1	n_F+1	n_F+1
6)	estimation of prediction error variance $\begin{cases} \sigma_{\varepsilon}^2(t) = \lambda_{\varepsilon}\sigma_{\varepsilon}^2(t) + (1-\lambda_{\varepsilon})\varepsilon^2[t,\hat{\mathbf{a}}(t-j),\hat{\mathbf{f}}(t-1)] \\ \sigma^2(t) = [\sigma_A^2(t-j) + \sigma_{\varepsilon}^2(t)]/2 \end{cases}$	4	4	
7)	NLMS weight update $\hat{\mathbf{f}}(t) = \hat{\mathbf{f}}(t-1) + \mu\frac{\tilde{\mathbf{u}}[t,\hat{\mathbf{a}}(t-j)]\varepsilon[t,\hat{\mathbf{a}}(t-j),\hat{\mathbf{f}}(t-1)]}{\tilde{\mathbf{u}}^T[t,\hat{\mathbf{a}}(t-j)]\tilde{\mathbf{u}}[t,\hat{\mathbf{a}}(t-j)] + \sigma^2(t) + \alpha}$	$2(n_F+2)$	$2(n_F+2)$	$2(n_F+2)$
8)	calculation of a posteriori feedback-compensated signal $d[t,\hat{\mathbf{f}}(t)] = y(t) - \begin{bmatrix} u(t) & \dots & u(t-n_F) \end{bmatrix} \hat{\mathbf{f}}(t)$	n_F+1	n_F+1	n_F+1

Simulation Parameters:

- sampling frequency $f_s = 44100$ Hz
- monophonic audio signal (solo violin)
- feedback path length $n_F + 1 = 4410$ (100 ms)
- (W)LP model order $n_A = 14$
- (W)LP frame length $M = 8192$ (185.8 ms)
- (W)LP frame hop size $P = 1024$ (23.2 ms)
- forward path delay $d = P = 1024$ (23.2 ms)
- forward path gain ⇒ 3 dB gain margin

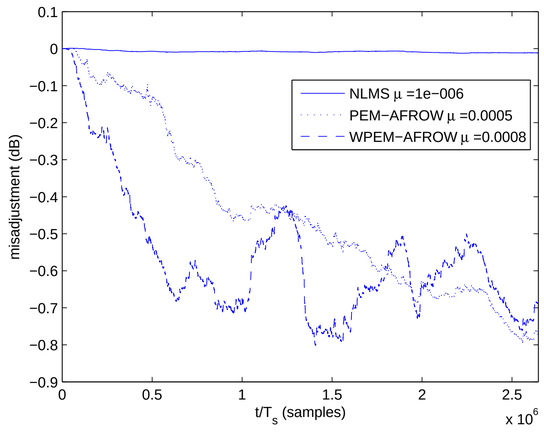

References:

[Spriet '05] A. Spriet, I. Proudler, M. Moonen, and J. Wouters, "Adaptive feedback cancellation in hearing aids with linear prediction of the desired signal," *IEEE Trans. Signal Process.*, vol. 53, no. 10, pp. 3749–3763, Oct. 2005.

[Rombouts '06] G. Rombouts, T. van Waterschoot, K. Struyve, and M. Moonen, "Acoustic feedback suppression for long acoustic paths using a nonstationary source model," *IEEE Trans. Signal Process.*, vol. 54, no. 9, pp. 3426–3434, Sept. 2006.

[van Waterschoot '07] T. van Waterschoot and M. Moonen, "Comparison of linear prediction models for audio signals," *EURASIP J. Audio, Speech, Music Process.*, submitted for publication, Dec. 2007.

[Smith '99] J. O. Smith and J. S. Abel, "Bark and ERB bilinear transforms," *IEEE Trans. Speech Audio Process.*, vol. 7, no. 6, pp. 697–708, Nov. 1999.

Acknowledgements: Toon van Waterschoot is a Research Assistant with the Institute for the Promotion of Innovation through Science and Technology in Flanders (IWT-Vlaanderen). This research work was carried out at the ESAT laboratory of the Katholieke Universiteit Leuven, in the frame of K.U.Leuven Research Council: CoE EF/05/006 Optimization in Engineering, the Belgian Programme on Interuniversity Attraction Poles, initiated by the Belgian Federal Science Policy Office IUAP P6/04 ("Dynamical systems, control and optimization", 2007-2011), the Concerted Research Action GOA-AMBioRICS, and EU/FP7-ICT-2007-1 Project 216785 ("Ultra-wide band real-time interference monitoring and cellular management strategies – UCELLS"). The scientific responsibility is assumed by its authors.