KATHOLIEKE UNIVERSITEIT LEUVEN

EUSIPCO-2008

A First-Order Frequency-Warped Sigma Delta Modulator with Improved Signal-to-Noise Ratio

Ludovico Ausiello

(ARCES, University of Bologna, Italy, lausiello@arces.unibo.it)

Toon van Waterschoot, Marc Moonen

(ESAT-SCD, Katholieke Universiteit Leuven, Belgium,
{tvanwate,moonen}@esat.kuleuven.be)



This research work was carried out at the ESAT laboratory of the Katholieke Universiteit Leuven, in the frame of the Edith Program, the Belgian Programme on Interuniversity Attraction Poles, initiated by the Belgian Federal Science Policy Office IUAP P6/04 (DYSCO, `Dynamical systems, control and optimization', 2007-2011), and EU/FP7-ICT-2007-1 Project 216785 (``Ultra-wide band real-time interference monitoring and cellular management strategies -- UCELLS''), and was supported by the Marie Curie Early Stage Training No. 504125 and the Institute for the Promotion of Innovation through Science and Technology in Flanders (IWT-Vlaanderen). The scientific responsibility is assumed by its authors.



Outline

- Introduction: Sigma Delta Modulation (SDM)
  - A/D conversion
  - SDM structure & mathematical model
  - SDM properties
- Frequency-warped SDM design
  - motivation
  - design procedure
- First-order frequency-warped SDM
  - first-order frequency-warped SDM design
  - SNR analysis
  - simulation results
- Conclusion & Ongoing work



Introduction: SDM (1/3)

- Analog-to-digital (A/D) conversion

traditional A/D conversion = Nyquist sampling + multi-bit quantization

oversampling: spreading the quantization noise power in a larger frequency range

noise shaping: pushing the quantization noise into high-frequency range

SDM A/D conversion = oversampling + noise shaping + 1-bit/multi-bit quantization

- Key SDM advantages
  - high resolution (quantified as signal-to-quantization noise ratio)
  - relatively low-precision hardware required

Introduction: SDM (2/3)

- SDM structure:

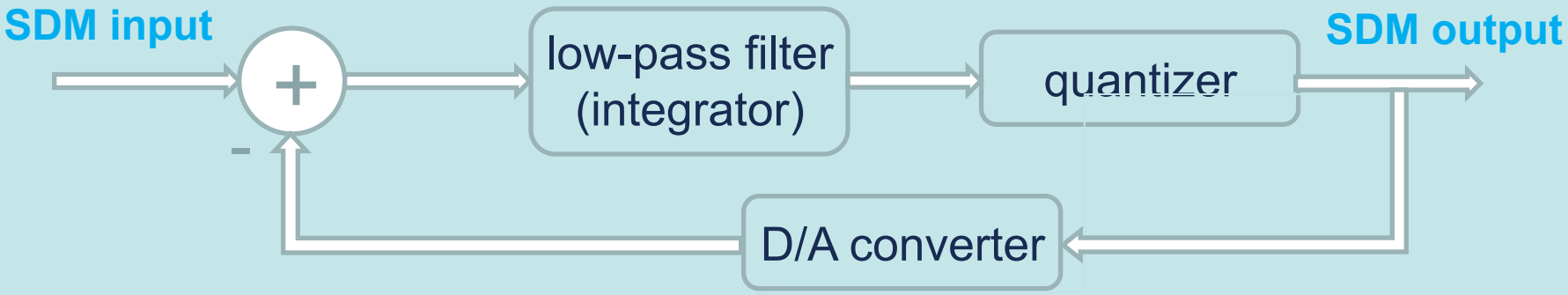

- SDM mathematical model: $V(z) = G(z)U(z) + H(z)E(z)$
  STF NTF

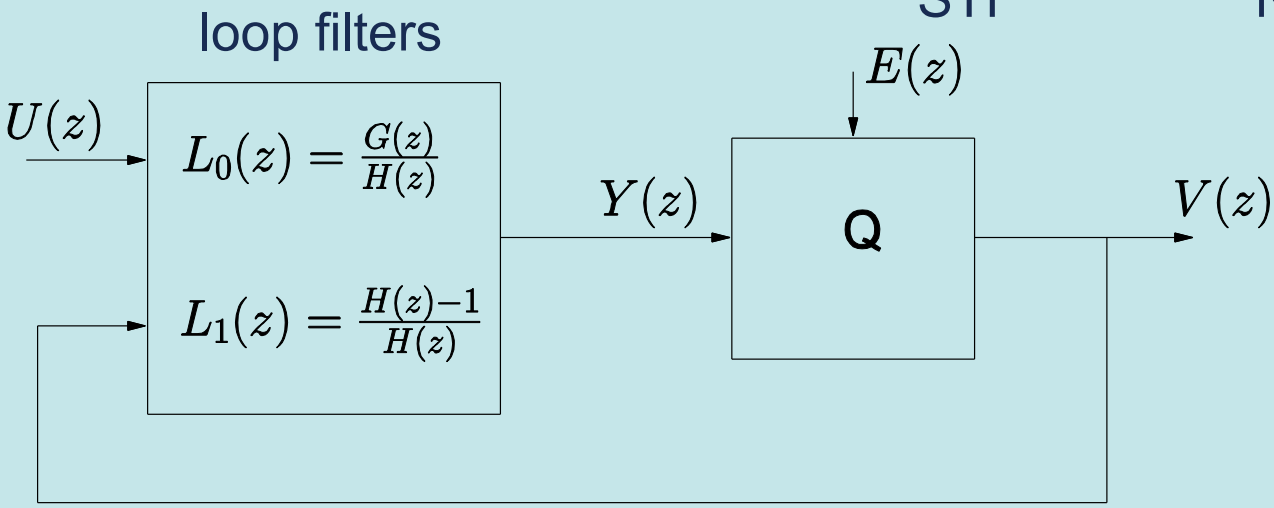



Introduction: SDM (3/3)

- SDM properties
  - first-order vs. high-order modulator filters
    - first-order filters tend to have better **stability** properties
    - first-order filters are very easy to **design**
    - high-order filters allow for a more selective **noise shaping**
    - high-order filters can achieve similar SNR at reduced OSR, hence paving the way for **wideband** applications (e.g., video coding)
  - 1-bit vs. multi-bit
    - feedback loop DAC is perfectly **linear** in 1-bit case
    - SDM filter **hardware** is simpler in 1-bit case
    - multi-bit SDM can achieve better **resolution** at same OSR
    - linearized SDM **model** is more accurate in multi-bit case

We will only consider first-order 1-bit oversampling SDM



Frequency-warped SDM (1/2)

- Motivation
  - incorporate psychoacoustics in audio conversion SDM design
    - if the SDM low-pass filter is preceded by a frequency-warping operation, and the warping parameter is properly chosen (>0), then a better **frequency resolution** in the audio signal band is obtained
    - previous approaches to psychoacoustic SDM design are based on fixed/adaptive **psychoacoustic models** with high-order SDM filters, see [Dunn and Sandler, 1997] and [De Koning and Verhelst, 2003]
  - increase SNR performance while avoiding stability issues typical to high-order SDM
    - frequency-warped SDM can be designed to provide a **boost in the signal band** without amplifying the quantization noise
    - frequency-warped SDM tend to have a **lower out-of-band gain** (= NTF magnitude response at Nyquist frequency) for positive warping parameters, which is beneficial to SDM stability



Frequency-warped SDM (2/2)

- Design procedure:

Step 1: design a non-warped NTF using any traditional method

↓

Step 2: calculate the warped NTF using the bilinear all-pass transform

↓

Step 3: scale the warped NTF such that it has a monic impulse response

↓

Step 4: decide in which way the warping should affect the STF

↓

Step 5: evaluate the warped NTF and STF & choose the warping parameter



First-order warped SDM (1/6)

- Design procedure:
  - Step 1: design a non-warped NTF using any traditional method

$$H(z) = 1 - z^{-1}$$ (pure differentiator)

  - Step 2: calculate warped NTF using bilinear all-pass transform

$$z^{-1} \mapsto \frac{z^{-1} - \lambda}{1 - \lambda z^{-1}} \Rightarrow H(z,\lambda) = \frac{(1+\lambda)(1 - z^{-1})}{1 - \lambda z^{-1}}$$

  - Step 3: scale warped NTF to have monic impulse response

$$\widetilde{H}(z,\lambda) = \frac{1 - z^{-1}}{1 - \lambda z^{-1}}$$

The corresponding warped L1 loop filter is

$$\widetilde{L}_1(z,\lambda) = \frac{\widetilde{H}(z,\lambda) - 1}{\widetilde{H}(z,\lambda)} = -(1-\lambda)\frac{z^{-1}}{1 - \lambda z^{-1}}$$

First-order warped SDM (2/6)

- Design procedure:
  - Step 4: decide in which way the warping should affect the STF
    - constrain warped L0 loop filter to be equal to non-warped L0 loop filter

$$\widetilde{L}_0(z,\lambda) = L_0(z) = \frac{z^{-1}}{1-z^{-1}} \Leftrightarrow \widetilde{G}(z,\lambda) = \frac{z^{-1}}{1-\lambda z^{-1}}$$

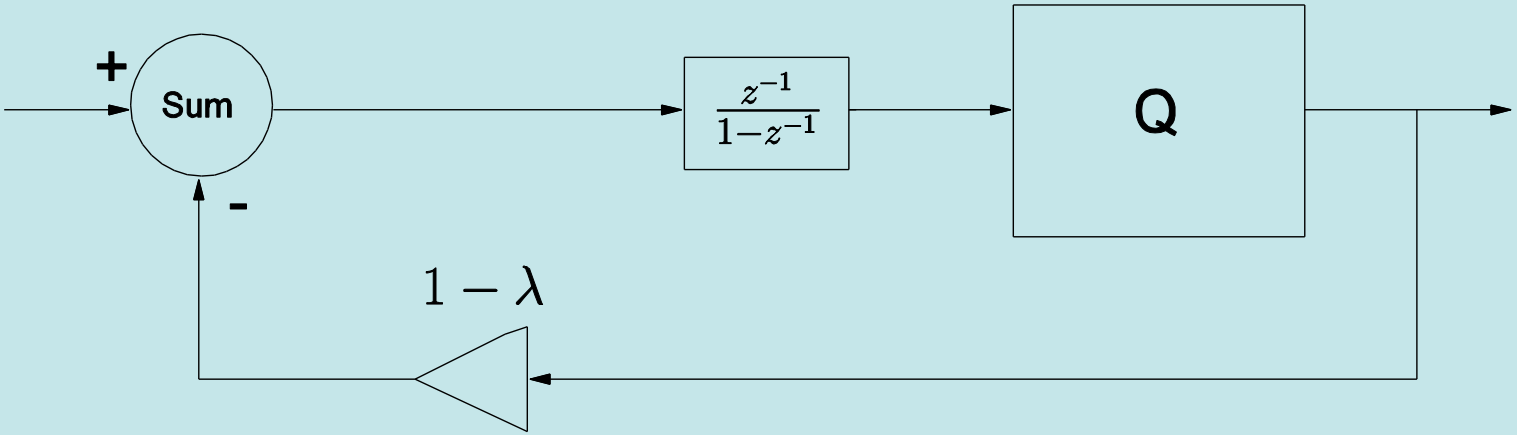



First-order warped SDM (3/6)

- Design procedure:
  - Step 5: evaluate warped NTF/STF & choose warping parameter

positive λ → out-of-band gain decreases

negative λ → out-of-band gain increases

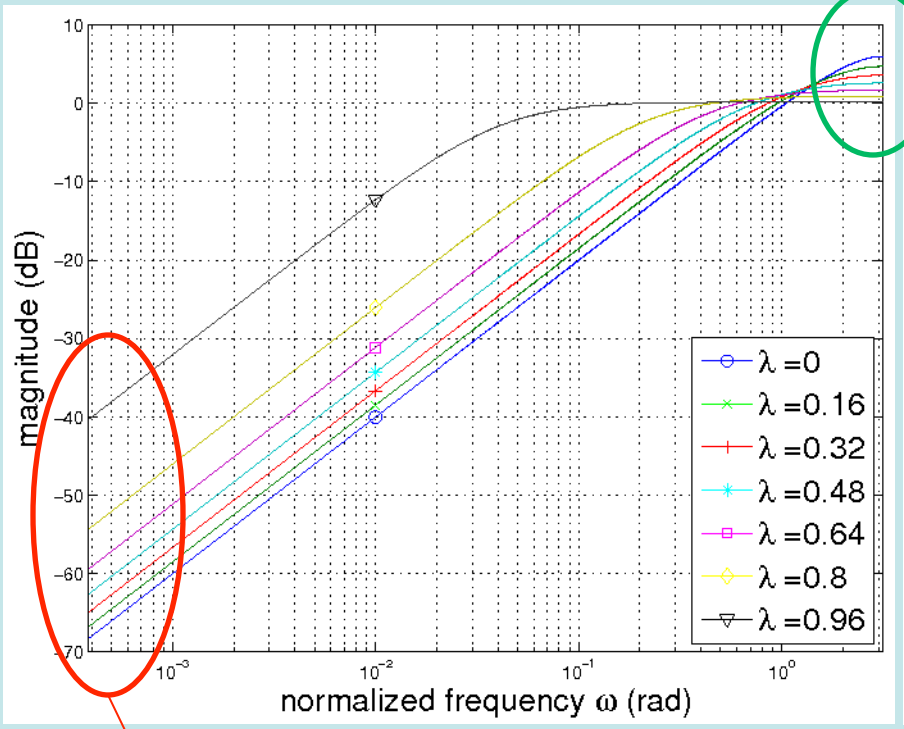

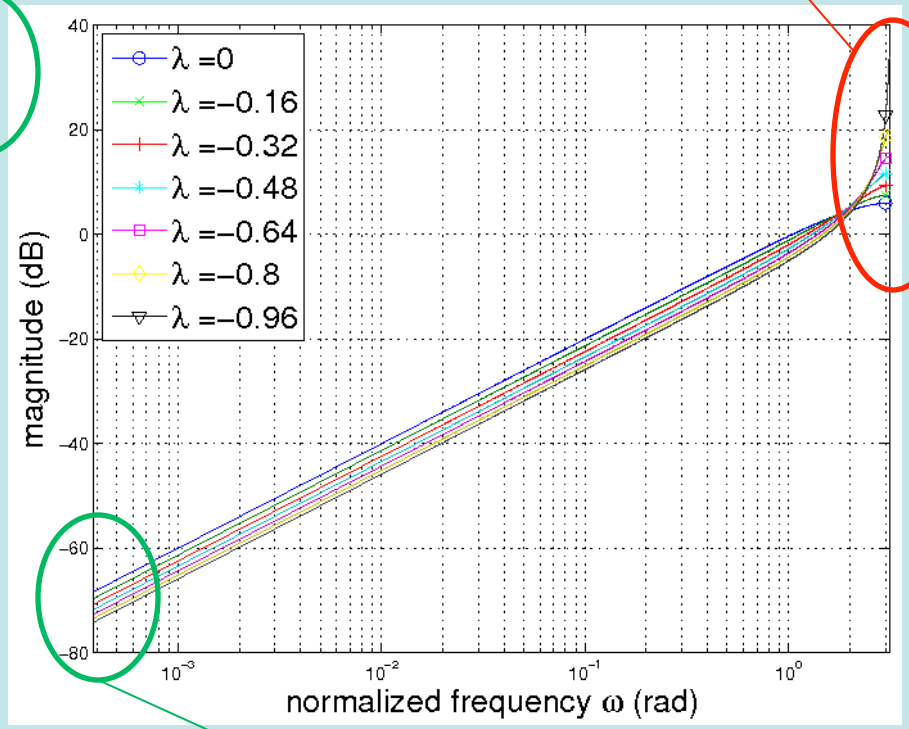

positive λ → noise power in signal band increases

negative λ → noise power in signal band decreases

First-order warped SDM (4/6)

- Design procedure:
  - Step 5: evaluate warped NTF/STF & choose warping parameter

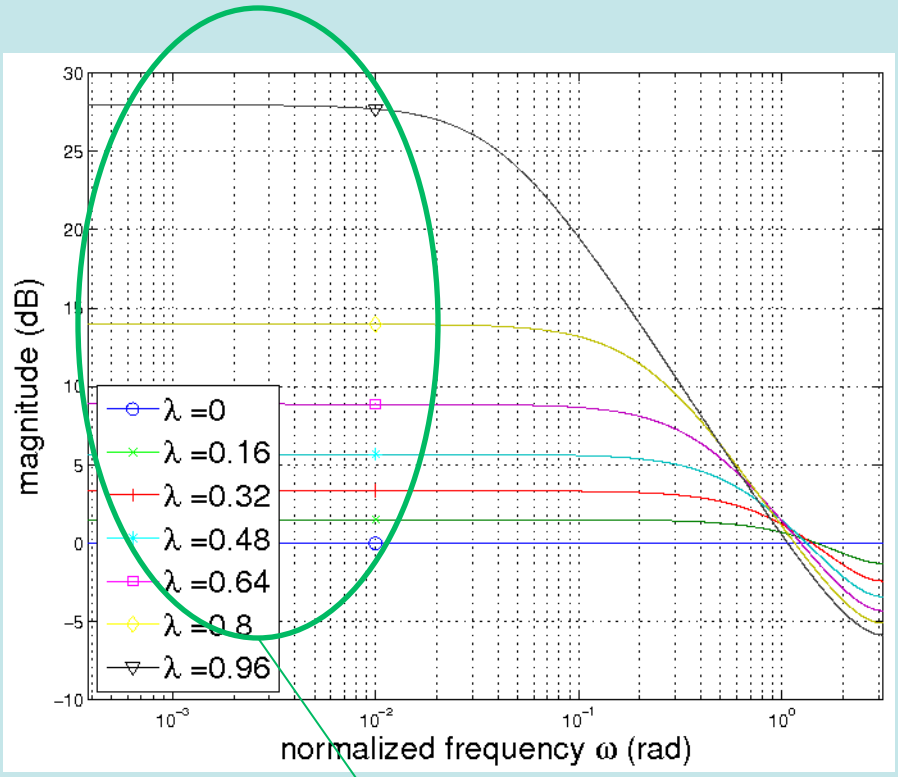

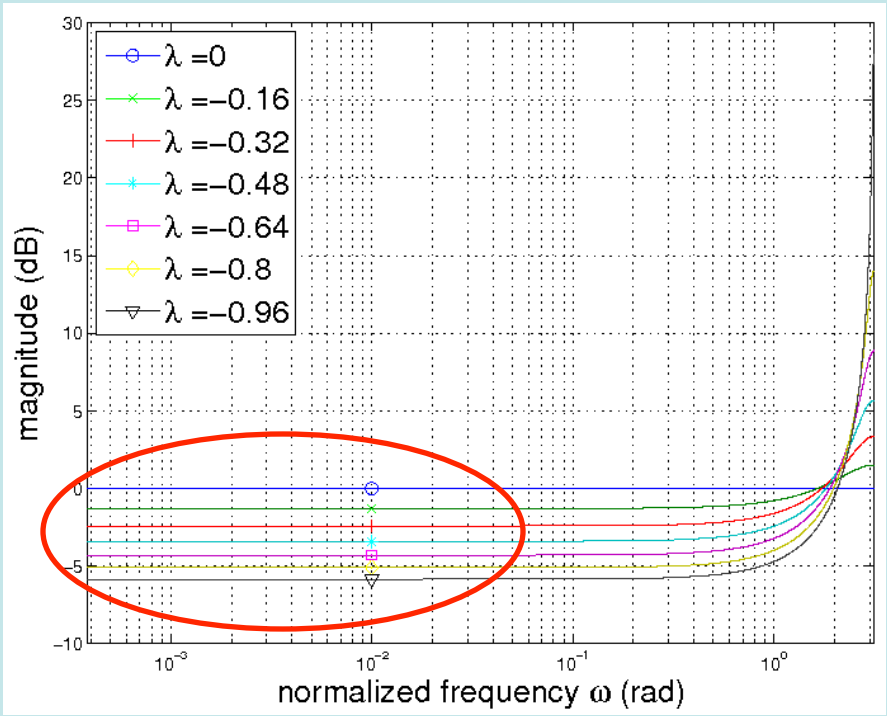

positive λ → signal power increases to (over)compensate noise power increase



First-order warped SDM (5/6)

- SNR analysis:
  - predicted SNR

$$\mathrm{SNR} = 10\log_{10}\frac{\sigma_{xv}^2}{\sigma_{ev}^2}$$

for white noise (WN) and sinusoidal (SIN) input signals

  - most promising configuration:

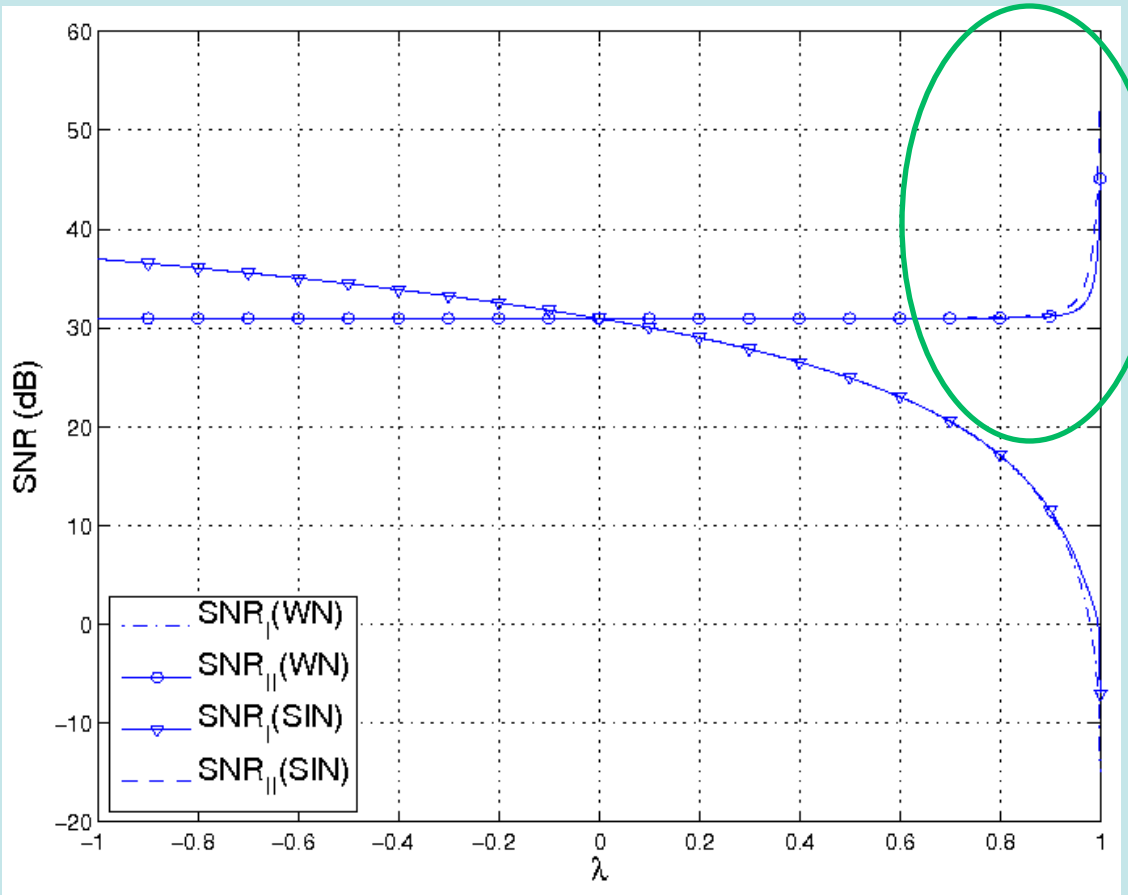

Topology II with λ→1

(also provides optimal out-of-band gain)

First-order warped SDM (6/6)

- Simulation results:
  - input = 1kHz sinusoid
  - signal band = 24kHz
  - OSR = 64
  - topology II
  - $0<\lambda<1$
  - optimal $\lambda=0.45$:
    - stable SDM
    - SNR increase = 6dB
  - Remarks:
    - not every positive value of λ results in a stable SDM
    - discrepancy between simulated SNR and predicted SNR is mainly due to white quantization noise assumption in SNR analysis

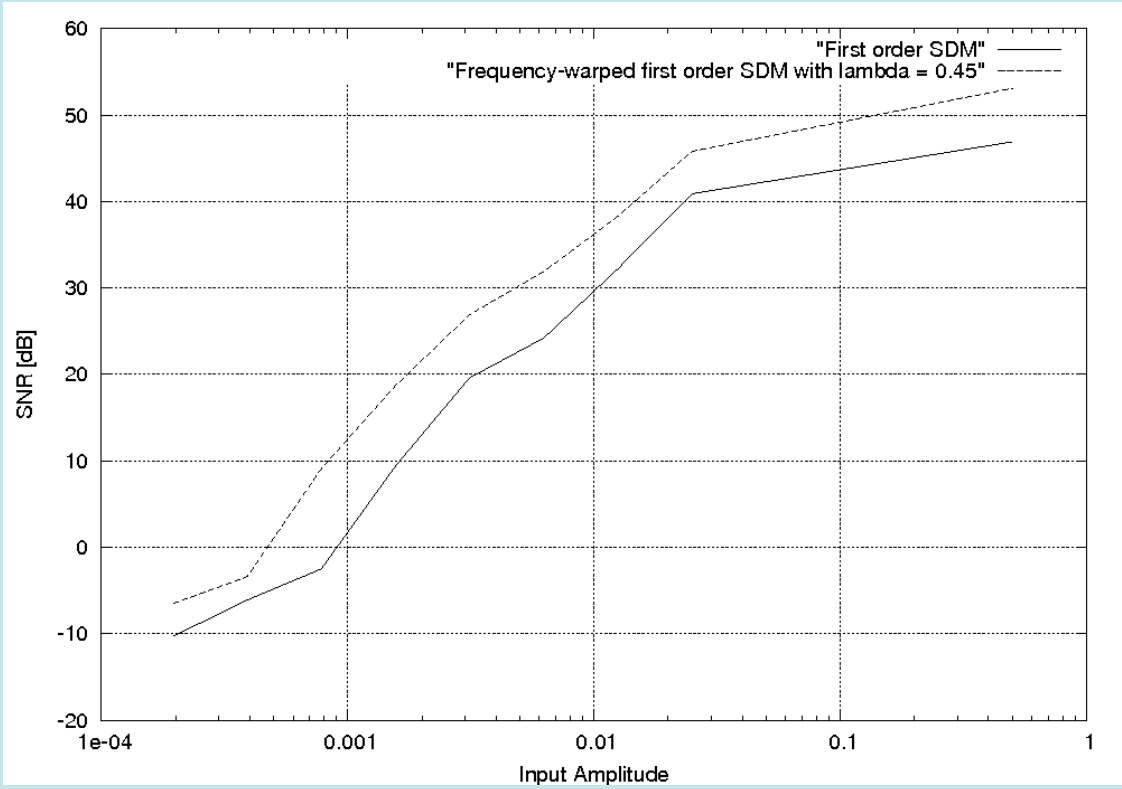



Conclusion & Ongoing work

- A procedure has been proposed for designing frequency-warped SDM, with the aim of
  - increasing the SDM resolution (in terms of SNR)
  - increasing the SDM stability (in terms of out-of-band gain)
- In the first-order case, the frequency-warped SDM design
  - requires little additional hardware
  - may lead to a stable 6dB SNR increase, provided the warping parameter is properly chosen
  - provides a framework that can be extended to high-order frequency-warped SDM design*
- SNR analysis and simulation results both confirm that combining a warping parameter $\lambda>0$ with a $(1-\lambda)$ scaling in the feedback loop is most promising in terms of SNR

*L. Ausiello, T. van Waterschoot, and M. Moonen, “Design and evaluation of frequency-warped sigma delta modulators”, IEEE Trans. Signal Process., submitted for publication, Apr. 2008. [Online]. Available: ftp://ftp.esat.kuleuven.be/pub/sista/vanwaterschoot/abstracts/07-190.html