KU LEUVEN

STADIUS
Center for Dynamical Systems, Signal Processing and Data Analytics

Citation/Reference	Suárez León A.A., Goovaerts G., Varon C., Vázquez Seisdedos C.R., Van Huffel S., (2017), **Irregular Heartbeats Detection Using Sequentially Truncated Multi-Linear Singular Value Decomposition** 44th annual Computing in Cardiology Conference
Archived version	Author manuscript: the content is identical to the content of the published paper, but without the final typesetting by the publisher
Published version	https://www.cinc2017.org/scientific-program
Journal homepage	https://www.cinc2017.org/
Author contact	Carolina.varon@esat.kuleuven.be +32 16326417
IR	NA

(article begins on next page)

Irregular Heartbeat Detection Using Sequentially Truncated Multilinear Singular Value Decomposition

Alexander A. Suárez-León[1,2], Carolina Varon[2,3], Griet Goovaerts[2,3], Carlos R. Vázquez-Seisdedos[1], Sabine Van Huffel[2,3]

[1]Universidad de Oriente, Santiago de Cuba, Cuba
[2] KU Leuven, Department of Electrical Engineering (ESAT), STADIUS Center for Dynamical Systems, Signal Processing and Data Analytics, Leuven, Belgium
[3] Imec, Leuven, Belgium

Abstract

This paper presents a novel approach for detecting irregular heartbeats using tensor approximation and Least Squares - Support Vector Machines (LS-SVM).Once the signal is filtered and normalized, a third order tensor was constructed for each record of the dataset. Next, a Sequentially Truncated Multilinear Singular Value Decomposition (ST-MLSVD) was applied and the mode-3 matrix was used as input features for an LS-SVM. Then, Active Prototype Vector (APV) selection strategy was performed for selecting 5% of the data for training. The LS-SVM hyper-parameters tuning was carried out using a combination of Coupled Simulated Annealing and the simplex method. Two databases were used for the performance evaluation. This evaluation resulted in sensitivities, positive predictive values and specificities all above 93%. These results are an improvement on previously reported results for tensor-based irregular heartbeat detection systems.

1. Introduction

Heart diseases are considered the major cause of death worldwide [1]. One method to assess the overall structure and function of the heart is the electrocardiogram (ECG). The ECG is the expression of the electrical activity of the heart on the chest. Nowadays, it is one of the most extended tests in clinical practice. The Heart Rate Variability (HRV) analysis is an ECG-based tool for the study and prognosis of heart diseases. Although the HRV in ambulatory ECG can reveal significant diagnostic information, it is crucial as a pre-processing stage, to remove any heartbeat that does not start in the sinoatrial(SA) node [2]. The inclusion of such heartbeats can have a negative impact on the diagnostic value of the HRV analysis. For instance, the inclusion of only one ectopic heartbeat may completely affect the standard deviation of the normal to normal (NN) interval (SDNN) [2]. Therefore, it is essential to encourage the research on new high precision (sensitivity) methods for detecting irregular heartbeats in order to ensure no bias in the HRV outcome.

This study addresses the problem of detecting the irregular heartbeats in multi-lead ambulatory recordings using tensor approximation and Least Squares Support Vector Machines (LS-SVM).

2. Materials and Methods

The general diagram for detecting the irregular heartbeats is depicted in figure 1a. The method is applied to each record in the dataset. The approach can be divided into five general stages that include: pre-processing, feature extraction, training set selection, tuning of the LS-SVM hyper-parameters, and the training and testing of the binary classifier. The next sections explain in detail these stages.

2.1. Dataset

The performance evaluation of the algorithm proposed in this study has been carried out using two databases. On the one hand, the database from St.-Petersburg Institute of Cardiological Technics 12-lead Arrhythmia Database (INCARTDB), and on the other hand, the Massachusetts Institute of Technology - Beth Israel Hospital Arrhythmia database (MITDB) [3]-[4]. INCARTDB consists of 75 annotated recordings extracted from 32 Holter records. Each record is 30 minutes long and contains the 12 standard leads. The sampling frequency is 257 Hz. MITDB consists of 48 30-min two-lead Holter recordings sampled at 360 Hz.Using two databases allows assessing the performance of the algorithm with different datasets.

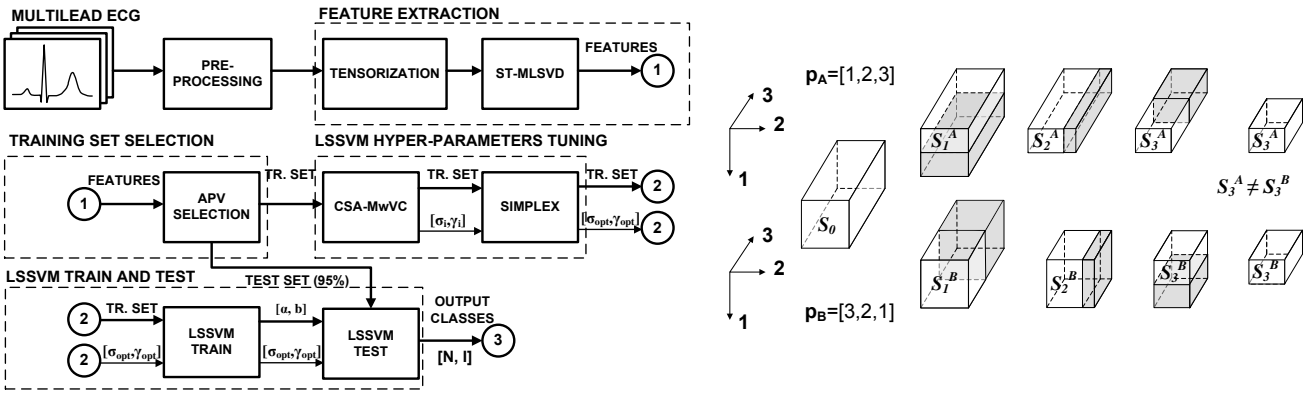

(a) (b)

Figure 1. (a) Method for detecting irregular heartbeats (b) Sequentially Truncated – Multilinear Singular Value Decomposition (ST-MLSVD).

2.1. Pre-processing

The pre-processing stage uses a fourth order zero-phase band-pass Butterworth filter to deal with both, baseline wandering and high frequency noise. The cut-off frequencies are 0.5 Hz and 40 Hz for high-pass and low-pass respectively. This frequency interval corresponds to the power spectrum of the diagnostic ECG.

The segmentation of the ECG produces fixed length vectors. The method consists of truncating the signal using a rectangular asymmetric window around the R-peak. The segmentation splits up the signal using a window length of ~510 ms which starts ~195 ms before the R-peak and ends ~315 ms after. Since annotated signals are used, the R-peaks locations are previously known. This assures that the results do not depend on the R-peak detection method. Given the sample frequencies, the window length for the INCARTDB is 131 samples whereas for MITDB it is 184 samples.

Finally, each heartbeat is normalized subtracting the sample mean and dividing by the standard deviation in all leads.

2.2. Feature extraction

In a multi-lead ECG, each heartbeat is represented by an $L \times W$ matrix, where L is the number of leads and W is the length of the segmented heartbeat. The feature extraction stage extracts feature vectors using a tensor approach. First, a *tensorization* stage takes place. The *tensorization* maps the set of $L \times W$ matrices to a third order tensor where each heartbeat (matrix) is stacked as frontal slices one after the other. This results in a third order tensor, $T \in \Re^{L \times W \times N}$, where N is the number of heartbeats in the record. Once the tensor has been constructed, a low-rank approximation to this tensor is obtained by Sequentially Truncated Multilinear Singular Value Decomposition (ST-MLSVD).

ST-MLSVD [5] is a method for reducing a tensor $T \in \Re^{n_1 \times n_2 \times \ldots \times n_d}$ to a lower multilinear rank tensor $\hat{T}_p \in \Re^{r_1 \times r_2 \times \ldots \times r_d}$ as follows,

$$T \approx \left(\hat{U}_1, \hat{U}_2, \ldots, \hat{U}_d\right) \cdot \hat{S} = \hat{T}_p \in \Re^{n_1 \times n_2 \times \ldots \times n_d}, \quad (1)$$

where $\hat{U}_k \in \Re^{n_k \times r_k}$ are factor matrices with orthonormal columns, $\hat{S} \in \Re^{r_1 \times r_2 \times \ldots \times r_d}$ is the truncated core tensor, d is the number of dimensions and p is the processing order. ST-MLSVD computes a sequence of approximations, $\hat{S}_0, \hat{S}_1, \ldots, \hat{S}_d$, such that the multilinear rank of $\hat{S}_k$ equals, in the first k modes, the desired dimension of the corresponding vector space. Let p, any permutation of the first d numbers, $i = [1,2,\ldots,d]$ and $k=p(i)$, such approximations are obtained in two steps, (1) the truncated Singular Value Decomposition (SVD) of the mode-k vector space is computed and (2) the energy in the tensor is re-ordered by projecting onto the span of the matrix of left singular vectors $\hat{U}_k \in \Re^{n_k \times r_k}$, where n_k is the mode-k dimension and r_k is the desired rank in the current mode. This process is repeated d times. It is noticeable that given the same core size, two different processing orders will yield different core tensors, see figure 1b.

Here, this approximation is used to extract features for the training of the classifier. Given the definition and d=3, there are two parameters to adjust, the multilinear rank of the approximation R= (r_1, r_2, r_3) and the processing order p. Unfortunately, there are no general criteria for setting these parameters. Below, a heuristic approach is used for selecting both of them.

Since there are two different databases, the dimensions of the generated tensors will be different. On one hand, the 12-lead INCARTDB generates tensors of dimension $12 \times 131 \times N$. On the other hand, MITDB generates tensors of dimension $2 \times 184 \times N$, where N is the number of

heartbeats in the current record for each database. The first criterion adopted is that independently of the generated tensor dimensions, the core tensor size is the same for both databases. The second criterion is to keep the multilinear rank as small as possible in order to increase the speed of the feature extraction stage. Since ST-MLSVD is based on truncated SVD, the number of singular values to compute depends on the multilinear rank. Consequently, the algorithm will run faster as the desired multilinear rank decreases.

Thus, the first rank is (r_1 = 2) because it is the minimum of (2, 12). Following the speed criterion, the second rank is r_2= 2. The r_3 value is upper-bounded by the previous two modes, i.e., r_3 = [1, $r_1 r_2$]. Considering that the third mode corresponds to the heartbeat dimension, it may be advisable to keep the maximum information possible. Therefore, the r_3 value is r_3=4.

In absence of any other information, it is recommended to select the processing order in the direction of increasing values of the mode size [5]. Thus, the processing order is p = [1, 2, 3] due to the fact that for both databases $L<W<N$. Such approach minimizes the number of operations to perform and consequently speeds up the feature extraction stage. The feature vectors were obtained directly from the mode-3 factor matrix, $\hat{U}_3 \in \Re^{N\times 4}$ of the ST-MLSVD approximation

2.4. Training set selection and LS-SVM

The vectors for training are automatically selected using the Active Prototype Vector (APV) selection algorithm [6]. This procedure searches for prototype vectors (PV) that maximize the quadratic Rényi entropy. This study uses the Information Potential estimator which is calculated by kernel density estimation methods [6].

The training set size is fixed beforehand to 5% of the total number of heartbeats in the recording. Using small training set sizes is crucial because from the point of view of a practical implementation, the training set should be manually annotated by the cardiologist. Therefore, as the training set size increases, the effort in manually annotating it increases as well.

The LS-SVM dual model solution for a Gaussian kernel requires the adjustment of two hyper-parameters, the regularization parameter (γ) and the kernel parameter (σ). In this study, a combination of Coupled Simulated Annealing (CSA) and the standard Nelder-Mead *simplex* method is used to find optimal values for the pair (σ,γ) [8].First, CSA searches for suitable starting values of these parameters. Then, the *simplex* method is used in a refinement stage.

CSA consists of a set of Simulated Annealing (SA) processes coupled to each other by a term in the acceptance probability function. There are several approaches to CSA[9]. Here, the CSA-Modified with Variance Control (CSA-MwVC) [9] is used. It defines the following acceptance probability function,

$$A_\Theta(\xi, x_i \to y_i) = (1/\xi)\cdot \exp\left(\hat{E}(x_i)/T_{ac}^k\right), \qquad (3)$$

where x_i is the current state, Θ is the set of current states $x_i \in \Theta$, y_i is the probing state and ξ is the coupling term which is a function that depends on the energies of the elements in Θ,

$$\xi = \sum_{x_i \in \Theta} \exp\left(\hat{E}(x_i)/T_{ac}^k\right). \qquad (4)$$

In both expressions $\hat{E}(x_i)$ is defined as,

$$\hat{E}(x_i) = E(x_i) - \max_{\forall x_i \in \Theta}(E(x_i)). \qquad (5)$$

The acceptance temperature schedule in CSA-MwVC is replaced by a variance control using the following rule,

$$T_{ac}^k = \begin{cases} T_{ac}^{k-1}(1-\upsilon), \sigma^2 < \sigma_D^2 \\ T_{ac}^{k-1}(1+\upsilon), \sigma^2 > \sigma_D^2 \end{cases}, \qquad (6)$$

where υ is the rate of increase or decrease of the acceptance temperature and σ_D^2 is the desired variance of the process which can be computed as,

$$\sigma_D^2 = \hat{\sigma}^2\left((m-1)/m^2\right), \qquad (7)$$

where $\hat{\sigma}^2$ is a suitable value of the variance and m is the number of coupled SA processes. This study uses both, the CSA-MwVC and the *simplex* method included in the LS-SVMlabToolbox [8]. The default parameters are $\hat{\sigma}^2 = 0.995$, $m = 5$ and $\upsilon = 0.1$. The cost function is the misclassification rate in an L-fold (L=10) cross validation.

3. Results and discussion

Tables 1 and 2 show the performance indexes for both databases using the test dataset (95%). The included metrics are the sensitivity (Se), specificity (Sp), the positive predictive value (P+) and the global accuracy (Acc). Furthermore, Table 1 compares the results of previous tensor-based algorithms with the current study.

Table 1. Global performance indexes for INCARTDB.

Study	**Se (%)**	**Sp (%)**	**P+(%)**	**Acc (%)**
[9]	91.10	94.47	NR	NR
[10]	93.90	97.70	85.72	97.22
[*]	94.39	99.65	97.81	98.91

[*] This study, NR: Not Reported

Table 2. Global performance indexes for MITDB.

Se (%)	**Sp (%)**	**P+ (%)**	**Acc (%)**
96.27	99.55	99.03	98.49

The algorithm in [9] is an unsupervised approach, i.e., no training set is needed. This is a relevant advantage with respect to the supervised approach proposed here. However, in this study, the training set is small (5%). Therefore, a little additional effort in manually annotating the training set is required for better performance indexes.

From Table 1, it is clear that the performance indexes of this study are better than the ones reported in [10]. The largest difference is in the predictive positive value which has improved with 12%. However, it is possible to argue that the training set size in [10] (2%) is smaller than in the current study (5%). Thus, the observed differences might be the consequence of a larger training set. However, the main advantage of the current study with respect to [10] is that the training set selection is fully automatic. While the method in [10] assumes previous knowledge of the classes' distribution in the record, in practice, this is a difficult issue because in general, the cardiologist does not know in advance such distribution. It is worth to mention that despite the fact that ST-MLSVD has more parameters to adjust than the alternative proposed in [10], the heuristic approach adopted here is effective and yielded good results.

Finally, the performance of the same approach in different datasets can be examined. From Tables 1, 2 the major difference is in the sensitivity, the other indexes are almost the same. One possible cause is that in the case of tensors from MITDB, the mode-1 size is the same for both, the original and the multilinear approximation core tensor. The latter means that no information is discarded in the first truncation. Thus, this could lead to an improvement in the sensitivity value. Notwithstanding, a further study with more focus on this point is therefore suggested.

4. Conclusions

The main contributions of this study are in (1) the use of the ST-MLSVD for extracting features in multi-lead ECG, (2) the use of CSA and *simplex* methods for tuning the LS-SVM hyper-parameter and (3) the automatic training set selection process using APV that led to compact and relevant training sets. Furthermore, the performance assessment showed that with such small training sets it is possible to train high precision classifiers for detecting irregular heartbeats.

Despite the proposed algorithm was evaluated on two databases with a different number of leads and sampling frequencies, almost the same results were obtained for both cases. This demonstrates that the method produces good results even for very different datasets.

Acknowledgements

This work has been supported by the Belgian Development Cooperation through VLIR-UOS (Flemish Interuniversity Council-University Cooperation for Development) in the context of the Institutional University Cooperation programme with Universidad de Oriente. The research leading to these results has received funding from the European Research Council under the European Union's Seventh Framework Programme (FP7/2007-2013) / ERC Advanced Grant: BIOTENSORS (n°339804). This paper reflects only the authors' views and the Union is not liable for any use that may be made of the contained information.

References

[1] WHO. (2017, January) The top 10 cause of death. WHO. [Online].In:http://www.who.int/mediacentre/factsheets/fs310/en/e.

[2] Malik M, Bigger JT, Camm J, Kleiger RE, Malliani A, Moss AJ, Schwartz PJ. Guidelines: Heart rate variability standards of measurement, physiological interpretation, and clinical use. European Heart Journal, 1996; 17, 354-381.

[3] Moody GB, Mark RG. The impact of the MIT-BIH Arrhythmia Database. IEEE Eng in Med and Biol, 2001; 20(3):45-50.

[4] Goldberger AL, Amaral L, Glass L, Hausdorff JM, Ivanov PCh, Mark RG, Mietus JE, Moody GB, Peng C-K, Stanley HE. Physiobank, physiotoolkit, and physionet components of a new research resource for complex physiologic signals. Circulation, 2000; 101(23):e215–e220.

[5] Vannieuwenhoven N, Vandebril R, Meerbergen K. A new truncation strategy for the higher-order singular value decomposition. SIAM Journal Sci. Comput, 2012; 34(2), A1027–A1052.

[6] De Brabanter K, Suykens JAK, De Moor B, Optimized fixed-size kernel models for large data sets. Computational Statistics & Data Analysis, 2010; 54(6), 1484–1504.

[7] Pelckmans K, Suykens JAK, Van Gestel T, De Brabanter J, Lukas L, Hamers B, De Moor B, Vandewalle J. LS-SVMLab: a MATLAB/C toolbox for least squares support vector machines. Tutorial. KULeuven-ESAT. Leuven, Belgium, 2002.

[8] Xavier-de-Souza S, Suykens JAK, Vandewalle J, Bollé D. Coupled Simulated Annealing, IEEE Trans. On Systems, Man, And Cybernetics—Part B: Cybernetics, 2010; 40(2), 320-335

[9] Goovaerts G, De Wel O, Vandenberk B, Willems R, Van Huffel S. Detection of irregular heartbeats using tensors. Computing in Cardiology 2015;42:573-576.

[10] Suárez-León AA, Goovaerts G, Vázquez-Seisdedos CR, Van Huffel S, Irregular heartbeats detection using tensors and Support Vector Machines. Computing in Cardiology 2016;43:1037-1040.

Address for correspondence.

Alexander Alexeis Suárez León
Biomedical Engineering Department, Universidad de Oriente, Ave. Las Américas y Casero,90400, Santiago de Cuba, Cuba.
aasl@uo.edu.cu