Errata for

Max-Algebraic System Theory for Discrete Event Systems

(as of June 19, 1999)

Bart De Schutter

1 List of errata

p. 6 Line -12: The equation number "(1.5)" at the end of this line should be removed.

p. 24 Line -18: "to only" should be replaced by "the only".

p. 37 Line 7: "$Ax = b$" should be replaced by "$A \otimes x = b$".

p. 42 Line 8: "$\mathbb{R}_{\max}$ is not a group" should be replaced by "$(\mathbb{R}_\varepsilon, \oplus)$ is not a group".

p. 57 Figure 3.2
Change the upper part of the dotted line that represents the intersection of G_α and G_δ by a full line.
Change the upper part of the dotted line that indicates the intersection of G_δ and G_γ by a full line.

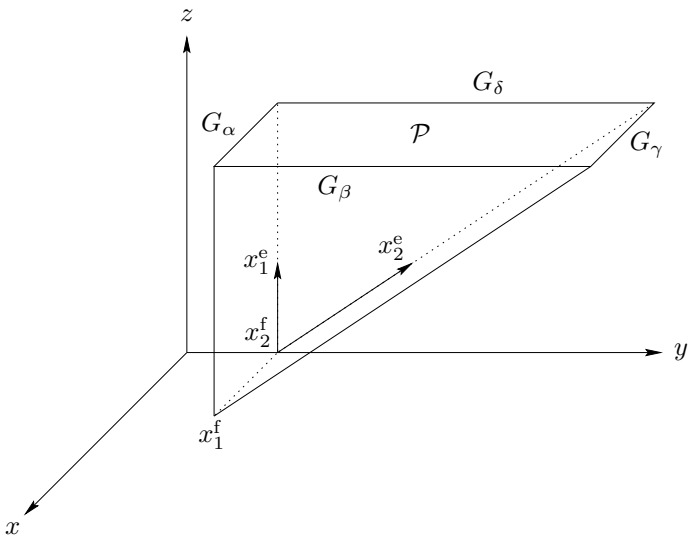

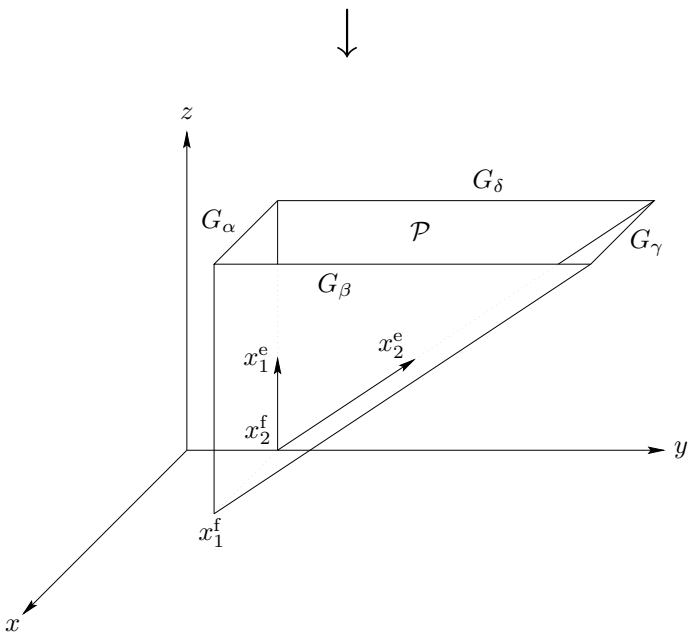

p. 58 Line 15: the words "are contained" should be removed.

p. 62 Line -8: "$\{1, 2, \ldots, p\}$" should be replaced by "$\{1, 2, \ldots, n\}$".

p. 66 Line -2: "$j = 1, 2, \ldots, n$" should be replaced by "$i = 1, 2, \ldots, n$".

p. 75 Line -1: "$e2$" should be replaced by "e_2".

p. 76 Line 2 of Adjacency Test 2: "$e2$" should be replaced by "e_2".

p. 93 Line -10: "c_u" should be replaced by "x_c" and "e_u" should be replaced by "x_e" (twice).

p. 157 Line -10: "54, 54]" should be replaced by "54, 56]".

p. 158 Line -6: "$\alpha_j A_{\cdot,i_j}$" should be replaced by "$\alpha_j \otimes A_{\cdot,i_j}$".

p. 161 Line 1: "triple" should be replaced by "4-tuple".

p. 161 Line 15: "triple" should be replaced by "4-tuple".

p. 169 Line 12: "State Realization" should be replaced by "State Space Realization".

p. 171 Line 23: "numbers" should be replaced by "number".

p. 193 Line -4: "*1,2*" should be replaced by "$1, 2$", i.e. the font style should be changed.

p. 195 Line -14: "cancelation" should be replaced by "cancellation".

p. 196 Line 11: "If" should be replaced by "If $\mu_3\mu_6 - \mu_2\mu_5 \neq 0$ and if".

p. 197 Line -14: "algebra" should be replaced by "Algebra".

p. 198 In the first line after formula (7.12) the words "for all i" might be put before "$\lim_{i\to\infty} a_i = \varepsilon$".

p. 199 In formula (7.13) the entry on the last row and the last column of the matrix $G(n, i, k, c, s)$ should be a 1 instead of a 0.

p. 208 Line 5: "exponentials" should be replaced by "exponents".

p. 209 Line 8: "then" should be replaced by "that".

p. 235 In the heading of this page the word "Chapter" has to be replaced by "Appendix". This also holds for the other even numbered pages in the ranges pp. 236–242, pp. 288–304 and pp. 308–314.

p. 236 Line -7: The words "that contains" may be added before "$z^{\max\{\operatorname{dom}_\oplus A_{\varphi\varphi} \mid \varphi\in\mathcal{C}_n^k\}}$".

p. 238 Line 2: "$1 \in \mathcal{I}$" should be replaced by "$1 \in \mathcal{J}$".

p. 238 Line 10: Add "$\otimes$" between "c_k" and "$A^{\otimes^{n-k}}$" (both on the left-hand side and the right-hand side of the equation).

p. 238 Line 10: Add "$\otimes$" between "c_k" and "$\lambda^{\otimes^{n-k}}$" (both on the left-hand side and the right-hand side of the equation).

p. 275 Line -6: "*for* $i = 1, 2, \ldots, n$" should be replaced by "*for* $i = 1, 2, \ldots, l$".

p. 275 There is an error in the formulation and the proof of Lemma C.1.4. See Section 2.1 for a corrected version.

p. 279–281 Since there was an error in the formulation and the proof of Lemma C.1.4, the proof of Lemma 6.3.7 is not entirely correct anymore. However, by taking into account the last statement of Lemma 2.4, which is the corrected version of Lemma C.1.4 (see Section 2.1), and by using a reasoning that is similar to the current one, it can be shown that Lemma 6.3.7 still holds.

p. 287 Line -4: "with a negative dominant exponent" should be added after the word "series".
Line -2: "$a_i \in \mathbb{R}$" should be replaced by "$a_i < 0$".
Remark: Note that this correction does not invalidate the proofs of Lemma 7.3.2 and Proposition 7.3.3 since there Lemma D.1.1 has been applied only on series with a negative dominant exponent.

p. 288 Lines 1–4 ("Since $f(x)$ ... also converges absolutely.") should be removed.
In lines 5–8, "c_i" should be replaced by "a_i", "γ_i" should be replaced by "α_i" and "$i = 1$" should be replaced by "$i = 0$".
Lines 9–10: ", which ... in $[K, \infty)$." should be replaced by ".".

p. 288 Line 6: "$<$" should be replaced by "$\leqslant$".

p. 327 Line 3 of reference [147]: "*the the*" should be replaced by "*the*".

2 Corrections

2.1 The corrected version of Lemma C.1.4 on p. 275

The following two technical lemmas will be used in the proof of the corrected version of Lemma C.1.4.

Lemma 2.1 *Consider m ultimately geometric sequences $h_1, \ldots, h_m$ with rates different from ε. Let c_i be the period of h_i and let λ_i be the rate of h_i for $i = 1, \ldots, m$. If $g = h_1 \oplus \cdots \oplus h_m$ and if $c = \operatorname{lcm}(c_1, \ldots, c_m)$ then*

$$\begin{aligned} &\exists K \in \mathbb{N},\ \exists \gamma_0, \ldots, \gamma_{c-1} \in \{\lambda_1, \ldots, \lambda_m\} \text{ such that} \\ &\qquad g_{kc+c+s} = {\gamma_s}^{\otimes^c} \otimes g_{kc+s} \quad \text{for all } k \geqslant K \text{ and for } s = 0, \ldots, c-1\,. \end{aligned} \tag{1}$$

Furthermore, there exists at least one index $s \in \{0, \ldots, c-1\}$ such that the smallest γ_s for which (1) holds is equal to $\bigoplus_{i=1}^{m} \lambda_i$.

Lemma 2.2 *Consider m ultimately geometric sequences $h_1, \ldots, h_m$ with rates different from ε. Let c_i be the period of h_i and let λ_i be the rate of h_i for $i = 1, 2, \ldots, m$. If $g = h_1 \otimes \ldots \otimes h_m$ and if $c = \operatorname{lcm}(c_1, \ldots, c_m)$ then*

$$\begin{aligned} &\exists K \in \mathbb{N},\ \exists \gamma_0, \ldots, \gamma_{c-1} \in \mathbb{R}_\varepsilon \text{ such that} \\ &\qquad g_{kc+c+s} = {\gamma_s}^{\otimes^c} \otimes g_{kc+s} \quad \text{for all } k \geqslant K \text{ and for } s = 0, \ldots, c-1\,. \end{aligned} \tag{2}$$

There exists at least one index $s \in \{0, 1, \ldots, c-1\}$ such that the smallest γ_s for which (2) holds is equal to $\bigoplus_{i=1}^{m} \lambda_i$. Moreover, for k^* large enough $\{g_k\}_{k=k^*}^{\infty}$ can be written as a finite *sum of ultimately geometric sequences with rates λ_i and periods c_i.*

Proof of Lemma 2.1: In this proof we always assume that $i \in \{1, \ldots, m\}$, $s, s^* \in \{0, \ldots, c-1\}$ and $k, l \in \mathbb{N}$. Since each sequence h_i is ultimately geometric, there exists an integer K such that $(h_i)_{k+c_i} = {\lambda_i}^{\otimes^{c_i}} \otimes (h_i)_k$ for all $k \geqslant K$ and for all i. Hence,

$$(h_i)_{k+pc_i} = {\lambda_i}^{\otimes^{pc_i}} \otimes (h_i)_k \qquad \text{for all } p \in \mathbb{N}, \text{ for all } k \geqslant K \text{ and for all } i\,. \tag{3}$$

Since $c = \operatorname{lcm}(c_1, \ldots, c_m)$ there exist positive integers $w_1, \ldots, w_m$ such that $c = w_i c_i$ for all i. Select $L \in \mathbb{N}$ with $Lc \geqslant K$. Consider an arbitrary index s. Since $Lc + s \geqslant K$, it follows from (3) that

$$(h_i)_{lc+s} = (h_i)_{Lc+s+(l-L)w_i c_i} = {\lambda_i}^{\otimes^{(l-L)w_i c_i}} \otimes (h_i)_{Lc+s} = {\lambda_i}^{\otimes^{(l-L)c}} \otimes (h_i)_{Lc+s} \tag{4}$$

for all $l \geqslant L$ and for all i. Define $N_s = \{\, i \,|\, (h_i)_{Lc+s} \neq \varepsilon \,\}$. We consider two cases:

- If $N_s = \emptyset$ then $(h_i)_{Lc+s} = \varepsilon$ for all i and thus also $(h_i)_{lc+s} = \varepsilon$ for all $l \geqslant L$ and for all i by (4). Hence, $g_{lc+s} = \varepsilon$ for all $l \geqslant L$. So if we set $\gamma_s = \lambda_1$ and select $K \geqslant K_s \stackrel{\text{def}}{=} L$ then (1) holds for this case.

- If $N_s \neq \emptyset$ then we define $\gamma_s = \max_{i \in N_s} \lambda_i$ and $i_s = \arg\max_{i \in N_s} \left\{ (h_i)_{Lc+s} \,\middle|\, \lambda_i = \gamma_s \right\}$. By (4) we have $(h_i)_{lc+s} = (h_i)_{Lc+s} + (l-L)c\lambda_i$ for all $l \geqslant L$ and for all i. Furthermore, $\lambda_{i_s} \geqslant \lambda_i$ for all i, and $\varepsilon \neq (h_{i_s})_{Lc+s} \geqslant (h_i)_{Lc+s}$ for all i with $\lambda_i = \gamma_s$. So if we define $K_s = L + \max\left(0, \max_{\substack{i \in N_s \\ \lambda_i \neq \gamma_s}} \left(\frac{(h_i)_{Lc+s} - (h_{i_s})_{Lc+s}}{c(\gamma_s - \lambda_i)} \right) \right)$ with $\max \emptyset = 0$ by definition, then we have $(h_{i_s})_{lc+s} \geqslant (h_i)_{lc+s}$ for all $l \geqslant K_s$ and all i. Hence, $g_{lc+s} = (h_{i_s})_{lc+s}$ for all $l \geqslant K_s$. As a consequence, (1) also holds for this case if we select $K \geqslant K_s$.

So if we define $K = \max(K_0, K_1, \ldots, K_{c-1})$ then (1) holds for all s.

Assume $\bigoplus_{i=1}^{m} \lambda_i = \lambda_j$. Since $\lambda_j \neq \varepsilon$, there exists at least one index s^* such that $(h_j)_{Lc+s^*} \neq \varepsilon$. Since $g_{lc+s^*} = (h_{i_{s^*}})_{lc+s^*}$ for all $l \geqslant K$ and since $\lambda = \lambda_{i_{s^*}}$ is the rate of $h_{i_{s^*}}$, $\gamma_s = \lambda_{i_{s^*}} = \lambda_j$ is also the smallest γ_s for which (1) holds. □

Proof of Lemma 2.2 : For sake of simplicity, we shall only prove the lemma for the case $m = 2$. The proof for $m > 2$ follows similar lines.
In this proof we always assume that $r, s \in \{0, \ldots, c-1\}$, $p, q, i, k \in \mathbb{N}$.
Since h_1 and h_2 are ultimately geometric, there exists an integer L such that

$$(h_i)_{Lc+pc+s} = {\lambda_i}^{\otimes^{pc}} \otimes (h_i)_{Lc+s} \qquad \text{for all } p, r \text{ and } i = 1, 2 \tag{5}$$

(cf. (4) with $l = L + p$). We have

$$(h_1 \otimes h_2)_k = \bigoplus_{i=0}^{Lc+c-1} (h_1)_i \otimes (h_2)_{k-i} \oplus \bigoplus_{i=Lc+c}^{k-Lc-c} (h_1)_i \otimes (h_2)_{k-i} \oplus \bigoplus_{i=0}^{Lc+c-1} (h_1)_{k-i} \otimes (h_2)_i \tag{6}$$

for all $k \geqslant 2(Lc+c)$. Now we consider an arbitrary term of the second max-plus-algebraic of (6). Let $k \geqslant 2(Lc+c)$ and $i \in \{Lc+c, \ldots, k-Lc-c\}$. Select p, q, r, s such that $i = Lc+pc+r$ and $k - i = Lc + qc + s$. It is easy to verify that we have ${\alpha}^{\otimes^p} \otimes {\beta}^{\otimes^q} \leqslant {\alpha}^{\otimes^{p+q}} \oplus {\beta}^{\otimes^{p+q}}$ for all $\alpha, \beta \in \mathbb{R}_\varepsilon$ and all $p, q \in \mathbb{N}$. Hence,

$$\begin{aligned}
(h_1)_i \otimes (h_2)_{k-i} &= {\lambda_1}^{\otimes^{pc}} \otimes (h_1)_{Lc+r} \otimes {\lambda_2}^{\otimes^{qc}} \otimes (h_2)_{Lc+s} && \text{(by (5))} \\
&\leqslant \left({\lambda_1}^{\otimes^{(p+q)c}} \oplus {\lambda_2}^{\otimes^{(p+q)c}} \right) \otimes (h_1)_{Lc+r} \otimes (h_2)_{Lc+s} \\
&\leqslant {\lambda_1}^{\otimes^{(p+q)c}} \otimes (h_1)_{Lc+r} \otimes (h_2)_{Lc+s} \oplus {\lambda_2}^{\otimes^{(p+q)c}} \otimes (h_1)_{Lc+r} \otimes (h_2)_{Lc+s} \\
&\leqslant (h_1)_{Lc+r} \otimes (h_2)_{Lc+(p+q)c+s} \oplus (h_1)_{Lc+(p+q)c+r} \otimes (h_2)_{Lc+s} && \text{(by (5))}.
\end{aligned}$$

Since $Lc+r \leqslant Lc+c-1$ and $Lc+r+Lc+s+(p+q)c = k$, the term $(h_1)_{Lc+r} \otimes (h_2)_{Lc+(p+q)c+s}$ also appears in the first max-plus-algebraic sum of (6). Similarly, it can be shown that $(h_1)_{Lc+(p+q)c+r} \otimes (h_2)_{Lc+s}$ also appears in the third max-plus-algebraic sum of (6). So the second max-plus-algebraic sum in (6) is redundant and can be omitted.
Now we define the sequences $f_{i,j}$ for $i = 0, \ldots, Lc+c$ and $j = 1, 2$ with $(f_{1,i})_k = (h_1)_i \otimes (h_2)_{k-i}$ and $(f_{2,i})_k = (h_1)_{k-i} \otimes (h_2)_i$. The sequences $f_{i,j}$ are ultimately geometric with rate λ_j and cyclicity c_j. As shown above, the terms of $h_1 \otimes h_2$ coincide with $\bigoplus_{i,j} f_{i,j}$ for k large enough. Therefore, we can now apply Lemma 2.1 provided that we select K such that $K \geqslant 2(Lc+c)$. □

Note that in general we do not have $\gamma_s = \bigoplus_{i=1}^{m} \lambda_i$ for all indices s in Lemma 2.1 as is shown by the following example.

Example 2.3 Consider the ultimately geometric sequences

$$h_1 = 0, \varepsilon, 1, 3, \varepsilon, 4, 6, \varepsilon, 7, 9, \varepsilon, 10, \ldots$$
$$h_2 = 0, \varepsilon, 0, \varepsilon, 0, \varepsilon, 0, \varepsilon, 0, \varepsilon, 0, \varepsilon, \ldots$$

with $\lambda_1 = 1$, $c_1 = 3$, $\lambda_2 = 0$ and $c_2 = 2$. We have

$$h_1 \oplus h_2 = 0, \varepsilon, 1, 3, 0, 4, 6, \varepsilon, 7, 9, 0, 10, 12, \varepsilon, 13, 15, 0, 16, \ldots$$

This sequence is ultimately periodic with $c = \mathrm{lcm}(c_1, c_2) = \mathrm{lcm}(2, 3) = 6$. Furthermore, the smallest γ_ss for which (1) holds are $\gamma_1 = \gamma_3 = \gamma_4 = \gamma_6 = 1$, $\gamma_2 = \varepsilon$ and $\gamma_5 = 0$. Note that $\varepsilon = \gamma_2 \neq \lambda_1 \oplus \lambda_2 = 1 \oplus 0 = 1$ and $\varepsilon = \gamma_2 \notin \{\lambda_1, \lambda_2\} = \{1, 0\}$. □

Lemma 2.4 (Corrected version of Lemma C.1.4) *Let $\hat{A} \in \mathbb{R}_{\varepsilon}^{n \times n}$ be a matrix of the form*

$$\hat{A} = \begin{bmatrix} \hat{A}_{11} & \hat{A}_{12} & \ldots & \hat{A}_{1l} \\ \mathcal{E} & \hat{A}_{22} & \ldots & \hat{A}_{2l} \\ \vdots & \vdots & \ddots & \vdots \\ \mathcal{E} & \mathcal{E} & \ldots & \hat{A}_{ll} \end{bmatrix} \tag{7}$$

where the matrices $\hat{A}_{11}, \ldots, \hat{A}_{ll}$ are square and irreducible. Let λ_i and c_i be respectively the max-plus-algebraic eigenvalue and the cyclicity of $\hat{A}_{ii}$ for $i = 1, \ldots, l$. Define sets $\alpha_1, \ldots, \alpha_l$ such that $\hat{A}_{\alpha_i \alpha_j} = \hat{A}_{ij}$ for all i, j with $i \leqslant j$.
Define

$$S_{ij} = \big\{ \{i_0, \ldots, i_s\} \subseteq \{1, \ldots, l\} \;\big|\; i = i_0 < i_1 < \ldots < i_s = j \text{ and } \hat{A}_{i_r i_{r+1}} \neq \mathcal{E} \text{ for } r = 0, \ldots, s-1 \big\}$$

$$\Gamma_{ij} = \bigcup_{\gamma \in S_{ij}} \gamma$$

$$\Lambda_{ij} = \begin{cases} \{\lambda_t | t \in \Gamma_{ij}\} & \text{if } \Gamma_{ij} \neq \emptyset, \\ \{\varepsilon\} & \text{if } \Gamma_{ij} = \emptyset, \end{cases}$$

$$c_{ij} = \begin{cases} \mathrm{lcm}\{ c_t \,|\, t \in \Gamma_{ij} \} & \text{if } \Gamma_{ij} \neq \emptyset \text{ and } c_t \neq 0 \text{ for some } t \in \Gamma_{ij}, \\ 1 & \text{otherwise}, \end{cases}$$

for all i, j with $i < j$. We have

$$\forall i, j \in \{1, \ldots, l\} \text{ with } i > j : \; \left(\hat{A}^{\otimes^k}\right)_{\alpha_i \alpha_j} = \mathcal{E}_{n_i \times n_j} \quad \text{for all } k \in \mathbb{N}. \tag{8}$$

Moreover, there exists an integer $K \in \mathbb{N}$ such that

$$\forall i \in \{1, \ldots, l\} : \left(\hat{A}^{\otimes k+c_i}\right)_{\alpha_i\alpha_i} = {\lambda_i}^{\otimes c_i} \otimes \left(\hat{A}^{\otimes k}\right)_{\alpha_i\alpha_i} \quad \textit{for all } k \geqslant K \tag{9}$$

and

$$\begin{aligned}&\forall i, j \in \{1, \ldots, l\} \textit{ with } i < j, \forall p \in \alpha_i, \forall q \in \alpha_j, \exists \gamma_0, \ldots, \gamma_{c_{ij}-1} \in \Lambda_{ij} \textit{ such that}\\ &\left(\hat{A}^{\otimes kc_{ij}+c_{ij}+s}\right)_{pq} = {\gamma_s}^{\otimes c_{ij}} \otimes \left(\hat{A}^{\otimes kc_{ij}+s}\right)_{pq} \quad \textit{for all } k \geqslant K \textit{ and for } s = 0, \ldots, c_{ij}-1\,.\end{aligned} \tag{10}$$

Furthermore, for each combination i, j, p, q with $i < j$, $p \in \alpha_i$ and $q \in \alpha_j$, there exists at least one index $s \in \{0, \ldots, c_{ij} - 1\}$ such that the smallest γ_s for which (10) holds is equal to $\max \Lambda_{ij}$.

Remark 2.5 Let us give a graphical interpretation of the sets S_{ij} and Γ_{ij}. Let C_i be the m.s.c.s. of $\mathcal{G}(\hat{A})$ that corresponds to $\hat{A}_{ii}$ for $i = 1, \ldots, l$. So α_i is the vertex set of C_i.
If $\{i_0 = i, i_1, \ldots, i_s = j\} \in S_{ij}$ then there exists a path from a vertex in C_{i_r} to a vertex in $C_{i_{r-1}}$ for each $r \in \{1, \ldots, s\}$. Since each m.s.c.s. C_i of $\mathcal{G}(\hat{A})$ is strongly connected, this implies that there exists a path from a vertex in C_j to a vertex in C_i that passes through $C_{i_{s-1}}$, $C_{i_{s-2}}$, $\ldots$, C_{i_1}.
If $S_{ij} = \emptyset$ then there does not exist any path from a vertex in C_j to a vertex in C_i.
The set Γ_{ij} is the set of indices of the m.s.c.s.'s of $\mathcal{G}(\hat{A})$ through which some path from a vertex of C_j to a vertex of C_i passes. $\diamond$

Proof of Lemma 2.4 : Since the matrices $\hat{A}_{\alpha_i\alpha_i}$ are irreducible, we have (9).
Recall that $(\hat{A}^{\otimes k})_{ij}$ is equal to the maximal weight over all paths of length k from j to i in $\mathcal{G}(\hat{A})$ where the maximal weight is equal to ε by definition if there does not exist any path of length k from j to i. Let C_i be the m.s.c.s. of $\mathcal{G}(\hat{A})$ that corresponds to $\hat{A}_{ii}$ for $i = 1, \ldots, l$. Since $\hat{A}_{\alpha_i\alpha_j} = \mathcal{E}_{n_i \times n_j}$ if $i > j$, there are no arcs from any vertex of C_j to a vertex in C_i. As a consequence, (8) holds.
Now consider $i, j \in \{1, \ldots, l\}$ with $i < j$. We distinguish three cases:

- If $\Gamma_{ij} = \emptyset$ then there does not exist a path from a vertex in C_j to a vertex in C_i. Hence, $\left(\hat{A}^{\otimes k}\right)_{\alpha_i\alpha_j} = \mathcal{E}_{n_i \times n_j}$ for all $k \in \mathbb{N}$. Since in this case we have $\Lambda_{ij} = \{\varepsilon\}$ and $c_{ij} = 1$, this implies that (10) and the last statement of the lemma hold if $\Gamma_{ij} = \emptyset$.

- If $\Gamma_{ij} \neq \emptyset$ and $\Lambda_{ij} = \{\varepsilon\}$ then $\hat{A}_{tt} = [\,\varepsilon\,]$ and $c_t = 1$ for all $t \in \Gamma_{ij}$. So there exist paths from a vertex in C_j to a vertex in C_i, but each path passes only through m.s.c.s.'s that consist of one vertex and contain no loop. Such a path passes through at most $\#\Gamma_{ij}$ of such m.s.c.s.'s (C_j and C_i included). This implies that there does not exist a path with a length larger than or equal to $\#\Gamma_{ij}$ from a vertex in C_j to a vertex in C_i. Hence, $\left(A^{\otimes k}\right)_{\alpha_i\alpha_j} = \mathcal{E}_{n_i \times n_j}$ for all $k \geqslant \#\Gamma_{ij}$. Furthermore, $c_{ij} = 1$ since $c_t = 1$ for all $t \in \Gamma_{ij}$. Hence, (10) and the last statement of the lemma also hold if $\Gamma_{ij} = \emptyset$ and $\Lambda_{ij} = \{\varepsilon\}$.

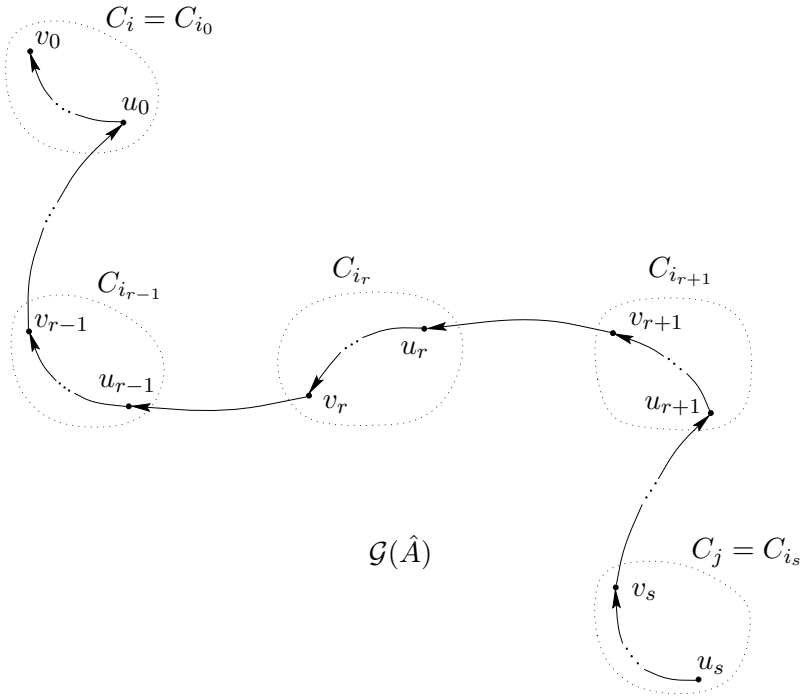

Figure 1: Illustration of the proof of Lemma 2.4. There exists a path from vertex u_s of m.s.c.s. C_j to vertex v_0 of m.s.c.s. C_i that passes through the m.s.c.s.'s $C_{i_{s-1}}$, $C_{i_{s-2}}$, ... , C_{i_1}.

- Finally, we consider the case with $\Gamma_{ij} \neq \emptyset$ and $\Lambda_{ij} \neq \{\varepsilon\}$. Select an arbitrary vertex p of C_i and an arbitrary vertex q of C_j. For each set $\gamma = \{i_0, \ldots, i_s\} \in S_{ij}$ we define

$$\mathcal{S}(\gamma) = \big\{(U,V) \,\big|\, U = \{u_0, \ldots, u_s\},\, V = \{v_0, \ldots, v_s\},\, u_s = q,\, v_0 = p, \text{ and}$$
$$u_r \in \alpha_{i_r},\, v_{r+1} \in \alpha_{i_{r+1}} \text{ and } (\hat{A})_{u_r v_{r+1}} \neq \varepsilon \text{ for } r = 0, \ldots, s\big\} \ .$$

So if $(U,V) \in \mathcal{S}(\gamma)$ with $U = \{u_0, \ldots, u_s\}$ and $V = \{v_0, \ldots, v_s\}$ then there exists a path from q to p that passes through m.s.c.s. C_{i_r} for $r = 0, \ldots, s$ and that enters C_{i_r} at vertex u_r for $r = 0, \ldots, s-1$ and that exits from C_{i_r} through vertex v_r for $r = 1, \ldots, s$ (see also Figure 1). Hence, we have

$$\left(\hat{A}^{\otimes^k}\right)_{pq} = \bigoplus_{\gamma \in S_{ij}} \bigoplus_{(U,V) \in \mathcal{S}(\gamma)} g(\gamma, U, V) \qquad \text{for all } k \in \mathbb{N}_0$$

where

$$g(\gamma,U,V) = \bigoplus_{\substack{p_0,\ldots,p_s \in \mathbb{N} \\ p_0 + \ldots + p_s = k-s}} \left(\hat{A}_{i_0 i_0}^{\otimes^{p_0}}\right)_{p u_0} \otimes \left(\hat{A}_{i_0 i_1}\right)_{u_0 v_1} \otimes \left(\hat{A}_{i_1 i_1}^{\otimes^{p_1}}\right)_{v_1 u_1} \otimes \ldots$$
$$\otimes \left(\hat{A}_{i_{s-1} i_s}\right)_{u_{s-1} v_s} \otimes \left(\hat{A}_{i_s i_s}^{\otimes^{p_s}}\right)_{v_s q} \tag{11}$$

with the empty max-plus-algebraic sum equal to ε by definition. Each term of the max-plus-algebraic sum in (11) represents the maximal weight over all paths from q to

p that consist of the concatenation of paths of length p_r from vertex u_r to vertex v_r of C_{i_r} for $r = 0, \ldots, s$ and paths of length 1 from vertex v_{r+1} of $C_{i_{r+1}}$ to vertex u_r of C_{i_r} for $r = 0, \ldots, s$ where by definition the maximal weight is equal to ε if no such paths exist. Note that if $\lambda_{i_r} = \varepsilon$ for some r then every term in the max-plus-algebraic sum (11) for which $p_r > 0$ will be equal to ε. Furthermore, since ${\varepsilon}^{\otimes 0} = 0$ by definition, this means that each factor of the form $\left(\hat{A}_{i_r i_r}^{\otimes p_r}\right)_{u_r v_r}$ for which $\lambda_{i_r} = \varepsilon$ may be removed from the max-plus-algebraic sum (11). Note that indices t for which $\lambda_t = \varepsilon$ or equivalently $c_t = 1$ do not influence the value of c_{ij}. Also note that since $\Gamma_{ij} \neq \emptyset$ and $\Lambda_{ij} \neq \{\varepsilon\}$ we have at least one combination γ, U, V for which the sequence (11) has a rate λ_{i_r} that is different from ε.
Since $\hat{A}_{i_r i_r}$ is irreducible, we have

$$\left(\hat{A}_{i_r i_r}^{\otimes k+c_{i_r}}\right)_{v_r u_r} = {\lambda_{i_r}}^{\otimes c_{i_r}} \otimes \left(\hat{A}_{i_r i_r}^{\otimes k}\right)_{v_r u_r} \qquad \text{for } k \text{ large enough}\,.$$

Hence, if $g(\gamma, U, V)$ is different from ε, i.e. if it still contains terms after the factors for which $\lambda_{i_r} = \varepsilon$ have been removed, $g(\gamma, U, V)$ is a max-plus-algebraic product of ultimate geometric sequences with rates $\lambda_{i_r} \neq \varepsilon$ and periods c_{i_r}. From Lemma 2.2 it follows that $g(\gamma, U, V)$ is an ultimately periodic sequence and that for k^* large enough $\{\big(g(\gamma, U, V)\big)_k\}_{k=k^*}^{\infty}$ can be written as the max-plus-algebraic sum of a finite number of ultimately geometric sequences with rates $\lambda_{i_r} \neq \varepsilon$ and periods c_{i_r}. So $\{(\hat{A}^{\otimes k})_{pq}\}_{k=0}^{\infty}$ is a max-plus-algebraic sum of ultimately geometric sequences with rates $\lambda_{i_r} \neq \varepsilon$ and periods c_{i_r}. Hence, it follows from Lemma 2.1 that (10) and the last statement of the lemma hold. □

Corollary 2.6 *Let $\hat{A} \in \mathbb{R}_{\varepsilon}^{n \times n}$ be a matrix of the form (7) where the matrices $\hat{A}_{11}$, $\hat{A}_{22}$, ... , $\hat{A}_{ll}$ are square and irreducible. Let λ_i and c_i be respectively the max-plus-algebraic eigenvalue and the cyclicity of $\hat{A}_{ii}$ for $i = 1, \ldots, l$. Let α_i, Λ_{ij} and c_{ij} be defined as in Lemma 2.4. Then there exists an integer K such that*

$$\forall i, j \in \{1, \ldots, l\} \text{ with } i > j,\ \forall p \in \alpha_i, \forall q \in \alpha_j,\ \exists s \in \{0, \ldots, c_{ij} - 1\} \text{ such that}$$

$$\left(\hat{A}^{\otimes kc_{ij}+s+c_{ij}} \oplus \hat{A}^{\otimes kc_{ij}+s+c_{ij}+1} \oplus \ldots \oplus \hat{A}^{\otimes kc_{ij}+s+2c_{ij}-1}\right)_{pq} =$$

$${\lambda_{ij}}^{\otimes c_{ij}} \otimes \left(\hat{A}^{\otimes kc_{ij}+s} \oplus \hat{A}^{\otimes kc_{ij}+s+1} \oplus \ldots \oplus \hat{A}^{\otimes kc_{ij}+s+c_{ij}-1}\right)_{pq} \quad \text{for all } k \geqslant K\,,$$

where $\lambda_{ij} = \max \Lambda_{ij}$.

Proof: This is a direct consequence of the last statement of Lemma 2.4. □

The following example shows that the lcm in the definition of c_{ij} in Lemma 2.4 is necessary (Lemma 4 of [1] incorrectly uses max instead of lcm.).

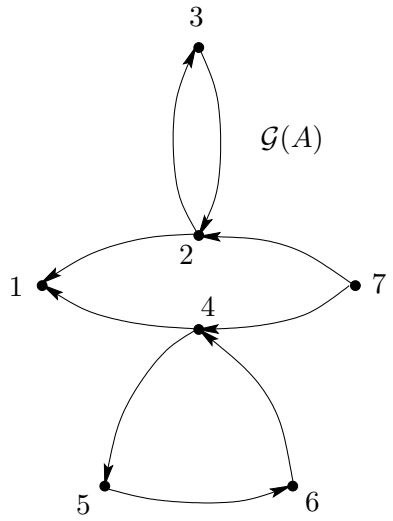

Figure 2: The precedence graph $\mathcal{G}(A)$ of the matrix A of Example 2.7. All the arcs have weight 0.

Example 2.7 Consider the matrix

$$A = \left[\begin{array}{c|cc|cc|c} \varepsilon & 0 & \varepsilon & 0 & \varepsilon & \varepsilon \\ \hline \varepsilon & \varepsilon & 0 & \varepsilon & \varepsilon & 0 \\ \varepsilon & 0 & \varepsilon & \varepsilon & \varepsilon & \varepsilon \\ \hline \varepsilon & \varepsilon & \varepsilon & \varepsilon & 0 & 0 \\ \varepsilon & \varepsilon & \varepsilon & 0 & \varepsilon & \varepsilon \\ \varepsilon & \varepsilon & \varepsilon & \varepsilon & 0 & \varepsilon \\ \hline \varepsilon & \varepsilon & \varepsilon & \varepsilon & \varepsilon & \varepsilon \end{array}\right] .$$

This matrix is in max-plus-algebraic Frobenius normal form and its block structure is indicated by the vertical and horizontal lines. The precedence graph of A is represented in Figure 2. The sets and variables of Lemma 2.4 have the following values for A: $\alpha_1 = \{1\}$, $\alpha_2 = \{2,3\}$, $\alpha_3 = \{4,5,6\}$, $\alpha_4 = \{7\}$, $\lambda_1 = \lambda_4 = \varepsilon$, $\lambda_2 = \lambda_3 = 0$, $c_1 = c_4 = 1$, $c_2 = 2$ and $c_3 = 3$. Now we consider the ultimate behavior of the sequence $\{(A^{\otimes^k})_{\alpha_1\alpha_4}\}_{k=0}^{\infty}$. Note that $S_{14} = \big\{\{2\},\{3\}\big\}$, $\Gamma_{14} = \{2,3\}$, $\Gamma_{23} = \{0\}$, and $c_{14} = \mathrm{lcm}(c_2, c_3) = \mathrm{lcm}(2,3) = 6$. We have

$$\{(\tilde{A}^{\otimes^k})_{\alpha_1\alpha_4}\}_{k=0}^{\infty} = \varepsilon, 0, \varepsilon, 0, 0, 0, \varepsilon, 0, \varepsilon, 0, 0, 0, \varepsilon, 0, \varepsilon, 0, 0, 0, \varepsilon, 0, \varepsilon, 0, 0, 0, \ldots$$

The period of this sequence is given by $c_{14} = 6 = \mathrm{lcm}(c_2, c_3)$. Hence, the lcm in the definition of c_{ij} in Lemma 2.4 is really necessary. □

The following example shows that the sequence $\{(\hat{A}^{\otimes^k})_{ij}\}_{k=1}^{\infty}$ is in general not ultimately geometric (Lemma 4 of [1] and the original version of Lemma C.1.4 on p. 275 incorrectly state that if $i < j$ then the matrix sequence $\{\hat{A}^{\otimes^k}\}_{k=0}^{\infty}$ is ultimately geometric).

Example 2.8 We construct the matrix $\tilde{A}$ from the matrix A of Example 2.7 by replacing a_{23} by 2 and keeping all other entries. Now we have $\lambda_2 = 1$. The values of the other variables

and sets of Lemma 2.4 are the same as for the matrix A of Example 2.7. We have

$$\{(\tilde{A}^{\otimes^k})_{\alpha_1\alpha_4}\}_{k=0}^{\infty} = \varepsilon, 0, \varepsilon, 2, 0, 4, \varepsilon, 6, \varepsilon, 8, 0, 10, \varepsilon, 12, \varepsilon, 14, 0, 16, \varepsilon, 18, \varepsilon, 20, 0, 22, \ldots$$

This sequence is ultimately periodic with period $c_{14} = 6$ and with rates $\gamma_0 = \gamma_2 = \varepsilon$, $\gamma_1 = \gamma_3 = \gamma_5 = 1 = \lambda_2$ and $\gamma_4 = 0 = \lambda_4$. So the sequence $\{(\hat{A}^{\otimes^k})_{ij}\}_{k=0}^{\infty}$ is in general not ultimately geometric. □

References

[1] M. Wang, Y. Li, and H. Liu, "On periodicity analysis and eigen-problem of matrix in max-algebra," in *Proceedings of the 1991 IFAC Workshop on Discrete Event System Theory and Applications in Manufacturing and Social Phenomena*, Shenyang, China, pp. 44–48, June 1991.