Katholieke Universiteit Leuven

Departement Elektrotechniek

ESAT-SISTA/TR 1999-103

A Fullband Error Adaptation Scheme for Subband Adaptive Filters [1]

Koen Eneman, Marc Moonen [2]

December 1999

[1]This report is available by anonymous ftp from *ftp.esat.kuleuven.ac.be* in the directory *pub/SISTA/eneman/reports/99.103.ps.gz*

[2]ESAT (SISTA) - Katholieke Universiteit Leuven, Kardinaal Mercierlaan 94, 3001 Leuven (Heverlee), Belgium, Tel. 32/16/321809, Fax 32/16/321970, WWW: *http://www.esat.kuleuven.ac.be/sista*. E-mail: *koen.eneman@esat.kuleuven.ac.be*. Marc Moonen is a Research Associate with the F.W.O. (Fund for Scientific Research – Flanders). This research work was carried out at the ESAT laboratory of the Katholieke Universiteit Leuven, in the frame of the Belgian State, Prime Minister's Office – Federal Office for Scientific, Technical and Cultural Affairs – Interuniversity Poles of Attraction Programme – IUAP P4–02 (1997–2001) : Modeling, Identification, Simulation and Control of Complex Systems, the Concerted Research Action MIPS ('Model–based Information Processing Systems') and GOA–MEFISTO–666 (Mathematical Engineering for Information and Communication Systems Technology) of the Flemish Government and Research Project F.W.O. nr. G.0295.97 ('Design and implementation of adaptive digital signal processing algorithms for broadband applications') The scientific responsibility is assumed by its authors.

A Fullband Error Adaptation Scheme for Subband Adaptive Filters

Koen Eneman Marc Moonen
ESAT – Katholieke Universiteit Leuven
Kardinaal Mercierlaan 94, B–3001 Heverlee – Belgium
phone : +32/16321809 +32/16321060
fax : +32/16321970
email : koen.eneman@esat.kuleuven.ac.be
marc.moonen@esat.kuleuven.ac.be

Abstract

For many years now, subband and frequency–domain adaptive filtering techniques have been proposed for the identification of high–order FIR systems. Standard fullband algorithms are less attractive as the implementation cost is higher and their convergence behaviour is worse.
Subband processing has many desirable properties. However, when used to implement adaptive filters, various side effects occur which reduce performance. On the other hand, frequency–domain adaptive filters, such as the PBFDAF, do not suffer from these problems despite being (nearly) equivalent to subband adaptive filters be it with "poor" filter banks.
In this paper an alternative fullband error based adaptation scheme for subband adaptive systems will be proposed. It will be shown that the weight updating mechanism of the so–called unconstrained PBFDAF is closely related to the proposed fullband error adaptation algorithm.

1 Introduction

Subband and frequency–domain adaptive schemes have been a topic of interest for many years now. They are employed to identify high–order FIR systems and are a promising alternative for standard fullband adaptation algorithms such as LMS. Still, with the available multirate techniques, it is difficult to meet all the requirements.
Frequency–domain techniques are well understood [1] and hence their performance is very tractable. On the other hand, *subband adaptive filters* —at first sight— may have a lower complexity and a better performance. Unfortunately, this picture of the subband approach is certainly too optimistic.
In this paper we will focus on an alternative fullband error adaptation algorithm for subband adaptive systems and show that the unconstrained PBFDAF uses

this fullband error adaptation scheme to update its filter weights. This is an attempt to generalise and extend the frequency–domain aliasing–compensation techniques to subband adaptive systems.

2 Subband Adaptive Filtering

2.1 General setup

The general setup for a subband adaptive system is shown in figure 1. The loud-

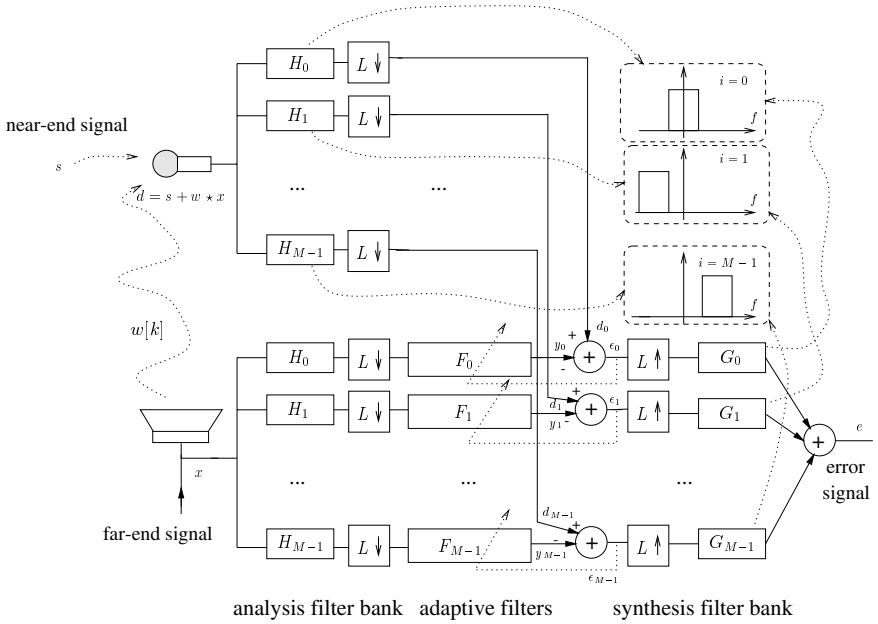

Figure 1: Subband adaptive filter with ideal filter banks : echo cancellation setup

speaker and microphone are added for convenience, indicating how the adaptive filter structure may be employed in an acoustic echo cancellation setup. While acoustic echo cancellation has been a driving application for many researchers in this field, all results obviously apply to other applications too.
The input signals x and d are fed into identical M–band analysis filter banks. After subsampling with a factor L, (mostly LMS–based) adaptive filtering is done in each subband. The outputs of the subband adaptive filters are recombined in the synthesis filter bank and fed to the output. The ideal characteristics of the analysis bank filters H_i and synthesis bank filters G_i are shown (ideal bandpass filters). Due to aliasing effects, this setup will only work for $M \geqslant L$.

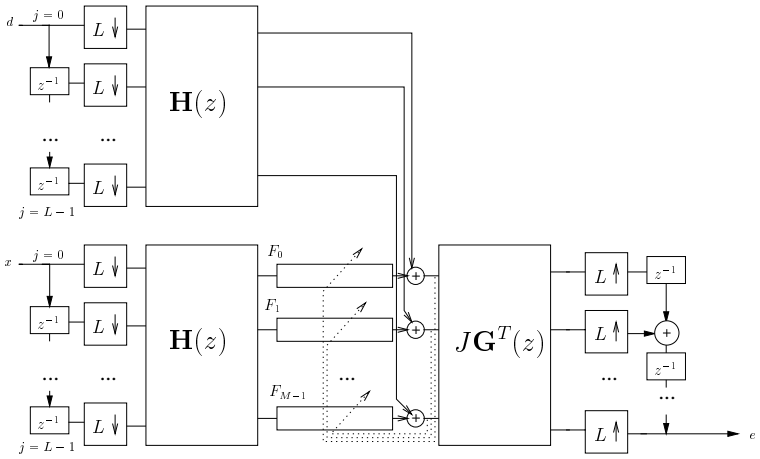

Figure 2: Subband adaptive filter : polyphase implementation

2.2 Polyphase implementation

The output of the analysis bank filters is immediately downsampled. Hence it is cheaper to do all filter operations at the downsampled rate. By re–arranging figure 1 we obtain figure 2. $\mathbf{H}(z)$ and $\mathbf{G}(z)$ are respectively called the analysis and synthesis polyphase matrix. J is the anti–diagonal matrix. Element (i, j) of $\mathbf{H}(z)$ is

$$[\mathbf{H}(z)]_{ij} = H_{i_{j:L}}(z) \qquad \begin{cases} i = 0 \to M-1 \\ j = 0 \to L-1 \end{cases} \tag{1}$$

$H_{i_{j:L}}(z)$ is the j–th out of L polyphase component of the i–th subband filter $h_i[k]$, in other words the z–transform of $h_i[j + Lk]$. Similarly,

$$[\mathbf{G}(z)]_{ij} = G_{i_{j:L}}(z) \qquad \begin{cases} i = 0 \to M-1 \\ j = 0 \to L-1 \end{cases} \tag{2}$$

2.3 DFT modulated subband adaptive filters

Subband adaptive systems are often based on DFT modulated filter banks. M subband filters are derived from a single prototype filter $h_0[k]$:

$$h_i[k] = h_0[k] e^{-j\frac{2\pi ki}{M}} \qquad i = 0 \to M-1 \tag{3}$$

$$\Leftrightarrow$$

$$H_i(z) = H_0(e^{j\frac{2\pi i}{M}} z) \tag{4}$$

It appears that the analysis filters are frequency shifted versions of each other and each filter covers a part of the frequency spectrum.
DFT modulated filter banks may be implemented efficiently using polyphase decomposition and fast signal transforms. In [2] a general framework for DFT

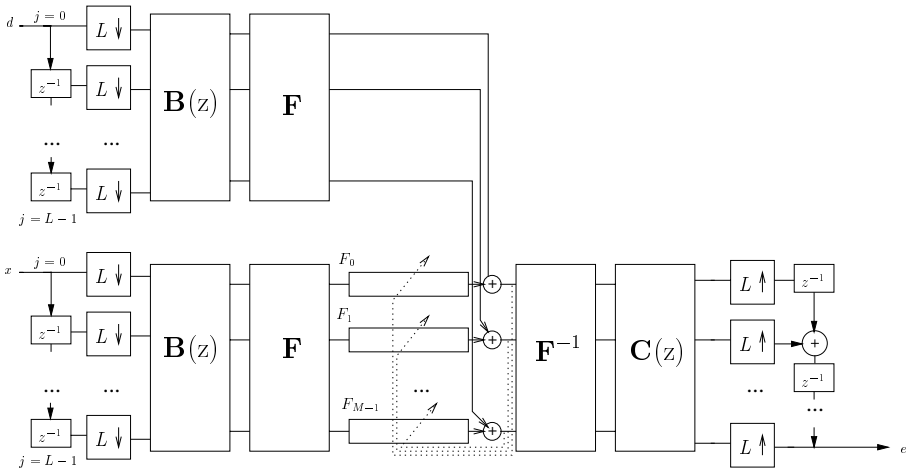

Figure 3: DFT modulated subband adaptive filter

modulated subband systems was proposed. A DFT modulated filter bank with L–fold downsampling can be implemented as a tapped delay line of size L followed by a structured $M \times L$–matrix $\mathbf{B}(z)$, containing polyphase components of the prototype h_0, and an $M \times M$–DFT matrix $\mathbf{F}$. For DFT modulated filter banks figure 2 can be redrawn resulting in figure 3. The synthesis bank is constructed in a similar fashion with an $L \times M$–matrix $\mathbf{C}(z)$.
By splitting signals into subbands and subsequent subsampling faster (initial) convergence and better tracking properties are hoped for. As the adaptive computations as well as the filter bank convolutions can be done at a reduced sampling rate, the subband approach is supposed to give a better performance at a lower cost. Unfortunately, this picture of the subband approach is certainly too optimistic [4].

3 Frequency–domain Adaptive Filtering

As a cheaper alternative to LMS, the frequency–domain adaptive filter (FDAF) was introduced, which is a direct translation of Block LMS in frequency domain [1]. The implementation cost for the FDAF is low, but the input–output delay introduced by the algorithm is typically too high.
The FDAF can be extended by splitting the acoustic impulse response in equal parts. In this way a kind of mixed time– and frequency–domain adaptive filter is obtained, called the Partitioned Block Frequency–Domain Adaptive Filter (PBFDAF) [3][6]. Here block lengths can be adjusted, resulting in a cheap adaptive filter with acceptable processing delay.
The L_{FB}–taps fullband adaptive filter $w_n[k]$ at block index n is partitioned in

$\frac{L_{FB}}{P}$ equal parts $\mathbf{w}_{p_n}$ of length P each :[1]

$$\mathbf{w}_{p_n} \stackrel{\forall p}{=} \begin{bmatrix} w_n[pP] \\ \vdots \\ w_n[(p+1)P-1] \end{bmatrix}, \quad p = 0 : \frac{L_{FB}}{P} - 1 \tag{5}$$

$$\mathbf{W}_{p_n} \stackrel{\forall p}{=} \mathbf{F} \begin{bmatrix} \mathbf{w}_{p_n} \\ \mathbf{0} \end{bmatrix} \begin{matrix} \updownarrow P \\ \updownarrow L-1 \end{matrix} \tag{6}$$

The equations defining the PBFDAF are[2] :

$$\mathbf{X}_{p_n} \stackrel{\forall p}{=} \operatorname{diag} \left\{ \mathbf{F} \begin{bmatrix} x[(n+1)L - pP - M + 1] \\ \vdots \\ x[(n+1)L - pP] \end{bmatrix} \right\} \Big\updownarrow M \tag{7}$$

$$\mathbf{y} = \begin{bmatrix} \mathbf{0}_{P-1} & \mathbf{0} \\ \mathbf{0} & \mathbf{I}_L \end{bmatrix} \mathbf{F}^{-1} \sum_{p=0}^{\frac{L_{FB}}{P}-1} \mathbf{X}_{p_n} \mathbf{W}_{p_n} \tag{8}$$

$$\mathbf{d} = \begin{bmatrix} \mathbf{0} \\ \mathbf{d}_n \end{bmatrix} \begin{matrix} \updownarrow P-1 \\ \updownarrow L \end{matrix}, \qquad \mathbf{d}_n = \begin{bmatrix} d[nL+1] \\ \vdots \\ d[(n+1)L] \end{bmatrix} \Big\updownarrow L \tag{9}$$

$$\mathbf{e} = \mathbf{d} - \mathbf{y} \tag{10}$$

$$\mathbf{W}_{p_{n+1}} \stackrel{\forall p}{=} \mathbf{W}_{p_n} + \mathbf{F} \begin{bmatrix} \mathbf{I}_P & \mathbf{0} \\ \mathbf{0} & \mathbf{0}_{L-1} \end{bmatrix} \mathbf{F}^{-1} \Delta \mathbf{X}_{p_n}^H \mathbf{F} \mathbf{e} \tag{11}$$

In each iteration, L new x–samples are taken in, and L new filter output samples are produced. L is called the block length, the corresponding input/output delay is $2L-1$. $\mathbf{F}$ is an $M \times M$ DFT matrix, $\Delta = 2\operatorname{diag}(\mu_m)$ contains the subband dependent step sizes and $M = P + L - 1$. If P is divisible by L (which is typically the case), $\mathbf{X}_{p_n} = \mathbf{X}_{0_{n-pP/L}}$ and hence equation 7 requires only 1 DFT operation, which corresponds to $p = 0$. The other $\mathbf{X}_{p_n}$ can be recovered from previous iterations. Very often M is chosen equal to $M = P + L - 1 + s = 2^r$ with $s > 0$ and r an integer. In most practical applications $P = L$.
There exists two variants of this algorithm, called the constrained and the unconstrained PBFDAF. For the unconstrained version the weight update compensation is left out resulting in the following weight update equation :

$$\mathbf{W}_{p_{n+1}} \stackrel{\forall p}{=} \mathbf{W}_{p_n} + \Delta \mathbf{X}_{p_n}^H \mathbf{F} \mathbf{e} \tag{12}$$

The unconstrained updating requires 3 DFTs whereas the constrained PBFDAF is more expensive, having an extra $\frac{2L_{FB}}{P}$ DFTs to compute. The latter on the other hand has better convergence properties.
The PBFDAF turns out to be a special subband adaptive filter having interesting convergence properties at a low implementation cost [5]. Despite the low

[1] We assume that $\frac{L_{FB}}{P}$ is integer.
[2] For signal conventions : see figure 3

frequency–selective filter banks upon which the PBFDAF is based the algorithm doesn't seem to suffer from aliasing effects and hence the convergence properties are comparable to those of LMS.

4 Alternative adaptation scheme

In an attempt to generalise and extend the frequency–domain error correction to subband adaptive systems, we now focus on an alternative adaptation scheme for subband adaptive systems, which adjusts the subband filters F_m (see figure 4) based on the fullband error e instead of using the subband error signals $\epsilon_m = d_m - y_m$ as is normally done in a standard subband scheme (see figure 1).

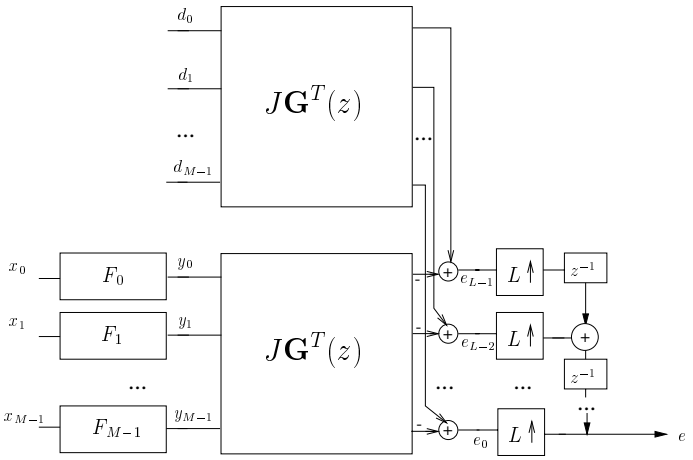

Figure 4: Oversampled subband adaptive filter : synthesis part

4.1 Fullband error adaptation scheme

Define :

$$\underbrace{\begin{bmatrix} Y_0^k \\ \vdots \\ Y_{M-1}^k \end{bmatrix}}_{\mathbf{Y}_k} = \underbrace{\begin{bmatrix} X_0^k & \dots & 0 \\ \vdots & \ddots & \vdots \\ 0 & \dots & X_{M-1}^k \end{bmatrix}}_{\mathbf{X}_k} \underbrace{\begin{bmatrix} F_0^k \\ \vdots \\ F_{M-1}^k \end{bmatrix}}_{\mathbf{w}_k}, \tag{13}$$

in which (see figure 4)

$$X_m^k = \underbrace{\begin{bmatrix} x_m[k-L_f+1] & \dots & x_m[k-L_f-L_{SB}+2] \\ \vdots & \ddots & \vdots \\ x_m[k] & \dots & x_m[k-L_{SB}+1] \end{bmatrix}}_{L_{SB}} \Bigg\updownarrow L_f, \tag{14}$$

$$F_m^k = \begin{bmatrix} f_m^k[0] \\ \vdots \\ f_m^k[L_{SB}-1] \end{bmatrix} \Bigg\updownarrow L_{SB}, \quad Y_m^k = \begin{bmatrix} y_m[k-L_f+1] \\ \vdots \\ y_m[k] \end{bmatrix} \Bigg\updownarrow L_f \tag{15}$$

$\mathbf{w}_k$ is the adaptive filter vector. L_{SB} is the length[3] of the subband adaptive filters, L_f is the length of the synthesis bank polyphase filters. Further define

$$\underbrace{\begin{bmatrix} e_0[k] \\ \vdots \\ e_{L-1}[k] \end{bmatrix}}_{\mathbf{E}_k^{FB}} = \underbrace{\begin{bmatrix} S_{0_{0:L}} & \dots & S_{M-1_{0:L}} \\ \vdots & \ddots & \vdots \\ S_{0_{L-1:L}} & \dots & S_{M-1_{L-1:L}} \end{bmatrix}}_{\mathbf{S}^T} \underbrace{\begin{bmatrix} \epsilon_0^k \\ \vdots \\ \epsilon_{M-1}^k \end{bmatrix}}_{\mathbf{E}_k^{SB}} \tag{16}$$

in which

$$\underbrace{\begin{bmatrix} \epsilon_0^k \\ \vdots \\ \epsilon_{M-1}^k \end{bmatrix}}_{\mathbf{E}_k^{SB}} = \underbrace{\begin{bmatrix} D_0^k \\ \vdots \\ D_{M-1}^k \end{bmatrix}}_{\mathbf{D}_k} - \underbrace{\begin{bmatrix} Y_0^k \\ \vdots \\ Y_{M-1}^k \end{bmatrix}}_{\mathbf{Y}_k}, \tag{17}$$

$$D_m^k = \begin{bmatrix} d_m[k-L_f+1] \\ \vdots \\ d_m[k] \end{bmatrix} \Bigg\updownarrow L_f, \quad \epsilon_m^k = \begin{bmatrix} \epsilon_m[k-L_f+1] \\ \vdots \\ \epsilon_m[k] \end{bmatrix} \Bigg\updownarrow L_f, \tag{18}$$

$$S_{m_{l:L}} = \underbrace{\begin{bmatrix} g_{m_{l:L}}[L_f-1] & \dots & g_{m_{l:L}}[0] \end{bmatrix}}_{L_f}. \tag{19}$$

$\mathbf{E}_k^{FB}$ is the fullband error vector, $\mathbf{E}_k^{SB}$ contains the subband errors, $\mathbf{S}$ represents the synthesis filter bank and $g_{m_{l:L}}[k] = g_m[kL+l]$ is the l–th out of L polyphase components of the m–th synthesis filter $g_m[k]$.
Optimal error suppression is obtained when Eq. 16 is as small as possible :

$$\min_{\mathbf{w}_k} \mathcal{E}\left\{ ||\mathbf{E}_k^{FB}||_2^2 \right\} \tag{20}$$

The optimal $\mathbf{w}$ is

$$\mathbf{w}_{\text{opt}} = \arg\min_{\mathbf{w}_k} ||\mathbf{S}^T\mathbf{D}_k - \mathbf{S}^T\mathbf{X}_k\mathbf{w}_k||_2^2. \tag{21}$$

[3]We assume that all filters are FIR.

In practice the optimal subband filters are estimated adaptively using a steepest descent algorithm. The gradient with respect to $\mathbf{w}_k$ is

$$\nabla \mathbf{w}_k = 2\mathbf{X}_k^H \mathbf{S}^* \mathbf{S}^T (\mathbf{X}_k \mathbf{w}_k - \mathbf{D}_k). \tag{22}$$

Therefore, $\mathbf{w}_{\text{opt}}$ can be found in an iterative way using a fullband error block adaptation algorithm :

$$\begin{aligned} \mathbf{w}_{k+1} &= \mathbf{w}_k + 2\Delta \mathbf{X}_k^H \mathbf{S}^* \mathbf{S}^T (\mathbf{D}_k - \mathbf{X}_k \mathbf{w}_k) & (23) \\ &= \mathbf{w}_k + 2\Delta \mathbf{X}_k^H \mathbf{S}^* \mathbf{S}^T \mathbf{E}_k^{SB} & (24) \end{aligned}$$

with $\Delta = \text{diag}(\mu_m)$ a diagonal matrix with subband dependent stepsizes. The subband errors are passed through the synthesis bank twice before they are combined with the far–end signal x.
In a standard subband adaptation scheme the subband errors are minimised, leading to

$$\min_{\mathbf{W}_k} \mathcal{E} \left\{ ||\mathbf{E}_k^{SB}||_2^2 \right\}. \tag{25}$$

The gradient with respect to $\mathbf{w}_k$ is

$$\nabla \mathbf{w}_k = 2\mathbf{X}_k^H (\mathbf{X}_k \mathbf{w}_k - \mathbf{D}_k). \tag{26}$$

Therefore, the optimal $\mathbf{w}$ can be found in an iterative way using subband errors:

$$\mathbf{w}_{k+1} = \mathbf{w}_k + 2\Delta \mathbf{X}_k^H \mathbf{E}_k^{SB}. \tag{27}$$

Equation 27 corresponds to a standard subband weights updating algorithm using a block–LMS algorithm in each band. The compensation matrix $\mathbf{S}^* \mathbf{S}^T$ is absent here. It is hoped that employing the fullband error adaptation scheme will lead to improved performance.

4.2 PBFDAF weight updating

The alternative adaptation scheme studied in paragraph 4.1, leading to a weight updating equation based on fullband errors (Eq. 24) is now applied to the PBFDAF.
For DFT modulated filter banks the synthesis bank polyphase matrix $\mathbf{G}(z)$ can be written as

$$\mathbf{F}^{-T} \mathbf{C}^T(z) J. \tag{28}$$

For the PBFDAF it can be proven [4] that when P is a multiple of L

$$\mathbf{C}(z) = \underbrace{\left[\begin{array}{cccc} \mathbf{I}_L & \mathbf{0}_L & \dots & \mathbf{0}_L \quad \mathbf{0} \end{array} \right]}_{M} = \mathbf{C} \tag{29}$$

is independent of z and hence also $\mathbf{G}(z)$ is independent of z. This means the synthesis polyphase filters have length $L_f = 1$. The PBFDAF is indeed a subband system with very "poor" filter banks (modulated sinc frequency responses). $\mathbf{S}$

as defined in Eq. 16 then equals $\mathbf{G}(z) = \mathbf{S} = \mathbf{F}^{-T}\mathbf{C}^T J$. For the PBFDAF the update equation 24 becomes

$$\mathbf{w}_{k+1} = \mathbf{w}_k + 2\frac{\Delta}{M}\mathbf{X}_k^H \mathbf{F}\mathbf{C}^T\mathbf{C}\mathbf{F}^{-1}(\mathbf{D}_k - \mathbf{X}_k\mathbf{w}_k) \quad (30)$$

$$= \mathbf{w}_k + 2\frac{\Delta}{M}\mathbf{X}_k^H \mathbf{F}\begin{bmatrix} \mathbf{I}_L & \mathbf{0} \\ \mathbf{0} & \mathbf{0}_{M-L} \end{bmatrix}\mathbf{F}^{-1}\mathbf{E}_k^{SB}. \quad (31)$$

$\mathbf{E}_k^{SB}$ are the subband errors, $\mathbf{F}\mathbf{C}^T\mathbf{C}\mathbf{F}^{-1}$ does the error correction. It can be proven (see appendix A) that the weight update equation of a so–called unconstrained PBFDAF [5][6] for which P is a multiple of L

$$\mathbf{W}_{p_{n+1}} \stackrel{\forall p}{=} \mathbf{W}_{p_n} + \Delta\mathbf{X}_{p_n}^H\mathbf{F}\mathbf{e} \quad (32)$$

is closely related to equation 31, derived here based on fullband error feedback. One can observe that the subband filters are adapted based on corrected subband errors. The correction implies passing the subband errors through the synthesis filter bank in order to obtain a fullband, i.e. an aliasing–free, error signal. This in fact refers to the overlap–save or overlap–add procedure upon which frequency–domain techniques are based. It is believed that a more general class of subband adaptive systems which are based on a filter bank set fulfilling 3 realisation conditions of frequency selectivity, perfect reconstruction and time–invariance modelling [4], and provided with the adaptation mechanism presented in paragraph 4.1, could approximate the performance of the frequency–domain approach.

5 Conclusions

For the identification of high–order FIR systems efficient adaptive algorithms, such as subband and frequency–domain adaptive filters, are required. Frequency–domain adaptive algorithms turn out to have many desirable properties. We presented an adaptation scheme that feeds back the fullband error, which can be considered as a generalisation and extension of frequency–domain error correction techniques to subband adaptive systems.

6 Acknowledgements

Marc Moonen is a Research Associate with the F.W.O. (Fund for Scientific Research – Flanders). This research work was carried out at the ESAT laboratory of the Katholieke Universiteit Leuven, in the frame of

- the Belgian State, Prime Minister's Office – Federal Office for Scientific, Technical and Cultural Affairs – Interuniversity Poles of Attraction Programme – IUAP P4–02 (1997–2001) : Modeling, Identification, Simulation and Control of Complex Systems

- the Concerted Research Action MIPS ('Model–based Information Processing Systems') and GOA–MEFISTO–666 (Mathematical Engineering for Information and Communication Systems Technology) of the Flemish Government
- Research Project F.W.O. nr. G.0295.97 ('Design and implementation of adaptive digital signal processing algorithms for broadband applications')

The scientific responsibility is assumed by its authors.

References

[1] J. Shynk, "Frequency–Domain and Multirate Adaptive Filtering," *IEEE Signal Processing Magazine*, pp. 15–37, January 1992.

[2] Z. Cvetković, "Oversampled Modulated Filter Banks and Tight Gabor Frames in $l^2(\mathbb{Z})$," in *Proceedings of the 1995 IEEE Int. Conf. on Acoust., Speech and Signal Processing*, (Detroit, Michigan, USA), pp. 1456–1459, May 1995.

[3] J.–S. Soo and K. Pang, "Multidelay Block Frequency Domain Adaptive Filter," *IEEE Trans. Acoust., Speech and Signal Processing*, vol. 38, pp. 373–376, February 1990.

[4] K. Eneman and M. Moonen, "Hybrid Subband/Frequency–Domain Adaptive Systems," Tech. Rep. 99–80, ESAT–SISTA, Katholieke Universiteit Leuven, Belgium, December 1999.

[5] K. Eneman and M. Moonen, "Filter Bank Constraints for Subband and Frequency–Domain Adaptive Filters," in *Proceedings of the 1997 IEEE Workshop on Applications of Signal Processing to Audio and Acoustics*, (New Paltz, New York, USA), October 19–22 1997.

[6] J. Páez Borrallo and M. García Otero, "On the implementation of a partitioned block frequency domain adaptive filter (PBFDAF) for long acoustic echo cancellation," *Signal Processing*, vol. 27, pp. 301–315, June 1992.

A PBFDAF vs. fullband error adaptation scheme

We first give a slightly different, but equivalent description of the fullband error adaptation algorithm presented in paragraph 4.1. The definition of $\mathbf{X}_k$, $\mathbf{w}_k$ and F_l^k are different and were obtained by re–arranging the corresponding equations in paragraph 4.1 :

$$\underbrace{\begin{bmatrix} Y_0^k \\ \vdots \\ Y_{M-1}^k \end{bmatrix}}_{\mathbf{Y}_k} = \underbrace{\begin{bmatrix} X[k] & \dots & X[k-L_{SB}+1] \end{bmatrix}}_{\bar{\mathbf{X}}_k} \underbrace{\begin{bmatrix} \bar{F}_0^k \\ \vdots \\ \bar{F}_{L_{SB}-1}^k \end{bmatrix}}_{\bar{\mathbf{w}}_k}, \qquad (33)$$

in which

$$X[n] = \underbrace{\begin{bmatrix} \chi_0[n] & \cdots & 0 \\ \vdots & \ddots & \vdots \\ 0 & \cdots & \chi_{M-1}[n] \end{bmatrix}}_{M} \Bigg\updownarrow ML_f, \tag{34}$$

$$\chi_m[n] = \begin{bmatrix} x_m[n-L_f+1] \\ \vdots \\ x_m[n] \end{bmatrix}, \tag{35}$$

$$\bar{F}_l^k = \begin{bmatrix} f_0^k[l] \\ \vdots \\ f_{M-1}^k[l] \end{bmatrix}, \quad Y_m^k = \begin{bmatrix} y_m[k-L_f+1] \\ \vdots \\ y_m[k] \end{bmatrix} \tag{36}$$

The other equations 16,17,18 and 19 are left unchanged. Apparently,

$$\mathbf{w}_k = \mathcal{P}\bar{\mathbf{w}}_k, \quad \mathbf{X}_k = \bar{\mathbf{X}}_k\mathcal{P}^T, \tag{37}$$

with $\mathcal{P}$ a permutation matrix, such that $\bar{\mathbf{w}}_k$ being a vector with L_{SB} blocks of M elements can be projected on $\mathbf{w}_k$ having M blocks of L_{SB} elements. It appears that $\mathbf{Y}_k = \bar{\mathbf{X}}_k\bar{\mathbf{w}}_k = \mathbf{X}_k\mathbf{w}_k$ has not changed. Hence, this set of equations is equivalent to the definitions given in paragraph 4.1. Also the weight updating equations 24 and 31 are still valid :

$$\bar{\mathbf{w}}_{k+1} = \bar{\mathbf{w}}_k + 2\frac{\bar{\Delta}}{M}\bar{\mathbf{X}}_k^H\mathbf{F}\begin{bmatrix} \mathbf{I}_L & \mathbf{0} \\ \mathbf{0} & \mathbf{0}_{M-L} \end{bmatrix}\mathbf{F}^{-1}\mathbf{E}_k^{SB}. \tag{38}$$

Equation 38 holds for $L_f = 1$ and $\mathbf{C}(z) = \begin{bmatrix} I_L & 0 \end{bmatrix}$ which is the case for the PBFDAF as will be shown.
Recall the equations defining the unconstrained PBFDAF :

$$\mathbf{X}_{p_k} \overset{\forall p}{=} \text{diag}\left\{\mathbf{F}\begin{bmatrix} x[(k+1)L-pP-M+1] \\ \vdots \\ x[(k+1)L-pP] \end{bmatrix}\right\}, \quad p = 0 : \frac{L_{FB}}{P} - 1 \tag{39}$$

$$\mathbf{y} = \begin{bmatrix} \mathbf{0}_{P-1+s} & \mathbf{0} \\ \mathbf{0} & \mathbf{I}_L \end{bmatrix}\mathbf{F}^{-1}\sum_{p=0}^{\frac{L_{FB}}{P}-1}\mathbf{X}_{p_k}\mathbf{W}_{p_k} \tag{40}$$

$$\mathbf{d} = \begin{bmatrix} \mathbf{0}_{P-1+s} & \mathbf{0} \\ \mathbf{0} & \mathbf{I}_L \end{bmatrix}\begin{bmatrix} d[(k+1)L-M+1] \\ \vdots \\ d[(k+1)L] \end{bmatrix} \tag{41}$$

$$\mathbf{e} = \mathbf{d} - \mathbf{y} \tag{42}$$

$$\mathbf{W}_{p_{k+1}} \overset{\forall p}{=} \mathbf{W}_{p_k} + \Delta\mathbf{X}_{p_k}^H\mathbf{F}\mathbf{e}, \qquad M = P + L - 1 + s \tag{43}$$

If P is a multiple of L it can be proven [4] that the unconstrained PBFDAF is a subband adaptive system for which in each of the M subbands there is an

$\frac{L_{FB}}{P}$–taps adaptive FIR filter. $\mathbf{X}_{p_k}$ then contains all the subband samples at time lag $p\frac{P}{L}$ w.r.t. the actual time $k+1$.
By time–reversing equation 40,

$$J\mathbf{y} = \begin{bmatrix} \mathbf{I}_L & \mathbf{0} \\ \mathbf{0} & \mathbf{0}_{P-1+s} \end{bmatrix} J\mathbf{F}^{-1} \sum_{p=0}^{\frac{L_{FB}}{P}-1} \mathbf{X}_{p_k}\mathbf{W}_{p_k} \tag{44}$$

$$= \begin{bmatrix} \mathbf{I}_L & \mathbf{0} \\ \mathbf{0} & \mathbf{0}_{P-1+s} \end{bmatrix} \mathbf{F}^{-1} \sum_{p=0}^{\frac{L_{FB}}{P}-1} \mathbf{F}J\mathbf{F}^{-1}\mathbf{X}_{p_k}\mathbf{W}_{p_k}. \tag{45}$$

Now, the following holds :

$$\frac{1}{M}\mathbf{F}J\mathbf{F} = \begin{bmatrix} e^{j\frac{2\pi 0}{M}} & \dots & 0 \\ \vdots & \ddots & \vdots \\ 0 & \dots & e^{j\frac{2\pi(M-1)}{M}} \end{bmatrix} = \Lambda. \tag{46}$$

Call

$$\mathbf{v}_p = \mathbf{F}^{-1}\mathbf{X}_{p_k}\mathbf{W}_{p_k}, \tag{47}$$

then

$$\mathbf{F}J\mathbf{v}_p = M\Lambda\mathbf{F}^{-1}\mathbf{v}_p = \Lambda\mathbf{F}^*\mathbf{v}_p. \tag{48}$$

Equation 45 becomes

$$J\mathbf{y} = \begin{bmatrix} \mathbf{I}_L & \mathbf{0} \\ \mathbf{0} & \mathbf{0}_{P-1+s} \end{bmatrix} \mathbf{F}^{-1} \sum_{p=0}^{\frac{L_{FB}}{P}-1} \Lambda\mathbf{F}^*\mathbf{v}_p \tag{49}$$

$$= \begin{bmatrix} \mathbf{I}_L & \mathbf{0} \\ \mathbf{0} & \mathbf{0}_{P-1+s} \end{bmatrix} \mathbf{F}^{-1} \sum_{p=0}^{\frac{L_{FB}}{P}-1} \Lambda(\mathbf{F}\mathbf{v}_p)^*. \tag{50}$$

$\mathbf{v}_p = \mathbf{v}_p^*$ because $d[k]$ and $x[k]$ and the unknown system in between are assumed to be real–valued, such that

$$J\mathbf{y} = \begin{bmatrix} \mathbf{I}_L & \mathbf{0} \\ \mathbf{0} & \mathbf{0}_{P-1+s} \end{bmatrix} \mathbf{F}^{-1} \sum_{p=0}^{\frac{L_{FB}}{P}-1} \Lambda\mathbf{X}_{p_k}^*\mathbf{W}_{p_k}^*. \tag{51}$$

Based on Eq. 39 and 46, we obtain

$$\mathrm{diag}\left(\mathbf{F}J \begin{bmatrix} x[(k+1)L - pP - M + 1] \\ \vdots \\ x[(k+1)L - pP] \end{bmatrix} \right) = \Lambda\mathbf{X}_{p_k}^*, \tag{52}$$

so that finally

$$J\mathbf{y} = \begin{bmatrix} \mathbf{I}_L & \mathbf{0} \\ \mathbf{0} & \mathbf{0}_{P-1+s} \end{bmatrix} \mathbf{F}^{-1} \sum_{p=0}^{\frac{L_{FB}}{P}-1} \breve{\mathbf{X}}_{p_k}\mathbf{W}_{p_k}^* \tag{53}$$

with

$$\breve{\mathbf{X}}_{p_k} = \mathrm{diag}\left(\mathbf{F}\begin{bmatrix} x[(k+1)L-pP] \\ \vdots \\ x[(k+1)L-pP-M+1] \end{bmatrix}\right) = \Lambda \mathbf{X}^*_{p_k}. \tag{54}$$

By time–reversing also the other equations of the PBFDAF

$$J\mathbf{d} = \begin{bmatrix} \mathbf{I}_L & \mathbf{0} \\ \mathbf{0} & \mathbf{0}_{P-1+s} \end{bmatrix} \begin{bmatrix} d[(k+1)L] \\ \vdots \\ d[(k+1)L-M+1] \end{bmatrix}, \tag{55}$$

$$J\mathbf{e} = J\mathbf{d} - J\mathbf{y} \tag{56}$$

Eq. 54, 53, 55 and 56 replace Eq. 39, 40, 41 and 42. All vectors appear to be time–reversed and the weight vector is complex conjugated. Applying the same transformation to the weight update equation 43 :

$$\mathbf{W}_{p_{k+1}} \overset{\forall p}{=} \mathbf{W}_{p_k} + \Delta \mathbf{X}^H_{p_k} \mathbf{F}\mathbf{e} \tag{57}$$

$$\mathbf{W}^*_{p_{k+1}} \overset{\forall p}{=} \mathbf{W}^*_{p_k} + \Delta \mathbf{X}^T_{p_k} \mathbf{F}^* J J\mathbf{e}. \tag{58}$$

By applying formula 46 and 54

$$\mathbf{W}^*_{p_{k+1}} \overset{\forall p}{=} \mathbf{W}^*_{p_k} + \Delta \mathbf{X}^T_{p_k} \Lambda^* \mathbf{F} J\mathbf{e} \tag{59}$$

one can observe that the weight update formula becomes

$$\mathbf{W}^*_{p_{k+1}} \overset{\forall p}{=} \mathbf{W}^*_{p_k} + \Delta \breve{\mathbf{X}}^H_{p_k} \mathbf{F} J\mathbf{e}. \tag{60}$$

By stacking the previous equation $\forall p$, we obtain

$$\begin{bmatrix} \mathbf{W}^*_{0_{k+1}} \\ \vdots \\ \mathbf{W}^*_{\frac{L_{FB}}{P}-1_{k+1}} \end{bmatrix} = \begin{bmatrix} \mathbf{W}^*_{0_k} \\ \vdots \\ \mathbf{W}^*_{\frac{L_{FB}}{P}-1_k} \end{bmatrix} + \Delta \begin{bmatrix} \breve{\mathbf{X}}^H_{0_k} \\ \vdots \\ \breve{\mathbf{X}}^H_{\frac{L_{FB}}{P}-1_k} \end{bmatrix} \mathbf{F} J\mathbf{e} \tag{61}$$

in which

$$J\mathbf{e} = \begin{bmatrix} \mathbf{I}_L & \mathbf{0} \\ \mathbf{0} & \mathbf{0}_{P-1+s} \end{bmatrix} \mathbf{F}^{-1}\mathbf{E} \tag{62}$$

and

$$\mathbf{E} = \mathbf{F}\begin{bmatrix} d[(k+1)L] \\ \vdots \\ d[(k+1)L-M+1] \end{bmatrix} - \begin{bmatrix} \breve{\mathbf{X}}_{0_k} & \cdots & \breve{\mathbf{X}}_{\frac{L_{FB}}{P}-1_k} \end{bmatrix} \begin{bmatrix} \mathbf{W}^*_{0_k} \\ \vdots \\ \mathbf{W}^*_{\frac{L_{FB}}{P}-1_k} \end{bmatrix}. \tag{63}$$

Equation 61 corresponds to equation 38 if we take $P = L$ and define

$$\bar{\mathbf{w}}_k = \begin{bmatrix} \mathbf{W}^*_{0_k} \\ \vdots \\ \mathbf{W}^*_{\frac{L_{FB}}{P}-1_k} \end{bmatrix} \tag{64}$$

$$\bar{\mathbf{X}}_k = \begin{bmatrix} \breve{\mathbf{X}}_{0_k} & \dots & \breve{\mathbf{X}}_{\frac{L_{FB}}{P}-1_k} \end{bmatrix} \tag{65}$$

and hence

$$X[k-l] = \breve{\mathbf{X}}_{l_k} \tag{66}$$

$$\bar{F}^k_l = \mathbf{W}^*_{l_k} \tag{67}$$

$$\mathbf{D}_k = \mathbf{F} \begin{bmatrix} d[(k+1)L] \\ \vdots \\ d[(k+1)L - M + 1] \end{bmatrix} \tag{68}$$

$$\mathbf{E}^{SB}_k = \mathbf{E} \tag{69}$$

$$\mathbf{Y}_k = \begin{bmatrix} \breve{\mathbf{X}}_{0_k} & \dots & \breve{\mathbf{X}}_{\frac{L_{FB}}{P}-1_k} \end{bmatrix} \begin{bmatrix} \mathbf{W}^*_{0_k} \\ \vdots \\ \mathbf{W}^*_{\frac{L_{FB}}{P}-1_k} \end{bmatrix} \tag{70}$$

$$L_f = 1 \tag{71}$$

$$L_{SB} = \frac{L_{FB}}{P}. \tag{72}$$

This proves that apart from a slightly different definition of the adaptation matrix Δ the weight update equation of the unconstrained PBFDAF, as it is mostly used in practice with $P = L$, corresponds to equation 38, which was derived based on fullband error feedback.
If P is multiple of L with $\frac{P}{L} > 1$, the equations do not match exactly anymore. In that case it suffices to define

$$\bar{\mathbf{X}}_k = \begin{bmatrix} X[k] & X[k-\frac{P}{L}] & \dots & X[k-\frac{P}{L}(L_{SB}-1)] \end{bmatrix}. \tag{73}$$