ARTICLE IN PRESS

Available online at www.sciencedirect.com

SCIENCE DIRECT®

ELSEVIER

Systems & Control Letters ▮▮▮ (▮▮▮▮) ▮▮▮–▮▮▮

SYSTEMS & CONTROL LETTERS

www.elsevier.com/locate/sysconle

The canonical controllers and regular interconnection

A.A. Julius[a,*], J.C. Willems[b], M.N. Belur[c], H.L. Trentelman[d]

[a]*Department of Applied Mathematics, University of Twente, P.O. Box 217, 7500 AE Enschede, The Netherlands*
[b]*K.U. Leuven, Kasteelpark Arenberg 10, B-3001 Leuven-Heverlee, Belgium*
[c]*Department of Electrical Engineering, Indian Institute of Technology Bombay, Powai, Mumbai 400 076, India*
[d]*Department of Mathematics, University of Groningen, P.O. Box 800, 9700 AV Groningen, The Netherlands*

Received 28 April 2004; received in revised form 30 November 2004; accepted 1 December 2004

Abstract

We study the control problem from the point of view of the behavioral systems theory. Two controller constructions, called canonical controllers, are introduced. We prove that for linear time-invariant behaviors, the canonical controllers implement the desired behavior if and only if there exists a controller that implements it. We also investigate the regularity of the canonical controllers, and establish the fact that they are maximally irregular. This means a canonical controller is regular if and only if every other controller that implements the desired behavior is regular.
© 2005 Elsevier B.V. All rights reserved.

Keywords: Behaviors; Behavioral control; Regular interconnection; Regular controller; Canonical controller; Implementability

1. Introduction

Control problems, seen from the behavioral systems theory point of view, amount to finding a controller, which when interconnected with the plant in a specified way yields the desired behavior [14,1]. The problem may be formulated as follows. Consider a plant to be controlled which has two kinds of variables: *to-be-controlled variables* and *control variables*. A *controller* is a device that is attached to the control variables and restricts their behavior. This restriction is imposed on the plant, such that it affects the behavior of the to-be-controlled variables (see Fig. 1). The resulting behavior is called the *controlled system*.

In this paper we discuss the properties of a special type of controllers, the so-called *canonical controllers* [11,10,16]. We are particularly interested in their regularity properties. The concepts of canonical and regular controllers will be formally introduced later in this paper.

While the behavioral approach sees *control as interconnection*, the more common point of view in control theory is to view a controller as a feedback

* Corresponding author. Tel.: +31 53 4893 459; fax: +31 53 4893 800.
E-mail addresses: a.a.julius@math.utwente.nl (A.A. Julius), jan.willems@esat.kuleuven.ac.be (J.C. Willems), belur@ee.iitb.ac.in (M.N. Belur), h.l.trentelman@math.rug.nl (H.L. Trentelman).

0167-6911/$ - see front matter © 2005 Elsevier B.V. All rights reserved.
doi:10.1016/j.sysconle.2004.12.002

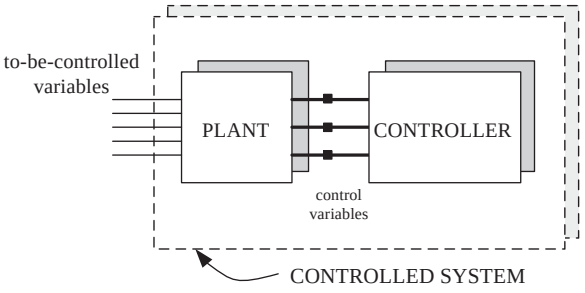

Fig. 1. Control in the behavioral approach.

processor that accepts the plant sensor outputs as its inputs and produces the actuator inputs as its outputs. In [14], this paradigm is called *'intelligent control'*, as the controller acts as an intelligent agent capable of reasoning how to react to sensory observations.

The main advantages of the behavioral over the classical feedback point of view are:

(i) Its practical generality. In many control systems, the controller (i.e. the device added to the plant system to obtain a desired behavior) does not act as a sensor/actuator device. Dampers, heat fins, acoustic noise insulators are examples of such devices.
(ii) Its theoretical simplicity. Control in the behavioral setting has been introduced in [14], and subsequent development includes the work in [6,17,9]. The reader is referred to [12] for further motivation and details.

Throughout this paper, we shall denote the control variables as **c** and the to-be-controlled variables as **w**. These variables take their value at any given time from their respective signal spaces $\mathbb{C}$ and $\mathbb{W}$. Let **W** and **C** denote the set of all trajectories of the variables **w** and **c** that are a priori possible, before we have even modelled the plant. In dynamical systems, **W** and **C** are typically the set of (smooth) signals from the time axis to the signal spaces $\mathbb{W}$ and $\mathbb{C}$. In discrete event systems, the time axis is discrete and the signal spaces are typically called alphabets.

We shall now discuss our problem from a purely set theoretic point of view. The behavioral model of the plant system that captures the relevant relation between **w** and **c** is called the *full plant behavior*, which is denoted by $\mathscr{P}_{\text{full}}$. Naturally, we assume that $\mathscr{P}_{\text{full}}$ is

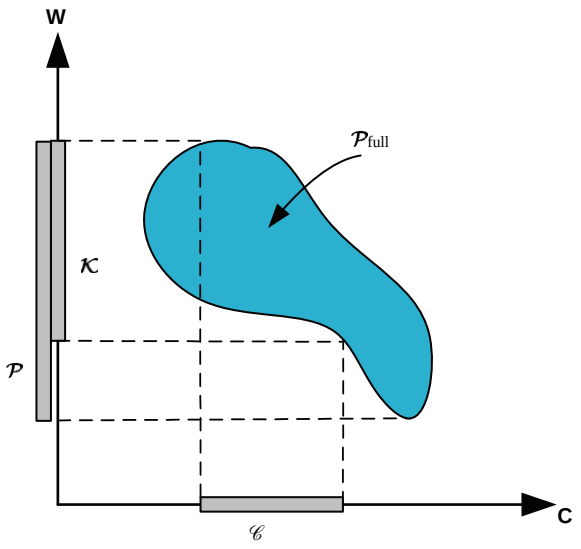

Fig. 2. The relation between $\mathscr{P}_{\text{full}}$, $\mathscr{P}$, $\mathscr{C}$, and $\mathscr{K}$.

contained in $\mathbf{W} \times \mathbf{C}$. The full plant behavior consists of all signal pairs (w, c) compatible with the plant dynamics. If we project the full behavior on **W**, we obtain the so called *manifest behavior*, which is denoted as $\mathscr{P}$. Thus,

$$\mathscr{P} := \{w \in \mathbf{W} \mid \exists\, c \in \mathbf{C} \text{ such that } (w, c) \in \mathscr{P}_{\text{full}}\}.$$

A controller $\mathscr{C}$ is a subset of **C**, containing all signals c allowed by the controller. The *controlled behavior* is then defined as

$$\mathscr{K} := \{w \in \mathbf{W} \mid \exists\, c \in \mathbf{C} \text{ such that } (w, c) \in \mathscr{P}_{\text{full}} \text{ and } c \in \mathscr{C}\}.$$

The relationship between the full plant behavior, the manifest behavior, the controller and the controlled behavior is captured in Fig. 2.

In this framework, the control problem can be formulated as to find a controller $\mathscr{C}$ that yields a desired controlled behavior $\mathscr{D}$. Hence the controller $\mathscr{C}$ should yield the controlled behavior $\mathscr{K} = \mathscr{D}$. We call $\mathscr{D}$ the *desired controlled behavior*. If it is possible to find a controller $\mathscr{C}$ that yields $\mathscr{K} = \mathscr{D}$, then $\mathscr{D}$ is said to be *implementable*[1] or *implemented* by $\mathscr{C}$. Further, if a given desired $\mathscr{D}$ is implementable, we say that 'the control problem is solvable'.

[1] In the literature the term *achievable* is sometimes used instead of *implementable*.

The remainder of this paper is organized as follows. In Section 2 we present two constructions for the *canonical controllers* and their properties in the setting of general behaviors. In Section 3 we discuss the concept of implementability, particularly for LTI behaviors. Section 4 is devoted for discussion on the concept of regularity. In Section 5, we study the behavior implemented by the canonical controller and use the result from Section 4 to establish its regularity.

2. The construction and properties of the canonical controllers

In the previous section we explained that we work in the generality in which the plant has two types of variables, the to-be-controlled variables and the control variables, and further that a controller can put a restriction on just the control variables. This restriction is propagated through the plant to the to-be-controlled variables.

The idea of the canonical controller uses the 'internal model principle' in the following way [11,10]. We use a plant model that has the same behavior as the plant. The propagation of information explained in the previous paragraph is then *reversed* by interconnecting the plant model to the desired behavior $\mathscr{D}$ using the to-be-controlled variables[2]. This is how we construct the canonical controller. Fig. 3 illustrates this construction. Notice that the word PLANT is mirrored to highlight the fact that the interconnection is reversed. The behavior of the canonical controller obtained using this construction is denoted as $\mathscr{C}'_{\text{canonical}}$.

$$\mathscr{C}'_{\text{canonical}} := \{c \in \mathbf{C} \mid \exists\, v \in \mathbf{W} \text{ such that } (v, c) \in \mathscr{P}_{\text{full}} \text{ and } v \in \mathscr{D}\}. \tag{1}$$

Fig. 4 provides a block diagram showing how $\mathscr{C}'_{\text{canonical}}$ is applied.

In [11,10], it is proven that for a class of plants, which are 'homogeneous' in the plant and control variables, the control problem is solvable (i.e. $\mathscr{D}$ is implementable) if and only if the canonical controller $\mathscr{C}'_{\text{canonical}}$ implements $\mathscr{D}$. We now define the homogeneity property.

[2] A construction similar to the canonical controller has been used in [7]

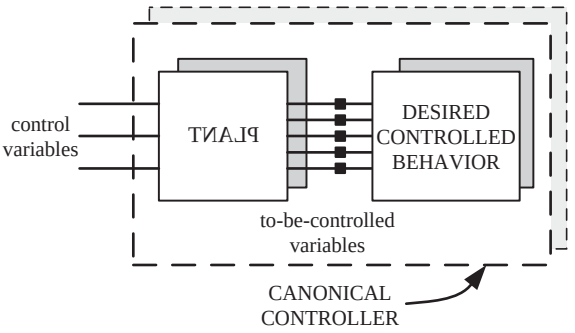

Fig. 3. The construction of $\mathscr{C}'_{\text{canonical}}$. Mirrored text reflects the idea that the interconnection is reversed.

Definition 1. A full plant behavior $\mathscr{P}_{\text{full}}$ is said to have the *homogeneity property* if for any $w_1, w_2 \in \mathbf{W}$ and $c_1, c_2 \in \mathbf{C}$, the following implication holds:

$$(w_1, c_1), (w_1, c_2), (w_2, c_1) \in \mathscr{P}_{\text{full}} \Rightarrow (w_2, c_2) \in \mathscr{P}_{\text{full}}.$$

Homogeneity can also be understood as follows. The behavior $\mathscr{P}_{\text{full}}$ can be seen as a relation between **W** and **C**. A relation is called *independent* if it can be written as a Cartesian product of its projections on the related domains. The behavior $\mathscr{P}_{\text{full}}$ has the homogeneity property if it can be written as a disjoint union of independent relations. In particular, if **W** and **C** are linear spaces and $\mathscr{P}_{\text{full}}$ is a linear subspace, then $\mathscr{P}_{\text{full}}$ has the homogeneity property.

The following theorem captures an important property of the canonical controller $\mathscr{C}'_{\text{canonical}}$.

Theorem 2. *If the full plant behavior $\mathscr{P}_{\text{full}}$ has the homogeneity property, then the canonical controller $\mathscr{C}'_{\text{canonical}}$ implements the smallest implementable behavior containing $\mathscr{P} \cap \mathscr{D}$.*

Proof. Denote the behavior implemented by $\mathscr{C}'_{\text{canonical}}$ as $\mathscr{K}$. From (1), we can infer that $\mathscr{K} \supseteq \mathscr{P} \cap \mathscr{D}$. To show that $\mathscr{C}'_{\text{canonical}}$ implements the smallest implementable behavior containing $\mathscr{P} \cap \mathscr{D}$, consider any other controller $\mathscr{C}'$ that implements $\mathscr{K}'$ such that $\mathscr{K}' \supseteq \mathscr{P} \cap \mathscr{D}$. We shall prove that $\mathscr{K} \subseteq \mathscr{K}'$.

Take any element $w \in \mathscr{K}$. We are going to show that $w \in \mathscr{K}'$. If $w \in \mathscr{P} \cap \mathscr{D}$, then $w \in \mathscr{K}'$, since $\mathscr{K}' \supseteq \mathscr{P} \cap \mathscr{D}$.

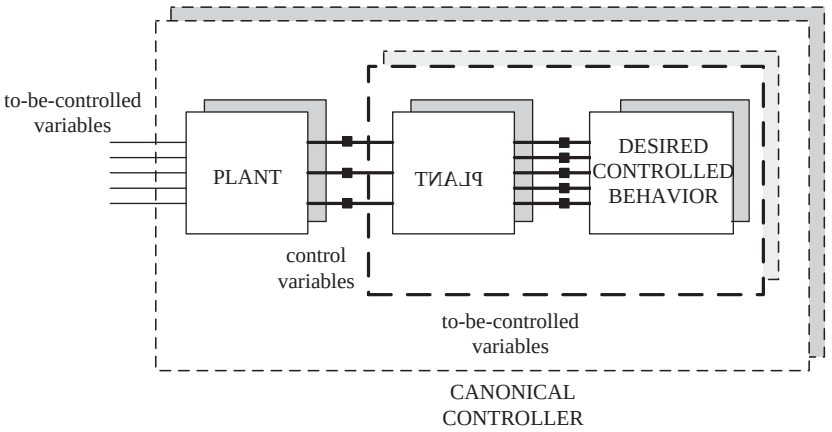

Fig. 4. The canonical controller $\mathscr{C}'_{\text{canonical}}$ in action.

If $w \notin \mathscr{P} \cap \mathscr{D}$, there exists a $c \in \mathscr{C}'$ and $w' \in \mathscr{P} \cap \mathscr{D}$ such that both (w, c) and (w', c) are elements of $\mathscr{P}_{\text{full}}$. Now we are going to show that $w \notin \mathscr{K}'$ is a contradiction. Suppose that it is true, then

$$\{c \in \mathbf{C} \mid (w, c) \in \mathscr{P}_{\text{full}}\} \cap \mathscr{C}' = \emptyset.$$

By the homogeneity property, we also have that

$$\{c \in \mathbf{C} \mid (w, c) \in \mathscr{P}_{\text{full}}\} = \{c \in \mathbf{C} \mid (w', c) \in \mathscr{P}_{\text{full}}\}.$$

Thus, the following relation is also true:

$$\{c \in \mathbf{C} \mid (w', c) \in \mathscr{P}_{\text{full}}\} \cap \mathscr{C}' = \emptyset.$$

This implies $w' \notin \mathscr{K}'$, which is a contradiction. □

Remark 3. Theorem 2 also tells us that for every control problem involving a plant with the homogeneity property, the smallest implementable behavior containing $\mathscr{P} \cap \mathscr{D}$ exists.

Obviously, a necessary condition for implementability of $\mathscr{D}$ is $\mathscr{D} \subset \mathscr{P}$. This fact, combined with Theorem 2 gives $\mathscr{C}'_{\text{canonical}}$ its special property.

Corollary 4. *Assume the full plant behavior has the homogeneity property. Then, the canonical controller* $\mathscr{C}'_{\text{canonical}}$ *implements* $\mathscr{D}$ *if and only if* $\mathscr{D}$ *is implementable* (*that is, if and only the control problem is solvable*).

As already noted, if $\mathscr{P}_{\text{full}}$ is a linear behavior, then it has the homogeneity property. Hence, although seemingly restrictive, the class of behaviors with the homogeneity property is, in fact, fairly large, and most importantly, it captures the class of linear time-invariant behaviors, the subject of Sections 3–5.

We give LTI behaviors as examples of behaviors with the homogeneity property. For that of behaviors without the homogeneity property, refer to the plant behavior depicted in Fig. 2.

There is, in fact, a second canonical controller that is of interest, and has been introduced in [16]. The canonical controller, denoted as $\mathscr{C}''_{\text{canonical}}$, is defined as follows,

$$\mathscr{C}''_{\text{canonical}} := \{c \in \mathbf{C} \mid \exists\, v \text{ such that } \left.\begin{array}{l} \bullet (v, c) \in \mathscr{P}_{\text{full}}, \quad \text{and} \\ \bullet (v, c) \in \mathscr{P}_{\text{full}} \Rightarrow v \in \mathscr{D} \end{array}\right\}. \tag{2}$$

In other words, this canonical controller accepts a control-variable trajectory c if and only if every to-be-controlled-variables trajectory v that can be paired with c is accepted in the desired behavior. Clearly, whatever behavior is implemented by this controller, it must be contained in $\mathscr{D}$. In fact, we have the following theorem.

Theorem 5. *The canonical controller* $\mathscr{C}''_{\text{canonical}}$ *implements the largest implementable behavior contained in* $\mathscr{D}$.

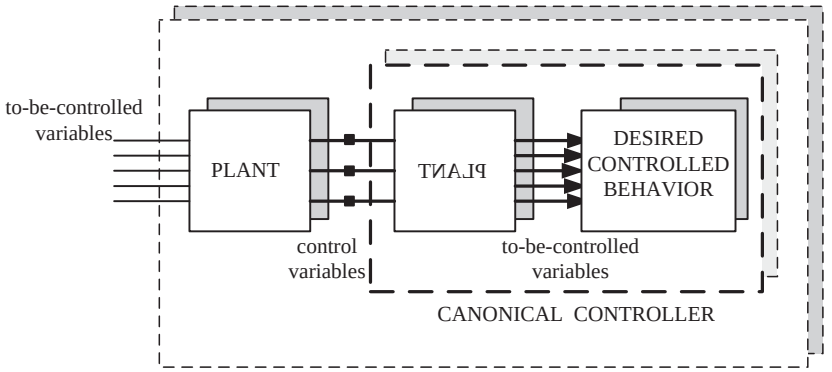

Fig. 5. The canonical controller $\mathscr{C}''_{\text{canonical}}$ in action.

Proof. Denote the behavior implemented by $\mathscr{C}''_{\text{canonical}}$ as $\mathscr{K}$. It is quite obvious that $\mathscr{K} \subseteq \mathscr{D}$. To show that $\mathscr{C}''_{\text{canonical}}$ implements the largest implementable behavior in $\mathscr{D}$, consider any other controller $\mathscr{C}'$ that implements $\mathscr{K}'$ such that $\mathscr{K}' \subseteq \mathscr{D}$. We shall prove that $\mathscr{K}' \subseteq \mathscr{K}$.

Take any element $w \in \mathscr{K}'$. There exists a $c \in \mathscr{C}'$ such that

$$(w, c) \in \mathscr{P}_{\text{full}},$$
$$\{v \in \mathbf{W} \mid (v, c) \in \mathscr{P}_{\text{full}}\} \subseteq \mathscr{K}' \subseteq \mathscr{D}. \tag{3}$$

From (2) and (3), we can infer that $c \in \mathscr{C}''_{\text{canonical}}$ and therefore $w \in \mathscr{K}$. □

Remark 6. Using Theorem 5, we can also infer that for every control problem (not necessarily the ones with homogeneity property), the largest implementable behavior contained in $\mathscr{D}$ exists.

As a consequence of Theorem 5, the canonical controller $\mathscr{C}''_{\text{canonical}}$ possesses the following special property.

Corollary 7. *The canonical controller* $\mathscr{C}''_{\text{canonical}}$ *implements* $\mathscr{D}$ *if and only if* $\mathscr{D}$ *is implementable* (*that is, if the control problem is solvable*).

Fig. 5 illustrates the action of $\mathscr{C}''_{\text{canonical}}$. Notice that the connectors are replaced with symbols denoting "implies". For comparison, the behaviors implemented by the two canonical controllers are shown in Fig. 6.

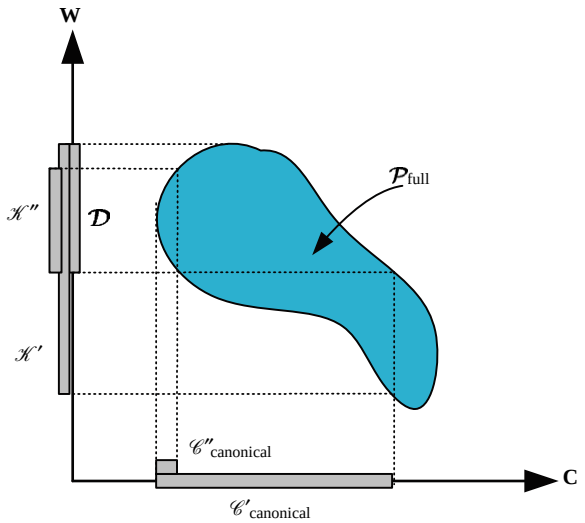

Fig. 6. Comparison between the $\mathscr{C}'_{\text{canonical}}$ and $\mathscr{C}''_{\text{canonical}}$.

3. Implementability of linear behaviors

In the remaining of the paper we shall restrict our attention to LTI differential behaviors. This class of behaviors has been discussed quite extensively in the literature, see [13,6,12], for example. In the following we give a brief introduction to the subject to make this paper self-contained.

We use the symbol $\mathfrak{L}^{\mathbf{w}}$ to denote the class of LTI differential[3] systems with $\mathbf{w}$ variables. These are dynamical systems $\Sigma = (\mathbb{R}, \mathbb{R}^{\mathbf{w}}, \mathfrak{B})$, where the behavior $\mathfrak{B}$ can be expressed as the solutions of a system of differential equations

$$R\left(\frac{\mathrm{d}}{\mathrm{d}t}\right) w = 0. \tag{4}$$

Here the polynomial matrix $R \in \mathbb{R}^{\bullet\times\mathbf{w}}[\xi]$. Furthermore, the behavior $\mathfrak{B}$ is defined to be the set of all smooth solutions to the differential equations,

$$\mathfrak{B} := \left\{ w \in \mathfrak{C}^{\infty}(\mathbb{R}, \mathbb{R}^{\mathbf{w}}) \mid R\left(\frac{\mathrm{d}}{\mathrm{d}t}\right) w = 0 \right\}. \tag{5}$$

The differential equation (4) is called a *kernel representation* of $\mathfrak{B}$ and sometimes we write $\mathfrak{B} = \ker R(\mathrm{d}/\mathrm{d}t)$. A kernel representation is called *minimal* if the rank of the polynomial matrix is equal to the number of its rows.

Often, the behavior is defined through auxiliary variables. In this case, we use the term *manifest* for the variables of interest, and *latent* for the auxiliary ones. If $\mathfrak{B} \in \mathfrak{L}^{\mathbf{w}+\ell}$ is a system involving the manifest variables $\mathbf{w}$ and the latent variables $\mathbf{l}$ then it can be proven (see [13,6]) that the *manifest behavior* $\mathfrak{B}_w$ defined by

$$\mathfrak{B}_w := \{ w \in \mathfrak{C}^{\infty}(\mathbb{R}, \mathbb{R}^{\mathbf{w}}) \mid \exists\, \ell \in \mathfrak{C}^{\infty}(\mathbb{R}, \mathbb{R}^{\ell}) \text{ such that } (w, \ell) \in \mathfrak{B} \}$$

is also an element of $\mathfrak{L}^{\mathbf{w}}$. This result is referred to as *the elimination theorem*.

Remark 8. The choice of the underlying function space $\mathfrak{C}^{\infty}(\mathbb{R}, \mathbb{R}^{\mathbf{w}})$ is made for mathematical convenience. An alternative that is quite commonly used is to regard the behavior as the collection of *weak* solutions of the differential equation (4), which are elements of $\mathfrak{L}_1^{\mathrm{loc}}(\mathbb{R}, \mathbb{R}^{\mathbf{w}})$, the space of locally *integrable functions*. We refer to [6] for further exposition on this issue.

We return to the control problem discussed in Section 1. For linear time-invariant differential systems, the control problem can be formulated as follows. The *plant behavior* $\mathscr{P}_{\mathrm{full}} \in \mathfrak{L}^{\mathbf{w}+\mathbf{c}}$ is expressed in terms of the to-be-controlled variables $\mathbf{w}$ and the control variables $\mathbf{c}$. The controller behavior $\mathscr{C}$ is an element of $\mathfrak{L}^{\mathbf{c}}$. The controlled behavior $\mathscr{K}$ defined by

$$\mathscr{K} := \{ w \in \mathfrak{C}^{\infty}(\mathbb{R}, \mathbb{R}^{\mathbf{w}}) \mid \exists\, c \in \mathscr{C} \text{ such that } (w, c) \in \mathscr{P}_{\mathrm{full}} \},$$

is an element of $\mathfrak{L}^{\mathbf{w}}$ (as a consequence of the elimination theorem).

For linear differential systems, the implementability question becomes:

Question. *Given $\mathscr{P}_{\mathrm{full}} \in \mathfrak{L}^{\mathbf{w}+\mathbf{c}}$, which behaviors $\mathscr{K} \in \mathfrak{L}^{\mathbf{w}}$ can be implemented by using a suitable controller $\mathscr{C} \in \mathfrak{L}^{\mathbf{c}}$?*

The answer to this question is summarized in the following theorem.

Theorem 9. *Given $\mathscr{P}_{\mathrm{full}} \in \mathfrak{L}^{\mathbf{w}+\mathbf{c}}$, the behavior $\mathscr{K} \in \mathfrak{L}^{\mathbf{w}}$ is implementable if and only if*

$$\mathscr{N} \subseteq \mathscr{K} \subseteq \mathscr{P}, \tag{6}$$

where $\mathscr{N} \in \mathfrak{L}^{\mathbf{w}}$ is the hidden behavior defined by

$$\mathscr{N} := \{ w \in \mathfrak{C}^{\infty}(\mathbb{R}, \mathbb{R}^{\mathbf{w}}) \mid (w, 0) \in \mathscr{P}_{\mathrm{full}} \},$$

and $\mathscr{P}$ is the manifest plant behavior defined by

$$\mathscr{P} := \{ w \in \mathfrak{C}^{\infty}(\mathbb{R}, \mathbb{R}^{\mathbf{w}}) \mid \exists\, c \in \mathfrak{C}^{\infty}(\mathbb{R}, \mathbb{R}^{\mathbf{c}}) \text{ such that } (w, c) \in \mathscr{P}_{\mathrm{full}} \}.$$

This result was first published in [15] and subsequently used in [2,5,8–11].

It is important to notice that the controller that implements $\mathscr{K}$ is usually not unique. Generally speaking, the controllers that implement the same behavior may have very different properties.

4. Regular interconnections

In the previous section, we have been discussing interconnection of linear differential behaviors without considering any further restrictions. We now introduce a notion of compatibility in the control problem. In order to motivate it, consider the following example.

[3] The analysis also holds if difference equations were used instead of differential equations; however, we restrict our attention to differential equations in order to ease the exposition.

Let $\mathscr{P}$ and $\mathscr{C}$ be defined as the following:

$$\mathscr{P} := \left\{ w \in \mathfrak{C}^\infty(\mathbb{R}, \mathbb{R}^{\mathsf{w}}) \mid \frac{\mathrm{d}^2 w}{\mathrm{d}t^2} - w = 0 \right\},$$

$$\mathscr{C} := \left\{ w \in \mathfrak{C}^\infty(\mathbb{R}, \mathbb{R}^{\mathsf{w}}) \mid \frac{\mathrm{d}w}{\mathrm{d}t} + w = 0 \right\}.$$

We can easily verify that $\mathscr{P}$ is an *autonomous* behavior [6], that is, any trajectory in $\mathscr{P}$ is completely characterized by its past. Moreover, this behavior has unstable exponential trajectories. Thus, $\mathscr{P}$ is an unstable autonomous behavior. Now, consider the interconnection $\mathscr{P}\|\mathscr{C}$, which consists of the trajectories in the intersection of $\mathscr{P}$ and $\mathscr{C}$, i.e. $\mathscr{P} \cap \mathscr{C}$. (Here, $\|$ denotes the interconnection of two *systems*, while $\cap$ denotes the intersection of the *behaviors* of the two systems.) For the above example, notice that the unstable trajectories in $\mathscr{P}$ (the trajectories that are not bounded as $t \to \infty$) do not belong to the interconnection $\mathscr{P}\|\mathscr{C}$. Moreover, since all trajectories in $\mathscr{P}\|\mathscr{C}$ are stable (i.e., $\lim_{t\to\infty} w(t) = 0$ for all elements w in $\mathscr{P}\|\mathscr{C}$) we infer that the interconnection of $\mathscr{P}$ and $\mathscr{C}$ yields a stable behavior. Therefore, if we do not add any further restrictions on the admissible controllers, it is perfectly possible that an autonomous unstable behavior is stabilized. Such controllers may be impossible to implement. More on this can be found in [14,3,10].

In order to cope with this, we introduce the concept of compatibility. With this concept, interconnections like the one in the previous paragraph are discounted. The control problem then becomes 'to find a compatible controller' instead of just 'to find any controller'.

A notion of compatibility for behavior interconnections in a general sense, not limited to just LTI systems, has been studied in [3]. For LTI systems, this general notion is related to the concept of *regular* interconnection, that has been introduced before in [14].

Consider a behavior $\mathfrak{B} \in \mathfrak{L}^{\mathsf{w}}$. Let $R(\mathrm{d}/\mathrm{d}t)w = 0$ be a minimal kernel representation of $\mathfrak{B}$. Being minimal, R has at least as many columns as it has rows. Let g be the number of rows. The number of columns is obviously w. Therefore, $\mathsf{g} \leqslant \mathsf{w}$. This means that we are always able to select g columns from R to form a square polynomial matrix with nonzero determinant. Notice that the selection is generally not unique. If we group together the components of $\mathbf{w}$ corresponding to the g selected rows and call them $\mathbf{y}$, and do similarly to the remaining $\mathsf{w} - \mathsf{g}$ components and call them $\mathbf{u}$, we end up with partitioning $\mathbf{w}$ into *output* $\mathbf{y}$ and *input* $\mathbf{u}$. The reason $\mathbf{u}$ is called input is because it is free, in the following sense. For any choice of $\mathfrak{C}^\infty$ input trajectory u, we can always find an output trajectory y such that $(u, y) \in \mathfrak{B}$. Notice that the number of inputs and outputs are properties of the behavior, and are independent of the minimal kernel representation used to represent the behavior. Therefore, we can define two maps m and p such that $\mathsf{m} : \mathfrak{L}^{\mathsf{w}} \to \{0, 1, \ldots, \mathsf{w}\}$ and $\mathsf{p} : \mathfrak{L}^{\mathsf{w}} \to \{0, 1, \ldots, \mathsf{w}\}$, which give the number of inputs and the number of outputs of a given behavior, respectively. Obviously, for any behavior $\mathfrak{B} \in \mathfrak{L}^{\mathsf{w}}$, we have that $\mathsf{m}(\mathfrak{B}) + \mathsf{p}(\mathfrak{B}) = \mathsf{w}$.

Definition 10. The interconnection of two behaviors $\mathfrak{B}_1$ and $\mathfrak{B}_2$ is said to be *regular* if

$$\mathsf{p}(\mathfrak{B}_1) + \mathsf{p}(\mathfrak{B}_2) = \mathsf{p}(\mathfrak{B}_1 \| \mathfrak{B}_2).$$

In a sense, regularity implies that the set of equations governing the dynamics of both behaviors are independent of each other.

We shall now apply regularity to the control problem. Recalling the definitions of the full plant behavior $\mathscr{P}_{\text{full}}$ and the controller behavior $\mathscr{C}$, we define the *full controlled behavior* $\mathscr{K}_{\text{full}}$ as

$$\mathscr{K}_{\text{full}} := \{(w, c) \in \mathscr{P}_{\text{full}} \mid c \in \mathscr{C}\}.$$

The interconnection between the plant and the controller is regular if

$$\mathsf{p}(\mathscr{P}_{\text{full}}) + \mathsf{p}(\mathscr{C}) = \mathsf{p}(\mathscr{K}_{\text{full}}).$$

If this is the case, then the controller $\mathscr{C}$ is called a *regular controller*.

It can be shown that a controller is regular if and only if it can be realized as a (possibly non-proper) transfer function from the output variables to the input variables of $\mathscr{P}_{\text{full}}$. Therefore, a controller is *regular* if it can be viewed as an "intelligent controller" that processes sensor outputs into actuator inputs. See [14] for more details.

Given the formulation of regular interconnection, we recast the question of implementability of $\mathscr{K}$ in the previous section into the question of *regular implementability* of $\mathscr{K}$.

Question. *Given* $\mathscr{P}_{\text{full}} \in \mathfrak{L}^{\mathbf{W}+\mathbf{C}}$, *which behaviors* $\mathscr{K} \in \mathfrak{L}^{\mathbf{W}}$ *can be implemented by using a suitable regular controller* $\mathscr{C} \in \mathfrak{L}^{\mathbf{C}}$?

It turns out that regular implementability involves controllability of the plant. For more on the concept of controllability from the behavioral systems theory point of view, we refer the reader to [6]. In fact, it has been proven in [4,14] that every implementable behavior $\mathscr{K}$ of a controllable plant $\mathscr{P}$ is regularly implementable.

A necessary and sufficient condition for regular implementability, even when the plant may not be controllable, is given in [2].

Theorem 11. *Given a full plant behavior* $\mathscr{P}_{\text{full}} \in \mathfrak{L}^{\mathbf{W}+\mathbf{C}}$. *Denote the hidden behavior and the manifest plant behavior as* $\mathscr{N}$ *and* $\mathscr{P}$ *respectively. Let* $\mathscr{P}_{\text{controllable}}$ *be the controllable part of* $\mathscr{P}$. *The behavior* $\mathscr{K} \in \mathfrak{L}^{\mathbf{W}}$ *is regularly implementable if and only if*

(1) $\mathscr{K}$ *is implementable, i.e.* $\mathscr{N} \subseteq \mathscr{K} \subseteq \mathscr{P}$ *and*
(2) $\mathscr{K} + \mathscr{P}_{\text{controllable}} = \mathscr{P}$.

Regular implementability of a behavior $\mathscr{K}$ implies the existence of at least one regular controller that implements it. In general, given a regularly implementable behavior, there exist irregular controllers that implement it. The question that we address in the rest of this section is: *Under what conditions on the plant* $\mathscr{P}_{\text{full}}$ *and the controlled behavior* $\mathscr{K}$, *can we conclude that every controller that implements* $\mathscr{K}$ *is regular?* It turns out that the answer to this question does not depend on $\mathscr{K}$, but just on the plant.

Define the *control variable plant behavior* $\mathscr{P}_c \in \mathfrak{L}^{\mathbf{C}}$ as follows:

$$\mathscr{P}_c := \{c \mid \exists\, w \text{ such that } (w, c) \in \mathscr{P}_{\text{full}}\}.$$

We have the following result.

Theorem 12. *Let* $\mathscr{P}_{\text{full}} \in \mathfrak{L}^{\mathbf{W}+\mathbf{C}}$ *be the full plant behavior. Given any controlled behavior* $\mathscr{K} \in \mathfrak{L}^{\mathbf{W}}$, *every controller* $\mathscr{C} \in \mathfrak{L}^{\mathbf{C}}$ *that implements* $\mathscr{K}$ *is a regular controller if and only if* $\mathscr{P}_c = \mathfrak{C}^{\infty}(\mathbb{R}, \mathbb{R}^{\mathbf{C}})$.

Proof. Let

$$R\left(\frac{\mathrm{d}}{\mathrm{d}t}\right) w + M\left(\frac{\mathrm{d}}{\mathrm{d}t}\right) c = 0$$

be a minimal kernel representation of $\mathscr{P}_{\text{full}}$. Note that $\mathscr{P}_c = \mathfrak{C}^{\infty}(\mathbb{R}, \mathbb{R}^{\mathbf{C}})$ is equivalent to R having full row rank.

(If) Take any controller $\mathscr{C} \in \mathfrak{L}^{\mathbf{C}}$. Let $C(\mathrm{d}/\mathrm{d}t)c = 0$ be its minimal kernel representation. Since R has full row rank, it follows that

$$\begin{pmatrix} R\left(\frac{\mathrm{d}}{\mathrm{d}t}\right) & M\left(\frac{\mathrm{d}}{\mathrm{d}t}\right) \\ 0 & C\left(\frac{\mathrm{d}}{\mathrm{d}t}\right) \end{pmatrix} \begin{pmatrix} w \\ c \end{pmatrix} = 0$$

is a minimal kernel representation of $\mathscr{K}_{\text{full}}$. Therefore,

$$\begin{aligned} \mathsf{p}(\mathscr{K}_{\text{full}}) &= \operatorname{rank} R + \operatorname{rank} C \\ &= \mathsf{p}(\mathscr{P}_{\text{full}}) + \mathsf{p}(\mathscr{C}). \end{aligned}$$

Hence the controller is regular.

(Only if) Suppose that $\mathscr{P}_c \neq \mathfrak{C}^{\infty}(\mathbb{R}, \mathbb{R}^{\mathbf{C}})$. Let $P(\mathrm{d}/\mathrm{d}t)c = 0$ be a minimal kernel representation of $\mathscr{P}_c$. Note that $P \neq 0$. It follows that if we choose a controller that has the same minimal kernel representation as $\mathscr{P}_c$, then the resulting interconnection is not regular. □

5. Control with the canonical controller

Let us revisit the formulation of the control problem for linear time-invariant systems. We are given a full plant behavior $\mathscr{P}_{\text{full}}$. Let

$$R\left(\frac{\mathrm{d}}{\mathrm{d}t}\right) w + M\left(\frac{\mathrm{d}}{\mathrm{d}t}\right) c = 0 \tag{7}$$

be a minimal kernel representation of $\mathscr{P}_{\text{full}}$. We are also given a desired controlled behavior $\mathscr{D}$, whose minimal kernel representation is $D(\mathrm{d}/\mathrm{d}t)w = 0$.

The behavior of the first canonical controller $\mathscr{C}'_{\text{canonical}} \in \mathfrak{L}^{\mathbf{C}}$ is defined as

$$\begin{aligned} \mathscr{C}'_{\text{canonical}} := \{c \in \mathfrak{C}^{\infty}(\mathbb{R}, \mathbb{R}^{\mathbf{C}}) \mid \exists\, v \in \mathbf{W} \\ \text{such that } (v, c) \in \mathscr{P}_{\text{full}} \text{ and } v \in \mathscr{D}\}. \end{aligned}$$

Obviously, a kernel representation for this controller can be obtained by eliminating v from the following kernel representation:

$$\begin{pmatrix} R\left(\frac{\mathrm{d}}{\mathrm{d}t}\right) & M\left(\frac{\mathrm{d}}{\mathrm{d}t}\right) \\ D\left(\frac{\mathrm{d}}{\mathrm{d}t}\right) & 0 \end{pmatrix} \begin{pmatrix} v \\ c \end{pmatrix} = 0. \tag{8}$$

The behavior of the second canonical controller is defined as

$$\mathscr{C}''_{\text{canonical}} := \{c \in \mathfrak{C}^\infty(\mathbb{R}, \mathbb{R}^{\mathbf{C}}) \mid \exists\, v \text{ such that } \begin{cases} \bullet (v, c) \in \mathscr{P}_{\text{full}}, \text{ and} \\ \bullet (v, c) \in \mathscr{P}_{\text{full}} \Rightarrow v \in \mathscr{D} \end{cases}\}. \tag{9}$$

Recall the fact that LTI behaviors satisfy the homogeneity property. For linear time-invariant differential systems, these two canonical controllers are essentially equivalent, as shown in the following theorem.

Theorem 13. *The following three statements are equivalent*:

(i) $\mathscr{C}'_{\text{canonical}} = \mathscr{C}''_{\text{canonical}}$.
(ii) *The second canonical controller* $\mathscr{C}''_{\text{canonical}}$ *is not empty*.
(iii) *The hidden behavior* $\mathscr{N}$ *is contained in the desired controlled behavior* $\mathscr{D}$, *i.e.* $\mathscr{N} \subseteq \mathscr{D}$.

Proof. We prove (i) $\Rightarrow$ (ii) $\Rightarrow$ (iii) $\Rightarrow$ (i).

(i) $\Rightarrow$ (ii): Notice that the zero trajectory is always contained in $\mathscr{C}'_{\text{canonical}}$, therefore $\mathscr{C}'_{\text{canonical}}$ is never empty.

(ii) $\Rightarrow$ (iii): We first prove that for any c_1 and c_2 in $\mathscr{C}''_{\text{canonical}}$, their linear combinations are also in $\mathscr{C}''_{\text{canonical}}$. Notice that from definition (9), it is not clear that this is the case. Suppose that c_1 and c_2 are in $\mathscr{C}''_{\text{canonical}}$. There exist w_1 and w_2, both in $\mathscr{D}$, such that (w_1, c_1) and (w_2, c_2) are both in $\mathscr{P}_{\text{full}}$. Now take any linear combination $\alpha_1 c_1 + \alpha_2 c_2$. For any w such that $(w, \alpha_1 c_1 + \alpha_2 c_2) \in \mathscr{P}_{\text{full}}$, the following reasoning holds:

$$\begin{aligned} &(w, \alpha_1 c_1 + \alpha_2 c_2) \in \mathscr{P}_{\text{full}} \\ &\quad \overset{\text{linearity of } \mathscr{P}_{\text{full}}}{\Rightarrow} (w - \alpha_1 w_1 - \alpha_2 w_2 + w_1, c_1) \in \mathscr{P}_{\text{full}}, \\ &\quad \overset{\text{property of } \mathscr{C}''_{\text{canonical}}}{\Rightarrow} (w - \alpha_1 w_1 - \alpha_2 w_2 + w_1) \in \mathscr{D}, \\ &\quad \overset{\text{linearity of } \mathscr{D}}{\Rightarrow} w \in \mathscr{D}. \end{aligned}$$

Hence, if $\mathscr{C}''_{\text{canonical}}$ is nonempty, it is obvious that the zero trajectory is included in $\mathscr{C}''_{\text{canonical}}$. Let $\mathscr{K}''_{\text{canonical}}$ be the controlled behavior implemented by $\mathscr{C}''_{\text{canonical}}$. Since $0 \in \mathscr{C}''_{\text{canonical}}$, we have that $\mathscr{N} \subseteq \mathscr{K}''_{\text{canonical}}$. From Theorem 5 we also know that $\mathscr{K}''_{\text{canonical}} \subseteq \mathscr{D}$. Hence $\mathscr{N} \subseteq \mathscr{D}$.

(iii) $\Rightarrow$ (i): Take any $c \in \mathscr{C}'_{\text{canonical}}$. There exists a $w \in \mathscr{D}$ such that $(w, c) \in \mathscr{P}_{\text{full}}$. Take any other w' such that $(w', c) \in \mathscr{P}_{\text{full}}$, then we also have $(w - w', 0) \in \mathscr{P}_{\text{full}}$. Therefore $(w - w') \in \mathscr{N} \subseteq \mathscr{D}$. By the linearity of $\mathscr{D}$, we conclude that $w' \in \mathscr{D}$ and therefore $c \in \mathscr{C}''_{\text{canonical}}$. We have shown that $\mathscr{C}'_{\text{canonical}} \subseteq \mathscr{C}''_{\text{canonical}}$. The converse is obvious from the definitions of the canonical controllers. □

This theorem implies that if the control problem is solvable, then the two canonical controllers are equal. Motivated by this theorem, we shall consider in the subsequent discussion only the first canonical controller $\mathscr{C}'_{\text{canonical}}$. The question what controlled behavior is actually implemented by the canonical controller is answered by the following theorem.

Theorem 14. *Consider* $\mathscr{P}_{\text{full}} \in \mathfrak{L}^{\mathbf{W}+\mathbf{C}}$ *and* $\mathscr{D} \in \mathfrak{L}^{\mathbf{W}}$. *The controlled behavior* $\mathscr{K}$ *implemented by the canonical controller* $\mathscr{C}'_{\text{canonical}} \in \mathfrak{L}^{\mathbf{C}}$ *is*

$$\mathscr{K} = \mathscr{N} + \mathscr{D} \cap \mathscr{P}$$

with $\mathscr{N}$ *the hidden behavior and* $\mathscr{P}$ *the manifest plant behavior*.

Proof. Let the kernel representation of $\mathscr{P}_{\text{full}}$ be given by (7), and let $\mathscr{D}$ be represented by $D(\mathrm{d}/\mathrm{d}t)w = 0$. We then know that a kernel representation of $\mathscr{C}'_{\text{canonical}}$ can be obtained by eliminating w from (8). Therefore, $\mathscr{K}$ is the manifest behavior (with $\mathbf{w}$ as the manifest variable) of the behavior represented by

$$\begin{bmatrix} R\left(\frac{\mathrm{d}}{\mathrm{d}t}\right) & M\left(\frac{\mathrm{d}}{\mathrm{d}t}\right) & 0 \\ 0 & M\left(\frac{\mathrm{d}}{\mathrm{d}t}\right) & R\left(\frac{\mathrm{d}}{\mathrm{d}t}\right) \\ 0 & 0 & D\left(\frac{\mathrm{d}}{\mathrm{d}t}\right) \end{bmatrix} \begin{bmatrix} w \\ c \\ v \end{bmatrix} = 0.$$

Notice that $\mathscr{K}$ is then also the manifest behavior (with $\mathbf{w}$ as the manifest variable) of the behavior represented by

$$\begin{bmatrix} R\left(\frac{\mathrm{d}}{\mathrm{d}t}\right) & 0 & 0 \\ 0 & M\left(\frac{\mathrm{d}}{\mathrm{d}t}\right) & R\left(\frac{\mathrm{d}}{\mathrm{d}t}\right) \\ 0 & 0 & D\left(\frac{\mathrm{d}}{\mathrm{d}t}\right) \end{bmatrix} \begin{bmatrix} w - v \\ c \\ v \end{bmatrix} = 0. \tag{10}$$

Now define $w' := w - v$, we can see from (10) that the dynamics of w' is decoupled from that of c and v. Furthermore, the behavior of w' is exactly $\mathscr{N}$ (see Section 3). The second and third rows of (10) indicate that the behavior of v, which is obtained by eliminating c, is $\mathscr{D} \cap \mathscr{P}$. From here, using the fact

that $w = w' + v$, we obtain

$\mathscr{K} = \mathscr{N} + \mathscr{D} \cap \mathscr{P}$. $\square$

This result is not unexpected. In fact, we can see it as an application of Theorem 2 to the special case of LTI behaviors. Similarly, we can apply Corollary 4 to LTI systems to obtain the following corollary.

Corollary 15. *The canonical controller* $\mathscr{C}'_{\text{canonical}} \in \mathfrak{L}^{\mathbf{C}}$ *implements* $\mathscr{D} \in \mathfrak{L}^{\mathbf{W}}$ *if and only if* $\mathscr{D}$ *is implementable, i.e.* $\mathscr{N} \subseteq \mathscr{D} \subseteq \mathscr{P}$.

So far we have seen that when $\mathscr{D}$ is implementable, the canonical controller $\mathscr{C}'_{\text{canonical}}$ implements it. However, as we have seen in Section 4, implementability alone may not be good enough. In the following we shall address the issue of regularity of the canonical controller $\mathscr{C}'_{\text{canonical}}$.

Theorem 16. *Given a full plant behavior* $\mathscr{P}_{\text{full}} \in \mathfrak{L}^{\mathbf{W}+\mathbf{C}}$ *and a desired controlled behavior* $\mathscr{D} \in \mathfrak{L}^{\mathbf{W}}$. *Assume that* $\mathscr{D}$ *is implementable. The canonical controller* $\mathscr{C}'_{\text{canonical}}$ *implements* $\mathscr{D}$ *regularly if and only if* $\mathscr{P}_c = \mathfrak{C}^{\infty}(\mathbb{R}, \mathbb{R}^{\mathbf{C}})$.

Proof. (If) Follows directly from Theorem 12.

(Only if) Without loss of generality, we can assume that $\mathscr{P}_{\text{full}}$ has a minimal kernel representation of the following form.

$$\begin{bmatrix} R_1\left(\frac{\mathrm{d}}{\mathrm{d}t}\right) & M_1\left(\frac{\mathrm{d}}{\mathrm{d}t}\right) \\ 0 & M_2\left(\frac{\mathrm{d}}{\mathrm{d}t}\right) \end{bmatrix} \begin{bmatrix} w \\ c \end{bmatrix} = 0,$$

with both R_1 and M_2 having full row rank. The kernel representations of $\mathscr{N}$ and $\mathscr{P}_c$ are then given by $R_1(\mathrm{d}/\mathrm{d}t)w = 0$ and $M_2(\mathrm{d}/\mathrm{d}t)c = 0$, respectively. Since $\mathscr{N} \subseteq \mathscr{D}$, we are able to find a suitable full row rank matrix $F(\mathrm{d}/\mathrm{d}t)$ such that $F(\mathrm{d}/\mathrm{d}t)R_1(\mathrm{d}/\mathrm{d}t)w = 0$ is a minimal kernel representation of $\mathscr{D}$. Therefore a kernel representation of the canonical controller $\mathscr{C}'_{\text{canonical}}$ can be obtained by eliminating v from

$$\begin{bmatrix} R_1\left(\frac{\mathrm{d}}{\mathrm{d}t}\right) & M_1\left(\frac{\mathrm{d}}{\mathrm{d}t}\right) \\ 0 & M_2\left(\frac{\mathrm{d}}{\mathrm{d}t}\right) \\ F\left(\frac{\mathrm{d}}{\mathrm{d}t}\right) R_1\left(\frac{\mathrm{d}}{\mathrm{d}t}\right) & 0 \end{bmatrix} \begin{bmatrix} v \\ c \end{bmatrix} = 0.$$

Since R_1 has full row rank, we easily obtain the following kernel representation of $\mathscr{C}'_{\text{canonical}}$ (possibly non-minimal).

$$\begin{bmatrix} M_2\left(\frac{\mathrm{d}}{\mathrm{d}t}\right) \\ F\left(\frac{\mathrm{d}}{\mathrm{d}t}\right) M_1\left(\frac{\mathrm{d}}{\mathrm{d}t}\right) \end{bmatrix} c = 0.$$

We see that $\mathscr{C}'_{\text{canonical}}$ always repeats some laws of $\mathscr{P}_{\text{full}}$, namely the rows in M_2. Thus $\mathscr{C}'_{\text{canonical}}$ is regular only if M_2 is the zero matrix, which implies $\mathscr{P}_c = \mathfrak{C}^{\infty}(\mathbb{R}, \mathbb{R}^{\mathbf{C}})$. $\square$

This result, combined with Theorem 12, tells us that the canonical controller is *maximally irregular*, in the sense that if there exists any irregular controller that implements the desired behavior $\mathscr{D}$, then the canonical controller is irregular too.

6. Concluding remarks

The idea of the canonical controller in the behavioral framework is attractive because of its simplicity of construction and also since it formalizes the 'internal model principle' without undue recourse to the 'equations' with which the plant is described. This approach of building systems without using the equations explicitly underlines the *representation free* nature of behavioral theory. Some specific issues are summarized here to highlight the main results of the paper.

We defined two canonical controllers. For the case of linear time-invariant behaviors (or more generally, for plants with homogeneity property), when the desired behavior $\mathscr{D}$ is implementable, the canonical controllers are the same (see Theorem 13). However, they can differ when $\mathscr{D}$ is not implementable. In this situation each of the two canonical controllers are extreme in a certain sense. The first canonical controller implements the smallest implementable behavior that contains $\mathscr{P} \cap \mathscr{D}$. The second canonical controller $\mathscr{C}''_{\text{canonical}}$ implements the largest implementable behavior contained in $\mathscr{D}$. These statements were formulated and proved in Theorems 2 and 5, respectively.

For the case of linear time-invariant behaviors, the implementability of $\mathscr{D}$ implies non-emptiness of $\mathscr{C}''_{\text{canonical}}$ (Theorem 13). When $\mathscr{C}''_{\text{canonical}}$ is non-empty, it is a linear subspace of $\mathfrak{C}^{\infty}(\mathbb{R}, \mathbb{R}^{\bullet})$, and hence contains the zero trajectory. Thus, we have a *necessary* condition for implementability of $\mathscr{D}$, namely if the zero trajectory belongs to $\mathscr{C}''_{\text{canonical}}$.

We then addressed the issue of regularity of a controller with respect to a given plant. It turns out that the condition of guaranteed regularity of every controller that implements a given desired behavior, is a property of just the plant, and is independent of the given desired behavior.

The issues of regularity of every controller and the canonical controllers are related by the results in the final section. Here we showed that, given a plant, irregularity of any controller implies irregularity of the canonical controller, and hence we termed the canonical controller as *maximally irregular*.

Acknowledgements

This research is supported by the Dutch NWO Project No. 617.023.002, Compositional Analysis and Specification of Hybrid Systems, by the Belgian Federal Government under the DWTC program Interuniversity Attraction Poles, Phase V, 2002–2006, Dynamical Systems and Control: Computation, Identification and Modelling, by the KUL Concerted Research Action (GOA) MEFISTO–666, and by several grants and projects from IWT-Flanders and the Flemish Fund for Scientific Research.

References

[1] M.N. Belur, Control in a behavioral context, Ph.D. Thesis, University of Groningen, June 2003.

[2] M.N. Belur, H.L. Trentelman, Stabilization, pole placement and regular implementability, IEEE Trans. Automat. Control 47 (2002) 735–744.

[3] A.A. Julius, A.J. van der Schaft, Compatibility of behavior interconnections, in: Proceedings of the European Control Conference, Cambridge, IEE, London, September 2003.

[4] J.W. Polderman, Sequential continuous time adaptive control: a behavioral approach, in: Proceedings of the 39th IEEE Conference on Decision and Control, Sydney, IEEE, New York, 2000, pp. 2484–2487.

[5] J.W. Polderman, I. Mareels, A behavioral approach to adaptive control, in: J.W. Polderman, H.L. Trentelman (Eds.), Mathematics of System and Control, Festschrift on the occasion of the 60th birthday of J.C. Willems, Groningen, 1999, pp. 119–130.

[6] J.W. Polderman, J.C. Willems, Introduction to Mathematical Systems Theory: A Behavioral Approach, Springer, New York, 1998.

[7] P. Rocha, Regular implementability of nD behaviors, in: Proceedings of Mathematical Theory of Networks and Systems, University of Notre Dame, 2002.

[8] H.L. Trentelman, A truly behavioral approch to the control problem, in: J.W. Polderman, H.L. Trentelman (Eds.), Mathematics of System and Control, Festschrift on the occasion of the 60th birthday of J.C. Willems, Groningen, 1999, pp. 177–190.

[9] H.L. Trentelman, J.C. Willems, Synthesis of dissipative systems using quadratic differential forms: part II, IEEE Trans. Automat. Control 47 (2002) 70–86.

[10] A.J. van der Schaft, Achievable behavior of general systems, Systems Control Lett. 49 (2003) 141–149.

[11] A.J. van der Schaft, A.A. Julius, Achievable behavior by composition, in: Proceedings of the 41st IEEE Conference on Decision and Control, Las Vegas, IEEE, New York, 2002, pp. 7–12.

[12] J.C. Willems, http://www.esat.kuleuven.ac.be/~jwillems.

[13] J.C. Willems, Paradigms and puzzles in the theory of dynamical systems, IEEE Trans. Automat. Control 36 (1991) 259–294.

[14] J.C. Willems, On interconnections, control and feedback, IEEE Trans. Automat. Control 42 (1997) 326–339.

[15] J.C. Willems, Behaviors, latent variables, and interconnections, Systems Control Inform. (Japan) 43 (1999) 453–464.

[16] J.C. Willems, M.N. Belur, A.A. Julius, H.L. Trentelman, The canonical controller and its regularity, in: Proceedings of the IEEE Conference on Decision and Control, Hawaii, December 2003, pp. 1639–1644.

[17] J.C. Willems, H.L. Trentelman, Synthesis of dissipative systems using quadratic differential forms, Part I, IEEE Trans. Automat. Control 47 (2002) 53–69.