# DISSIPATIVITY AND STABILITY OF INTERCONNECTIONS

**Jan C. Willems**[*] and **Kiyotsugu Takaba**[†]

**Abstract**

A new definition of dissipativity is proposed. It is purely in terms of the rate of supply that goes in and out of a system. It is proven that dissipativity is equivalent to the existence of a non-negative storage function. Several results regarding the dissipativity of systems defined by quadratic differential forms are given, and some open questions are mentioned. These ideas are finally applied to the question of stability of interconnected systems.

# 1 Introduction

It is a pleasure to contribute this article to a special issue on the occasion of the 80-th birthday of V.A.Yakubovich, and to wish him a happy birthday and many more years in good health. This article deals, among other things, with issues of frequency domain inequalities, an area of control theory which was founded by V.A.Yakubovich and that has become one of the most influential research areas of the field.

Lyapunov functions are pervasive in many areas of applied mathematics, especially in systems and control theory. It is the main technique for proving stability results. However, the trademark of systems theory is that it studies systems that are 'open' and 'connected', but neither of these aspects is present in the notion of a Lyapunov function, which aims at the autonomous dynamics of closed systems. The notion that generalizes Lyapunov functions to open systems is that of a 'dissipative system'. The aim of this article is to present a modern view of this concept, and apply it to stability of interconnected systems.

The notion of a dissipative system that was introduced in [17] refers to input/state/output models

$$\frac{d}{dt}\mathrm{x} = f(\mathrm{x},\mathrm{u}), \quad \mathrm{y} = g(\mathrm{x},\mathrm{u}).$$

The definition involves

(i) a *supply rate* $s(\mathrm{u},\mathrm{y})$, a memoryless function of the input and the output variables,

(ii) a *storage function* $V(\mathrm{x})$, a non-negative memoryless function of the state, and

(iii) the *dissipation inequality* which states that the increase of the storage between two times cannot exceed the integral of the supply rate:

$$V\big(x(t_1)\big) - V\big(x(t_0)\big) \leq \int_{t_0}^{t_1} s\big(u(t), y(t)\big)\, dt,$$

for all $t_0 \geq t_1$, and all trajectories $\big(u(\cdot), y(\cdot), x(\cdot)\big)$ that satisfy the dynamical equations.

[*]ESAT-SISTA, K.U. Leuven, Kasteelpark Arenberg 10, B-3001 Leuven, Belgium.
Jan.Willems@esat.kuleuven.be; http://www.esat.kuleuven.ac.be/∼jwillems

[†]Department of Applied Mathematics and Physics, Kyoto University, Kyoto 606–8501, Japan.
takaba@amp.i.kyoto-u.ac.jp; http://seigyo.amp.i.kyoto-u.ac.jp/∼takaba

When the input is absent, and $s = 0$, this reduces to $\frac{d}{dt}V\big(x(\cdot)\big) \leq 0$. Hence dissipativity generalizes the idea of a Lyapunov function to 'open' systems. This idea has found applications in many areas of systems theory.

There are issues that can be raised regarding the definition just given. One is the question if one really wants non-negativity (equivalently, boundedness from below) of the storage function. Indeed, there are many applications (stored energy in mechanics, entropy in thermodynamics) where this is not a desirable assumption. On the other hand, in the context of stability, non-negativity of the storage function is often needed. We will therefore pay particular attention to storage functions that are non-negative. Other issues with this definition are that it starts with an input/output partition of the variables that carry the supply rate, and with a state representation of the dynamical system. Also, it assumes from the start that the storage is a function of the state. As we have discussed before, and will return to later, the input/output partition is not a natural assumption when applied to physical systems, and knowledge of the state space is an awkward assumption, for example, for a first principles model, or when applied in the context of uncertain systems. Finally, it is desirable to understand if, and, if so, in what sense, the storage function is a state function. In other words, it is desirable to make the issue that the storage function is a memoryless function of the state a matter of proof, not an assumption.

A few words about the mathematical notation used. We use standard symbols for $\mathbb{R}$, $\mathbb{C}$, $\mathbb{R}^{\mathtt{n}}$, $\mathbb{R}^{\mathtt{n}\times\mathtt{m}}$, etc. $\bar{}$ denotes complex conjugation. When the number of rows or columns is immaterial (but finite), we use $\mathbb{R}^{\bullet}$, $\mathbb{R}^{\bullet\times\mathtt{n}}$, etc. $\mathbb{R}[\xi]$ denotes the set of polynomials with real coefficients in the indeterminate $\xi$, and $\mathbb{R}(\xi)$ denotes the set of real rational functions in the indeterminate $\xi$. $\mathbb{R}[\zeta,\eta]$ denotes the set two-variable polynomial matrices in the indeterminates $\zeta$ and $\eta$. $\mathscr{C}^\infty(\mathbb{R},\mathbb{R}^{\mathtt{n}})$ denotes the set of infinitely differentiable functions from $\mathbb{R}$ to $\mathbb{R}^{\mathtt{n}}$. $\mathscr{D}^\infty(\mathbb{R},\mathbb{R}^{\mathtt{n}})$ denotes the subset of $\mathscr{C}^\infty(\mathbb{R},\mathbb{R}^{\mathtt{w}})$ consisting of the functions that have compact support. We use $|\cdot|$ for a norm on a finite dimensional space, and $\|\cdot\|$ for a norm in a function space.

In the behavioral approach, a dynamical system is characterized by its behavior. The behavior is the set of trajectories which meet the dynamical laws of the system. Formally, dynamical systems $\Sigma$ is defined by $\Sigma = (\mathbb{T},\mathbb{W},\mathscr{B})$, with $\mathbb{T}\subseteq\mathbb{R}$ the time-set, $\mathbb{W}$ the signal space, and $\mathscr{B}\subseteq\mathbb{W}^{\mathbb{T}}$ the *behavior*. See [16, 18] for motivation and details. In the continuous-time setting, the behavior of a dynamical system is typically defined by the set of all solutions to a system of differential(-algebraic) equations.

A latent variable dynamical system is a refinement of the notion of a dynamical system, in which the behavior is represented with the aid of auxiliary variables, called *latent variables*. Formally, a *latent variable dynamical system* is defined by $\Sigma_L = (\mathbb{T},\mathbb{W},\mathbb{L},\mathscr{B}_{\text{full}})$ with $\mathbb{T}\subseteq\mathbb{R}$ the time-set, $\mathbb{W}$ the signal space, $\mathbb{L}$ the space of latent variables, and $\mathscr{B}\subseteq(\mathbb{W}\times\mathbb{L})^{\mathbb{T}}$ the *full behavior*. The behavior $\mathscr{B}_{\text{full}}$ consists of the trajectories $(w,\ell):\mathbb{T}\to\mathbb{W}\times\mathbb{L}$ which are compatible with the laws of the system. These involve both the manifest variables $w$ and the latent variables $\ell$. $\Sigma_L$ induces the dynamical system $\Sigma = (\mathbb{T},\mathbb{W},\mathscr{B})$ with *manifest behavior*

$$\mathscr{B} = \big\{w:\mathbb{T}\to\mathbb{W} \;\big|\; \exists\,\ell:\mathbb{T}\to\mathbb{L} \text{ such that } (w,\ell)\in\mathscr{B}_{\text{full}}\big\}.$$

The motivation of this concept is that in first principle models, the behavioral equations invariably contain auxiliary ('latent') variables (state variables being the best known examples, but interconnection variables the most prevalent ones) in addition to the ('manifest') variables the model aims at. We will soon see that latent variable representations function very well in the context of dissipative systems, for distinguishing the 'external' supply rate from the 'internal' storage function.

# 2 Dissipative systems

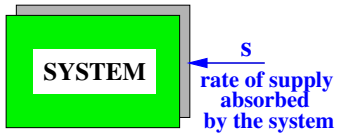


**Figure 1.** The system and the supply rate

We now give a new 'no frills' definition of dissipativity. It is stated in the language of behaviors, and it is exceedingly simple. The basic idea is the following (see figure 1). We assume we have a dynamical system that exchanges supply (of energy, or mass, or whatever is relevant for the situation at hand) with its environment. This exchange is expressed by a (real-valued) supply rate, which is taken to be positive when supply flows into the system. Dissipativity states that the maximum amount of supply that is ever extracted along a particular trajectory is bounded. More precisely, for any trajectory, and starting at a particular time, the net amount of supply that flows out of the system cannot be arbitrarily large. In other words, supply cannot be produced in infinite supply by the system. Everything that can be extracted must in a sense have been stored at the initial time.

**Definition 1.** *Let $\Sigma = (\mathbb{R}, \mathbb{R}, \mathscr{B})$ be a dynamical system. A trajectory $s : \mathbb{R} \to \mathbb{R}$, $s \in \mathscr{B}$, models the rate of supply absorbed by the system. $\Sigma$ is said to be* dissipative *if (i) $\mathscr{B} \subseteq \mathscr{L}^{\mathrm{loc}}(\mathbb{R}, \mathbb{R})$ and (ii)*

$$\forall s \in \mathscr{B} \text{ and } \forall t_0 \in \mathbb{R},\ \exists K \in \mathbb{R},\ \text{ such that } -\int_{t_0}^{T} s(t)\, dt \leq K \text{ for } T \geq t_0.$$

A special case that leads to dissipativity is when $[\![ s \in \mathscr{B} ]\!] \Rightarrow [\![ \int_{-\infty}^{t} s(t')\, dt' \geq 0 \ \forall t \in \mathbb{R} ]\!]$. This situation is relevant when all $s \in \mathscr{B}$ have compact support on the left (this can be viewed as systems that start 'at rest'), or when all $s \in \mathscr{B}$ are integrable on any left half-line. More generally, dissipativity follows if for all $s \in \mathscr{B}$ there exists $s' \in \mathscr{B}$ such that $s(t) = s'(t)$ for $t < 0$, and with $\int_{-\infty}^{t} s'(t')\, dt' \geq 0$ for all $t \in \mathbb{R}$.

We will soon prove a proposition which states that this definition is equivalent to the existence of a non-negative storage function. The notion of storage function is stated in the language of latent variable representations of dynamical systems.

**Definition 2.** *Let $\Sigma_L = (\mathbb{R}, \mathbb{R}, \mathbb{R}, \mathscr{B}_{\mathrm{full}})$ be a latent variable dynamical system. The component $s : \mathbb{R} \to \mathbb{R}$ of a trajectory $(s, V) \in \mathscr{B}_{\mathrm{full}}$ models the rate of supply absorbed by the system, while the component $V : \mathbb{R} \to \mathbb{R}$ models the supply stored. $V$ is said to be a* storage function *if $\forall\, (s, V) \in \mathscr{B}_{\mathrm{full}}$ and $\forall t_0, t_1 \in \mathbb{R}, t_0 \leq t_1$, the* dissipation inequality

$$V(t_1) - V(t_0) \leq \int_{t_0}^{t_1} s(t)\, dt \qquad \text{(DIneq)}$$

*holds.*

We now prove that dissipativity is equivalent to the existence of a non-negative storage function.

**Proposition 3.** *The dynamical system $\Sigma = (\mathbb{R}, \mathbb{R}, \mathscr{B})$ is dissipative iff there exists a latent variable dynamical system $\Sigma_L = (\mathbb{R}, \mathbb{R}, \mathbb{R}, \mathscr{B}_{\mathrm{full}})$ with manifest behavior $\mathscr{B}$ such that the latent variable component of $(s, V) \in \mathscr{B}_{\mathrm{full}}$ is a non-negative storage function.*

**Proof.** (if): Assume that $\Sigma_L = (\mathbb{R}, \mathbb{R}_+, \mathbb{R}, \mathscr{B}_{\mathrm{full}})$ satisfies (DIneq), has manifest behavior $\mathscr{B}$, and $V \geq 0$. Then

$$\forall s \in \mathscr{B} \text{ and } \forall t_0 \in \mathbb{R}, -\int_{t_0}^{T} s(t)\, dt \leq V(t_0) - V(T) \leq V(t_0), \text{ for } T \geq t_0.$$

This shows that $\Sigma = (\mathbb{R}, \mathbb{R}, \mathscr{B})$ is dissipative (take $K = V(t_0)$ in definition 1).
(only if): Conversely, assume that $\Sigma = (\mathbb{R}, \mathbb{R}, \mathscr{B})$ is dissipative. Now define, for each trajectory $s \in \mathscr{B}$, an associated trajectory $V : \mathbb{R} \to \mathbb{R}$, as follows:

$$V(t) = \sup \left\{ -\int_t^T s(t)\, dt \;\middle|\; T \geq t \right\}.$$

Obviously (take $T = t$ in the sup), $V \geq 0$. Since $\Sigma = (\mathbb{R}, \mathbb{R}, \mathscr{B})$ is dissipative, $V(t) < \infty$ (in fact, $V(t_0) \leq K$, with $K$ as in definition 1). Hence, with the $(s, V)$'s so defined, we obtain a latent variable dynamical system $\Sigma_L = (\mathbb{R}, \mathbb{R}, \mathbb{R}, \mathscr{B}_{\text{full}})$ with manifest behavior $\mathscr{B}$. For $w \in \mathscr{B}$ and $t_0 \geq t_1$, there holds

$$\begin{aligned} V(t_0) &= \sup \left\{ -\int_{t_0}^T s(t)\, dt \;\middle|\; T \geq t_0 \right\} \\ &\geq -\int_{t_0}^{t_1} s(t)\, dt + \sup \left\{ -\int_{t_1}^T s(t)\, dt \;\middle|\; T \geq t_1 \right\} \\ &= -\int_{t_0}^{t_1} s(t)\, dt + V(t_1). \end{aligned}$$

This proves the dissipation inequality. ∎

We do not know a simple condition for the existence of *any* storage function (not necessarily non-negative, or what is equivalent, not necessarily bounded from below). We state this as an open problem.

**Open problem 1.** *Under what conditions on the behavior of the dynamical system $\Sigma = (\mathbb{R}, \mathbb{R}, \mathscr{B})$ does there exists a latent variable dynamical system $\Sigma_L = (\mathbb{R}, \mathbb{R}, \mathbb{R}, \mathscr{B}_{\text{full}})$ with manifest behavior $\mathscr{B}$ such that the latent variable component of $(s, V) \in \mathscr{B}_{\text{full}}$ is a storage function, i.e. such that the dissipation inequality is satisfied?*

# 3 QDF's as supply rates

Definition 1 gives an unencumbered, clean definition of dissipativity. It simply looks at the rate at which supply goes in and out of a system, and by considering all possible supply rate histories, comes up with a definition of dissipativity. The question arises: *Is this definition too general?* Does it recover the KYP-lemma, positive realness, bounded realness? What does it say in the linear-quadratic case? Is it effective in stability analysis?

In this section, we examine the situation when the supply rate is generated by a quadratic form in a vector variable and its derivatives. However, it is convenient to recall first some basic notions and notation concerning linear time-invariant differential systems. A *linear time-invariant differential system* is a dynamical system $\Sigma = (\mathbb{R}, \mathbb{W}, \mathscr{B})$, with $\mathbb{W} = \mathbb{R}^{\mathtt{w}}$ a finite-dimensional (real) vector space, whose behavior consists of the solutions of a system of differential equations of the form

$$R_0 w + R_1 \frac{d}{dt} w + \cdots + R_{\mathtt{n}} \frac{d^{\mathtt{n}}}{dt^{\mathtt{n}}} w = 0,$$

with $R_0, R_1, \ldots, R_n$ matrices of appropriate size that specify the system parameters, and $w : \mathbb{R} \to \mathbb{R}$, the vector of system variables. It is convenient to denote the above system of differential equations using a polynomial matrix as $R\left(\frac{d}{dt}\right) w = 0$, with $R \in \mathbb{R}^{\bullet \times \mathtt{w}}[\xi]$ a real polynomial matrix with $\mathtt{w}$ columns. The behavior of this system is defined as the set of this system of differential equations, i.e.

$$\mathscr{B} = \{ w : \mathbb{R} \to \mathbb{R}^{\mathtt{w}} \,|\, R\left(\frac{d}{dt}\right) w = 0 \}.$$

The precise definition of when we consider $w:\mathbb{R}\to\mathbb{R}^{\mathtt{w}}$ to be a solution of $R\left(\frac{d}{dt}\right)w=0$ is an issue that is often of secondary importance. For the purposes of the present paper, it is convenient to consider solutions in $\mathscr{C}^\infty(\mathbb{R},\mathbb{R}^{\mathtt{w}})$. Since $\mathscr{B}$ is the kernel of the differential operator $R(\frac{d}{dt})$, we often write $\mathscr{B}=\ker\left(R\left(\frac{d}{dt}\right)\right)$, and call $R\left(\frac{d}{dt}\right)w=0$ a *kernel representation* of the associated linear time-invariant differential system. We denote this set of differential systems or their behaviors by $\mathscr{L}^{\bullet}$, or by $\mathscr{L}^{\mathtt{w}}$ when the number of variables is $\mathtt{w}$.

We know a great deal about linear time-invariant differential systems. Important for the purposes of the present paper are the following facts. We refer the uninitiated reader to [16, 18] for definitions, proofs, and other details. Some of the salient results which will be used in the sequel are:

1. The *elimination theorem* which states that the manifest behavior of $R\left(\frac{d}{dt}\right)w=M\left(\frac{d}{dt}\right)\ell$ with $R,M\in\mathbb{R}^{\bullet\times\bullet}[\xi]$ is itself an element of $\mathscr{L}^{\bullet}$.

2. A system in $\mathscr{L}^{\bullet}$ is controllable (defined in the appealing way in which it is used in the behavioral setting) iff it admits an *image representation* $w=M\left(\frac{d}{dt}\right)\ell$, i.e. its behavior is $\mathscr{B}=\mathrm{im}\left(M\left(\frac{d}{dt}\right)\right)$ for some $M\in\mathbb{R}^{\bullet\times\bullet}[\xi]$.

3. Every system in $\mathscr{L}^{\mathtt{w}}$ admits a componentwise *input/output partition*, a finite-dimensional *state representation*, and an *input/state/output representation*.

**Definition 4.** *A* quadratic differential form (QDF) *is a finite sum of quadratic expressions of the components of a vector-valued function $w\in\mathscr{C}^\infty(\mathbb{R},\mathbb{R}^{\mathtt{w}})$ and its derivatives:*

$$\Sigma_{\mathtt{r},\mathtt{k}}\left(\frac{d^{\mathtt{r}}}{dt^{\mathtt{r}}}w\right)^{\top}\Phi_{\mathtt{r},\mathtt{k}}\left(\frac{d^{\mathtt{k}}}{dt^{\mathtt{k}}}w\right),$$

*with the $\Phi_{\mathtt{r},\mathtt{k}}\in\mathbb{R}^{\mathtt{w}\times\mathtt{w}}$. Note that this defines a map from $\mathscr{C}^\infty(\mathbb{R},\mathbb{R}^{\mathtt{w}})\to\mathscr{C}^\infty(\mathbb{R},\mathbb{R})$.*

Two-variable polynomial matrices lead to a compact notation and a convenient calculus for QDF's. Introduce the two-variable polynomial matrix $\Phi$ given by

$$\Phi(\zeta,\eta)=\Sigma_{\mathtt{r},\mathtt{k}}\,\Phi_{\mathtt{r},\mathtt{k}}\zeta^{\mathtt{r}}\eta^{\mathtt{k}},$$

and denote the above expression by $\mathsf{Q}_\Phi(w)$. Hence

$$\mathsf{Q}_\Phi:\mathscr{C}^\infty(\mathbb{R},\mathbb{R}^{\mathtt{w}})\to\mathscr{C}^\infty(\mathbb{R},\mathbb{R}),\quad w\mapsto\Sigma_{\mathtt{r},\mathtt{k}}\left(\frac{d^{\mathtt{r}}}{dt^{\mathtt{r}}}w\right)^{\top}\Phi_{\mathtt{r},\mathtt{k}}\left(\frac{d^{\mathtt{k}}}{dt^{\mathtt{k}}}w\right)=:\mathsf{Q}_\Phi(w).$$

Call $\Phi^\star$, defined by $\Phi^\star(\zeta,\eta):=\Phi^\top(\eta,\zeta)$, the *dual* of $\Phi$; $\Phi\in\mathbb{R}^{\mathtt{w}\times\mathtt{w}}[\zeta,\eta]$ is called $[\![$*symmetric*$]\!]:\Leftrightarrow[\![\Phi=\Phi^\star]\!]$. Obviously, $\mathsf{Q}_\Phi(w)=\mathsf{Q}_{\Phi^\star}(w)=\mathsf{Q}_{\frac{1}{2}(\Phi+\Phi^\star)}(w)$, which shows that in QDF's we can assume, without loss of generality, that $\Phi$ is symmetric. The QDF $\mathsf{Q}_\Phi$ is said to be $[\![$*non-negative*$]\!]$ (denoted $\mathsf{Q}_\Phi\geq 0$) $:\Leftrightarrow[\![\mathsf{Q}_\Phi(w)(0)\geq 0$ for all $w\in\mathscr{C}^\infty(\mathbb{R},\mathbb{R}^{\mathtt{w}})]\!]$.

QDF's have been studied in depth in [20]. Associate with $\Phi=\Phi^\star\in\mathbb{R}^{\mathtt{w}\times\mathtt{w}}[\zeta,\eta],\Phi(\zeta,\eta)=\Sigma_{\mathtt{r},\mathtt{k}}\,\Phi_{\mathtt{r},\mathtt{k}}\zeta^{\mathtt{r}}\eta^{\mathtt{k}}$, the matrix

$$\tilde{\Phi}=\begin{bmatrix}\Phi_{0,0}&\Phi_{0,1}&\cdots&\Phi_{0,\mathtt{k}}&\cdots\\ \Phi_{1,0}&\Phi_{1,1}&\cdots&\Phi_{1,\mathtt{k}}&\cdots\\ \vdots&\vdots&\vdots\vdots\vdots&\vdots&\vdots\vdots\vdots\\ \Phi_{\mathtt{r},0}&\Phi_{\mathtt{r},1}&\cdots&\Phi_{\mathtt{r},\mathtt{k}}&\cdots\\ \vdots&\vdots&\vdots\vdots\vdots&\vdots&\vdots\vdots\vdots\end{bmatrix}.$$

The matrix $\tilde{\Phi}$ is symmetric, and, while infinite, it has only a finite number of non-zero entries. Consider its number of positive and negative eigenvalues and its rank and, since they are uniquely determined by $\Phi$, denote these $\pi(\Phi)$, $\nu(\Phi)$, and $\mathrm{rank}(\Phi)=\pi(\Phi)+\nu(\Phi)$, respectively. $\tilde{\Phi}$ can

be factored as $\tilde{\Phi} = \tilde{F}_+^\top \tilde{F}_+ - \tilde{F}_-^\top \tilde{F}_-$, with $\tilde{F}_+$ and $\tilde{F}_-$ matrices with an infinite number of columns but a finite number of rows. In fact, the number of rows can be taken to be equal to $\pi(\Phi)$ and $\nu(\Phi)$, respectively. This is the case iff the rows of $\tilde{F} = \begin{bmatrix} \tilde{F}_+ \\ \tilde{F}_- \end{bmatrix}$ are linearly independent. Define $F_+(\xi) = \tilde{F}_+ \begin{bmatrix} I_{\mathtt{w}} & I_{\mathtt{w}}\xi & I_{\mathtt{w}}\xi^2 & \cdots \end{bmatrix}^\top$, $F_-(\xi) = \tilde{F}_- \begin{bmatrix} I_{\mathtt{w}} & I_{\mathtt{w}}\xi & I_{\mathtt{w}}\xi^2 & \cdots \end{bmatrix}^\top$. This yields the factorization $\Phi(\zeta,\eta) = F_+^\top(\zeta) F_+(\eta) - F_-^\top(\zeta) F_-(\eta)$, with $F_+ \in \mathbb{R}^{\bullet \times \mathtt{w}}[\xi], F_- \in \mathbb{R}^{\bullet \times \mathtt{w}}[\xi]$, yielding a decomposition of a QDF into a sum and difference of squares:

$$\mathsf{Q}_\Phi(w) = |F_+\left(\frac{d}{dt}\right) w|^2 - |F_-\left(\frac{d}{dt}\right) w|^2.$$

Note that the rows of $F = \begin{bmatrix} F_+ \\ F_- \end{bmatrix}$ are linearly independent over $\mathbb{R}$ iff we take $F_+ \in \mathbb{R}^{\pi(\Phi)\times \mathtt{w}}[\xi], F_- \in \mathbb{R}^{\nu(\Phi)\times \mathtt{w}}[\xi]$. The (controllable) linear time-invariant differential system with image representation

$$\begin{bmatrix} f_+ \\ f_- \end{bmatrix} = \begin{bmatrix} F_+\left(\frac{d}{dt}\right) \\ F_-\left(\frac{d}{dt}\right) \end{bmatrix} w$$

plays an important role in the sequel. The above also holds, mutatis mutandis, for non-symmetric $\Phi \in \mathbb{R}^{\mathtt{w}\times\mathtt{w}}[\zeta,\eta]$, by replacing $\Phi$ by its symmetric part $\frac{1}{2}(\Phi + \Phi^*)$. We will use the notation $\pi(\Phi) = \pi\left(\frac{1}{2}(\Phi+\Phi^*)\right)$, and $\nu(\Phi) = \nu\left(\frac{1}{2}(\Phi+\Phi^*)\right)$ also in the non-symmetric case.

In the LQ case, dissipativity involves a supply rate that is a QDF. Thus we consider the dynamical system with behavior $\mathscr{B}$ defined by a two-variable polynomial matrix $\Phi \in \mathbb{R}^{\mathtt{w}\times\mathtt{w}}[\zeta,\eta]$ as

$$\mathscr{B} = \left\{ s : \mathbb{R} \to \mathbb{R} \;\middle|\; \exists w \in \mathscr{C}^\infty(\mathbb{R}, \mathbb{R}^{\mathtt{w}}) \text{ such that } s = \mathsf{Q}_\Phi(w) \right\}.$$

Since this behavior is the image of the map $\mathsf{Q}_\Phi$, we denote it by $\mathrm{im}(\mathsf{Q}_\Phi)$. The system $\Sigma_\Phi := \left(\mathbb{R}, \mathbb{R}, \mathrm{im}(\mathsf{Q}_\Phi)\right)$ obtained this way is time-invariant but clearly nonlinear. We do not know of a more immediate way of defining a system whose behavior is generated by a QDF. We state this as an open problem.

**Open problem 2.** *Under what conditions on the behavior of the dynamical system $\Sigma = (\mathbb{R}, \mathbb{R}, \mathscr{B})$ does there exists a polynomial matrix $\Phi \in \mathbb{R}^{\mathtt{w}\times\mathtt{w}}[\zeta,\eta]$ such that $\mathscr{B} = \mathrm{im}(\mathsf{Q}_\Phi)$?*

The question which we now deal with is to give conditions on the polynomial matrix $\Phi$ such that $\Sigma_\Phi = \left(\mathbb{R}, \mathbb{R}, \mathrm{im}(\mathsf{Q}_\Phi)\right)$ is dissipative. The paper [20] deals extensively with aspects of this dissipativity question. Our results follow very much the tradition of the work of Yakubovich [21, 22], Popov [8], and Kalman [4]. We first establish the following necessary condition for dissipativity.

**Proposition 5.**

$$\begin{aligned} [\![ \Sigma_\Phi = \left(\mathbb{R}, \mathbb{R}, \mathrm{im}(\mathsf{Q}_\Phi)\right) \textit{ dissipative} ]\!] \quad &\Rightarrow \quad [\![ \Phi(\lambda, \bar{\lambda}) + \Phi^\top(\bar{\lambda}, \lambda) \geq 0 \quad \forall\, \lambda \in \mathbb{C}, \mathrm{Re}(\lambda) \geq 0 ]\!] \\ &\Rightarrow \quad [\![ \Phi(i\omega, -i\omega) + \Phi^\top(-i\omega, i\omega) \geq 0 \quad \forall\, \omega \in \mathbb{R} ]\!]. \end{aligned}$$

**Proof.** In the proof, we assume that $\Phi = \Phi^\star$. Denote by $^*$ complex conjugate transpose. Consider the complexification of $\mathsf{Q}_\Phi$,

$$\mathsf{Q}_\Phi^{\mathbb{C}} : \mathscr{C}^\infty(\mathbb{R}, \mathbb{C}^{\mathtt{w}}) \to \mathscr{C}^\infty(\mathbb{R}, \mathbb{R}), \quad w \mapsto \Sigma_{\mathtt{r},\mathtt{k}} \left(\frac{d^{\mathtt{r}}}{dt^{\mathtt{r}}} w\right)^* \Phi_{\mathtt{r},\mathtt{k}} \left(\frac{d^{\mathtt{k}}}{dt^{\mathtt{k}}} w\right).$$

Note that for $w_1, w_2 \in \mathscr{C}^\infty(\mathbb{R}, \mathbb{R}^{\mathtt{w}})$, $\mathsf{Q}_\Phi^{\mathbb{C}}(w_1 + iw_2) = \mathsf{Q}_\Phi(w_1) + \mathsf{Q}_\Phi(w_2)$. Hence $\left(\mathbb{R}, \mathbb{R}, \mathrm{im}(\mathsf{Q}_\Phi)\right)$ is dissipative iff $\left(\mathbb{R}, \mathbb{R}, \mathrm{im}\left(\mathsf{Q}_\Phi^{\mathbb{C}}\right)\right)$ is. So, we may as well consider complex-valued $w$'s in order to prove the proposition.

Led $a \in \mathbb{C}^{\mathtt{w}} \lambda_0 \in \mathbb{C}$, and $w_0 : t \in \mathbb{R} \mapsto e^{\lambda_0 t} a \in \mathbb{C}^{\mathtt{w}}$. Then $\mathtt{Q}_\Phi^{\mathbb{C}}(w_0)(t) = a^* \Phi\left(\bar{\lambda_0}, \lambda_0\right) a e^{\left(\lambda_0 + \bar{\lambda}_0\right) t} \in \mathbb{R}$, an exponential. If $\Sigma_\Phi = \left(\mathbb{R}, \mathbb{R}, \mathrm{im}\left(\mathtt{Q}_\Phi\right)\right)$ is dissipative, then $\lambda_0 + \bar{\lambda}_0 \geq 0$ must imply $a^* \Phi\left(\bar{\lambda}_0, \lambda_0\right) a \geq 0$. This proves the proposition. ∎

We have seen that every QDF can be factored as a sum and difference of squares:

$$\mathtt{Q}_\Phi(w) = \left| F_+\left(\frac{d}{dt}\right) w \right|^2 - \left| F_-\left(\frac{d}{dt}\right) w \right|^2.$$

Define $F = \begin{bmatrix} F_+ \\ F_- \end{bmatrix}$. It is easy to see that for $\Sigma_\Phi = \left(\mathbb{R}, \mathbb{R}, \mathrm{im}\left(\mathtt{Q}_\Phi\right)\right)$ with $\Phi \in \mathbb{R}^{\mathtt{w} \times \mathtt{w}}[\xi]$, we can always assume that $\mathrm{rank}(F) = \mathtt{w}$, in the sense that there exists $\Phi' \in \mathbb{R}^{\mathtt{w}' \times \mathtt{w}'}[\zeta, \eta]$ such that $\mathrm{im}\left(\mathtt{Q}_{\Phi'}\right) = \mathrm{im}\left(\mathtt{Q}_\Phi\right)$ and $\mathrm{rank}(F') = \mathtt{w}'$, with $F' = \begin{bmatrix} F'_+ \\ F'_- \end{bmatrix}$ corresponding to the factorization of $\mathtt{Q}_{\Phi'}(w') = \left| F'_+\left(\frac{d}{dt}\right) w' \right|^2 - \left| F'_-\left(\frac{d}{dt}\right) w' \right|^2$ into a sum and difference of squares. It can be shown, using proposition 5, that dissipativity implies that we can always assume that $\pi(\Phi) \geq \mathtt{w}$. Of special interest is the situation in which there is a minimum number of positive squares: $\pi(\Phi) = \mathtt{w}$. Then $F_+$ is square with $\det(F_+) \neq 0$. In this case, we can obtain a complete characterization of dissipativity of a QDF.

Recall the definition of the $\mathscr{L}_\infty$ and $\mathscr{H}_\infty$ norms of $G \in \mathbb{R}(\xi)^{\bullet \times \bullet}$:

$$\|G\|_{\mathscr{L}_\infty} := \sup\left\{ |G(i\omega)| \;\middle|\; \omega \in \mathbb{R} \right\}, \qquad \|G\|_{\mathscr{H}_\infty} := \sup\left\{ |G(s)| \;\middle|\; s \in \mathbb{C}, \mathrm{Re}(s) \geq 0 \right\},$$

where $|\cdot|$ denotes the matrix norm induced by the Euclidean norms. Note that $\|G\|_{\mathscr{L}_\infty} < \infty$ iff $G$ is proper and has no poles on the imaginary axis, and that $\|G\|_{\mathscr{H}_\infty} < \infty$ iff $G$ is proper and has no poles in the closed right half of the complex plane.

**Theorem 6.** *Consider $\Phi \in \mathbb{R}^{\mathtt{w} \times \mathtt{w}}[\zeta, \eta]$. Assume that $\frac{1}{2}(\Phi + \Phi^\star)$ is given in terms of $F_+, F_- \in \mathbb{R}^{\bullet \times \mathtt{w}}[\xi]$ by $F_+^\top(\zeta) F_+(\eta) - F_-^\top(\zeta) F_-(\eta)$, with $F_+ \in \mathbb{R}^{\mathtt{w} \times \mathtt{w}}[\xi], F_- \in \mathbb{R}^{\bullet \times \mathtt{w}}[\xi]$, and $\det(F_+) \neq 0$. Define $G \in \mathbb{R}(\xi)^{\bullet \times \mathtt{w}}$ by $G = F_- F_+^{-1}$. The following are equivalent:*

*(i)* $\Sigma_\Phi = \left(\mathbb{R}, \mathbb{R}, \mathrm{im}\left(\mathtt{Q}_\Phi\right)\right)$ *is dissipative,*

*(ii) there exists* $\Psi \in \mathbb{R}^{\mathtt{w} \times \mathtt{w}}[\zeta, \eta], \mathtt{Q}_\Psi \geq 0$, *such that* $\frac{d}{dt} \mathtt{Q}_\Psi(w) \leq \mathtt{Q}_\Phi(w) \quad \forall w \in \mathscr{C}^\infty(\mathbb{R}, \mathbb{R}^{\mathtt{w}})$,

*(iii)* $\int_{-\infty}^0 \mathtt{Q}_\Phi(w)\, dt \geq 0 \quad \forall w \in \mathscr{C}^\infty(\mathbb{R}, \mathbb{R}^{\mathtt{w}})$ *of compact support,*

*(iv)* $\Phi\left(\lambda, \bar{\lambda}\right) + \Phi^\top\left(\bar{\lambda}, \lambda\right) \geq 0 \quad \forall \lambda \in \mathbb{C}, \mathrm{Re}(\lambda) \geq 0,$

*(v)* $\|G\|_{\mathscr{H}_\infty} \leq 1.$

**Proof.** The equivalence of (ii), (iii), (iv), and (v) is proven in [20, theorem 6.4].
(ii) ⇒ (i): Consider the latent variable system $(\mathbb{R}, \mathbb{R}, \mathbb{R}, \mathscr{B}_{\mathrm{full}})$, with

$$\mathscr{B}_{\mathrm{full}} = \left\{ (s, V) : \mathbb{R} \to \mathbb{R} \times \mathbb{R} \;\middle|\; \exists w \in \mathscr{C}^\infty(\mathbb{R}, \mathbb{R}^{\mathtt{w}}) \text{ such that } (s, V) = \left(\mathtt{Q}_\Phi(w), \mathtt{Q}_\Psi(w)\right) \right\}.$$

This latent variable system has $\mathrm{im}\left(\mathtt{Q}_\Phi\right)$ as its manifest behavior. Moreover, (ii) implies that $V$ is a non-negative storage function. The implication (ii) ⇒ (i) is therefore an immediate consequence of proposition 2.
(i) ⇒ (v): For simplicity of notation, assume that $\Phi = \Phi^\star$. By proposition 5,

$$\Phi\left(\lambda, \bar{\lambda}\right) = F_+^\top(\lambda) F_+\left(\bar{\lambda}\right) - F_-^\top(\lambda) F_-\left(\bar{\lambda}\right) \geq 0, \quad \forall \lambda \in \mathbb{C}, \mathrm{Re}(\lambda) \geq 0.$$

Hence $G^\top(\lambda) G\left(\bar{\lambda}\right) \leq I, \quad \forall \lambda \in \mathbb{C}, \mathrm{Re}(\lambda) \geq 0$. Equivalently, $\|G\|_{\mathscr{H}_\infty} \leq 1$. ∎

Theorem 6 applies to all situations in which the positive signature of $\Phi$ is equal to its dimension. The following theorem deals with another such situation.

**Theorem 7.** *Assume that* $\Phi \in \mathbb{R}^{\mathbb{w}\times\mathbb{w}}[\zeta,\eta]$ *is given by* $\Phi(\zeta,\eta) = F_1^\top(\zeta) F_2(\eta)$*, with* $F_1, F_2 \in \mathbb{R}^{\mathbb{w}\times\mathbb{w}}[\xi]$*, and* $\det(F_1) \neq 0$*. Define* $G \in \mathbb{R}(\xi)^{\mathbb{w}\times\mathbb{w}}$ *by* $G = F_2 F_1^{-1}$*. The following are equivalent:*

*(i)* $\Sigma_\Phi = \big(\mathbb{R}, \mathbb{R}, \mathrm{im}\,(\mathsf{Q}_\Phi)\big)$ *is dissipative,*

*(ii) there exists* $\Psi \in \mathbb{R}^{\mathbb{w}\times\mathbb{w}}[\zeta,\eta], \mathsf{Q}_\Psi \geq 0$*, such that* $\frac{d}{dt}\mathsf{Q}_\Psi(w) \leq \mathsf{Q}_\Phi(w) \quad \forall w \in \mathscr{C}^\infty(\mathbb{R}, \mathbb{R}^{\mathbb{w}})$*,*

*(iii)* $\int_{-\infty}^{0} \mathsf{Q}_\Phi(w)\, dt \geq 0 \quad \forall w \in \mathscr{C}^\infty(\mathbb{R}, \mathbb{R}^{\mathbb{w}})$ *of compact support,*

*(iv) G is positive real, i.e.* $G(\lambda) + G^\top(\bar{\lambda}) \geq 0$ *for* $\mathrm{Re}\,(\lambda) > 0$*.*

This theorem can be proven along the lines of the proof of theorem 6. We omit the details. Of course, the situations of theorem 6 and 7 are very much related. This can be seen from the relation

$$\Big(F_1^\top(\zeta)F_2(\eta) + F_2^\top(\zeta)F_1(\eta)\Big) = \frac{1}{2}\left(F_1(\zeta)+F_2(\zeta)\right)^\top\left(F_1(\eta)+F_2(\eta)\right) - \left(F_1(\zeta)-F_2(\zeta)\right)^\top\left(F_1(\eta)-F_2(\eta)\right),$$

which shows that theorem 6 is the more general one.

# 4 The storage function as a state function

In order to relate this situation to the KYP-lemma, we mention a result that relates storage functions to state variables. Assume that a behavior $\mathscr{B} \in \mathscr{L}^{\mathbb{w}}$ is given in terms of the latent variables $x$ by

$$Bw + Ax + E\frac{d}{dt}x = 0,$$

with $A, B, E \in \mathbb{R}^{\bullet\times\bullet}$ constant matrices. The variables $x$ are called *state* variables. We usually do not *define* state representations this way, but it can be shown that the appropriate state definition [18] leads to a representation by means of a differential equation that is first order in $x$ and zero-th order in $w$.

The expansion of $\mathsf{Q}_\Phi$ as $\mathsf{Q}_\Phi(w) = |F_+(\frac{d}{dt})w|^2 - |F_-(\frac{d}{dt})w|^2$ leads to a state representation of a QDF, as follows. Let $Bf + Ax + E\frac{d}{dt}x = 0$ be a state representation of the system in image representation

$$\begin{bmatrix} f_+ \\ f_- \end{bmatrix} = \begin{bmatrix} F_+(\frac{d}{dt}) \\ F_-(\frac{d}{dt}) \end{bmatrix} w.$$

Then

$$B\begin{bmatrix} f_+ \\ f_- \end{bmatrix} + Ax + E\frac{d}{dt}x = 0, \quad s = |f_+|^2 - |f_-|^2$$

is a state representation of $\mathsf{Q}_\Phi$. In fact, by further partitioning the variables $f_+$ and $f_-$ componentwise in inputs and outputs, we arrive at the following input/state/output representation of a QDF:

$$\frac{d}{dt}x = Ax + B\begin{bmatrix} u_+ \\ u_- \end{bmatrix}, \quad \begin{bmatrix} y_+ \\ y_- \end{bmatrix} = Cx + D\begin{bmatrix} u_+ \\ u_- \end{bmatrix}, \quad s = |u_+|^2 + |y_+|^2 - |u_-|^2 - |y_-|^2.$$

In [13] the notion of state is brought to bear on storage functions. Assume that $\mathsf{Q}_\Psi$ satisfies the dissipation inequality

$$\frac{d}{dt}\mathsf{Q}_\Psi(w) \leq \mathsf{Q}_\Phi(w) \quad \forall w \in \mathscr{C}^\infty(\mathbb{R}, \mathbb{R}^{\mathbb{w}}).$$

Then it can be shown that $\mathsf{Q}_\Psi$ is actually a memoryless state function, i.e. there exists a matrix $K \in \mathbb{R}^{\bullet\times\bullet}$ such that

$$[\![ \left(\begin{bmatrix} f_+ \\ f_- \end{bmatrix}, x\right) \text{ satisfies } B\begin{bmatrix} f_+ \\ f_- \end{bmatrix} + Ax + E\frac{d}{dt}x = 0 \text{ and } \begin{bmatrix} f_+ \\ f_- \end{bmatrix} = \begin{bmatrix} F_+(\frac{d}{dt}) \\ F_-(\frac{d}{dt}) \end{bmatrix} w ]\!] \Rightarrow [\![ \mathsf{Q}_\Psi(w) = x^\top K x ]\!].$$

Moreover, if $\mathsf{Q}_\Psi \geq 0$, then $K$ can be taken to be symmetric and non-negative definite: $K = K^\top \geq 0$.

Summarizing, consider the following 7 statements concerning the system $\Sigma_\Phi = \big(\mathbb{R}, \mathbb{R}, \mathrm{im}\,(\mathsf{Q}_\Phi)\big)$ defined by a QDF.

(i) $\Sigma_\Phi$ is dissipative,

(ii) $\Sigma_\Phi$ admits a latent variable representation with a non-negative storage function,

(iii) $\Sigma_\Phi$ admits a latent variable representation with a non-negative QDF as storage function,

(iv) $\Sigma_\Phi$ admits a latent variable representation with a non-negative memoryless state function as storage function,

(v) $\Sigma_\Phi$ admits a latent variable representation with a non-negative memoryless quadratic state function as storage function,

(vi) $\int_{-\infty}^0 \mathsf{Q}_\Phi(w)\, dt \geq 0 \quad \forall w \in \mathscr{C}^\infty(\mathbb{R}, \mathbb{R}^{\mathtt{w}})$ of compact support,

(vii) The frequency domain and Pick matrix condition of [20, condition 3 of theorem 9.3] on $\Phi$.

The following implications have been shown, or are easily shown: (i) $\Leftrightarrow$ (ii) $\Leftarrow$ (iii) $\Leftrightarrow$ (iv) $\Leftrightarrow$ (v) $\Leftrightarrow$ (vi) '$\Leftrightarrow$' (vii) ('$\Leftrightarrow$') because there are additional assumptions in (vii)). This raises the question if (ii) $\Rightarrow$ (iii), i.e. if, assuming that the supply rate is a QDF, the existence of a non-negative storage function is equivalent to the existence of a non-negative storage function that is also a QDF. We conjecture that this is the case. Stated very precisely in terms of QDF's, this conjecture reads as follows.

**Conjecture.** *The following are equivalent for* $\Phi \in \mathbb{R}^{\mathtt{w}\times\mathtt{w}}[\zeta, \eta]$*:*

1. $\int_{-\infty}^0 \mathsf{Q}_\Phi(w)\, dt \geq 0 \quad \forall w \in \mathscr{C}^\infty(\mathbb{R}, \mathbb{R}^{\mathtt{w}})$ *of compact support,*

2. $\forall w \in \mathscr{C}^\infty(\mathbb{R}, \mathbb{R}^{\mathtt{w}})$, $\exists K \in \mathbb{R}$, *such that* $-\int_0^T \mathsf{Q}_\Phi(w)\, dt \leq K \quad \forall T \geq 0$.

The first statement implies the second. Indeed, let $w \in \mathscr{C}^\infty(\mathbb{R}, \mathbb{R}^{\mathtt{w}})$, and choose $v \in \mathscr{C}^\infty(\mathbb{R}, \mathbb{R}^{\mathtt{w}})$ of left compact support, such that $v(t) = w(t)$ for $t \geq 0$. If the first statement holds, then

$$\int_{-\infty}^T \mathsf{Q}_\Phi(v)\, dt \geq 0 \qquad \forall T \geq 0.$$

Hence, for $T \geq 0$,

$$-\int_0^T \mathsf{Q}_\Phi(w)\, dt \leq \int_{-\infty}^0 \mathsf{Q}_\Phi(v)\, dt.$$

This proves the second statement. The conjecture questions the validity of the converse. ∎

If the signature condition $\pi(\Phi) = \dim(\Phi)$ of theorem 6 holds, we have proven that all these conditions are equivalent, in fact, with the frequency domain condition (vii) made more precise as an $\mathscr{H}_\infty$-norm condition.

It is useful to contrast with the situation in which non-negativity of the storage function is not required. This is actually the situation considered by Yakubovich in [21]. Consider the following 6 statements concerning the system $\Sigma_\Phi = \big(\mathbb{R}, \mathbb{R}, \mathrm{im}\,(\mathsf{Q}_\Phi)\big)$ defined by a QDF.

(ii)' $\Sigma_\Phi$ admits a latent variable representation with a storage function,

(iii)' $\Sigma_\Phi$ admits a latent variable representation with a QDF as storage function,

(iv)' $\Sigma_\Phi$ admits a latent variable representation with a memoryless state function as storage function,

(v)' $\Sigma_\Phi$ admits a latent variable representation with a memoryless quadratic state function as storage function,

(vi)' $\int_{-\infty}^{+\infty} \mathsf{Q}_\Phi(w)\, dt \geq 0 \quad \forall w \in \mathscr{C}^\infty(\mathbb{R}, \mathbb{R}^{\mathtt{w}})$ of compact support,

(vii)' $\Phi(i\omega, -i\omega) + \Phi^\top(-i\omega, i\omega) \geq 0 \quad \forall\, \omega \in \mathbb{R}$.

The following implications have been shown, or are easily shown: (ii)' $\Leftarrow$ (iii)' $\Leftrightarrow$ (iv)' $\Leftrightarrow$ (v)' $\Leftrightarrow$ (vi)' $\Leftrightarrow$ (vii)'. This raises the question if (ii)' $\Rightarrow$ (iii)', i.e. if assuming that the supply rate is a QDF, the existence of a storage function is equivalent to the existence of a storage function that is a QDF. We conjecture that also this is the case, but it is unclear how to formulate this conjecture in a 'non-existential' way in terms of QDF's.

# 5 Linear systems and quadratic supply rates

The theory presented in the previous section is not only relevant for QDF's driven by a free signal $w \in \mathscr{C}^\infty(\mathbb{R}, \mathbb{R}^{\mathtt{w}})$, leading to the supply rate $s = \mathsf{Q}_\Phi(w)$. In fact, it is applicable whenever we have underlying variables that are constrained by controllable linear time-invariant differential systems, and supply rates acting on these variables through quadratic expressions involving polynomials or rational functions.

Let us clarify this a bit. Assume that we start with variables whose time behavior is constrained to belong to a linear system with behavior $\mathscr{B} \in \mathscr{L}^{\mathtt{w}}$. There are many models that are of this type. The immediate situation is the one in which the variables are described by linear constant coefficient differential equations: $R\left(\frac{d}{dt}\right) w = 0$, with $R \in \mathbb{R}^{\bullet \times \mathtt{w}}[\xi]$. Other situations that frequently occur can be reduced to this one. For example, when the model for $w$ involves auxiliary variables (as the state in the ubiquitous state space models): $R\left(\frac{d}{dt}\right) w = M\left(\frac{d}{dt}\right) \ell$ with $R, M \in \mathbb{R}^{\bullet \times \bullet}[\xi]$.

But, by appropriately interpreting the solution, we can also consider equations involving rational functions. Indeed, let $R \in \mathbb{R}(\xi)^{\bullet \times \mathtt{w}}$, and consider the 'differential equation' $R\left(\frac{d}{dt}\right) w = 0$. *What is meant by its behavior, i.e. by its set of solutions?* Since $R$ is a matrix of rational functions, it is not evident how to define solutions. This may be done in terms of co-prime factorizations, as follows. $R$ can be factored $R = P^{-1}Q$ with $P \in \mathbb{R}^{\bullet \times \bullet}[\xi]$ square, $\det(P) \neq 0$, $Q \in \mathbb{R}^{\bullet \times \mathtt{w}}[\xi]$, and $(P, Q)$ left co-prime. We *define* the behavior of $R\left(\frac{d}{dt}\right) w = 0$ as that of $Q\left(\frac{d}{dt}\right) w = 0$, i.e. as $\ker\left(Q\left(\frac{d}{dt}\right)\right)$. It is easy to see that this behavior is independent of which co-prime factorization is taken. Hence $R\left(\frac{d}{dt}\right) w = 0$, with $R \in \mathbb{R}(\xi)^{\bullet \times \mathtt{w}}$ a matrix of rational functions, defines a behavior in $\mathscr{L}^{\mathtt{w}}$. And, of course, once we have this, if follows from the elimination theorem that the manifest behavior of the system involving latent variables, $R\left(\frac{d}{dt}\right) w = M\left(\frac{d}{dt}\right) \ell$ with $R, M \in \mathbb{R}(\xi)^{\bullet \times \bullet}$, also belongs to $\mathscr{L}^{\mathtt{w}}$.

It follows from all this that the classical linear system models

$$\frac{d}{dt}x = Ax + Bu, y = Cx + Du, \quad w = \begin{bmatrix} u \\ y \end{bmatrix}$$

with $A, B, C, D$ matrices, and

$$y = Gu, \quad w = \begin{bmatrix} u \\ y \end{bmatrix}$$

with $G$ a transfer matrix of rational functions lead to a behavior $\in \mathscr{L}^{\mathtt{w}}$. These are both special cases of the more general model involving latent variables and rational functions

$$R\left(\frac{d}{dt}\right) w = M\left(\frac{d}{dt}\right) \ell$$

with $R, M \in \mathbb{R}(\xi)^{\bullet \times \bullet}$ matrices of rational functions (not necessarily proper). It should be noted that the system described by the transfer function $y = Gu$ is automatically controllable. Transfer functions are

inadequate to deal with systems that are not controllable. The main difference for $y = G(\frac{d}{dt})u$ between the case that $G$ is a polynomial matrix versus a matrix of rational functions, is that in the polynomial case there is *unique* $y$ corresponding to every $u \in \mathscr{C}^\infty(\mathbb{R}, \mathbb{R}^{\mathtt{m}})$, while in the rational functions there is no uniqueness (notwithstanding the numerous statements in the literature to the effect that a transfer function defines a map from inputs to outputs).

Further, suppose that we have a supply rate that is equal to a quadratic expression, like $s = |w_1|^2 - |w_2|^2$ or $s = w_1^\top w_2$, with $w_1$ and $w_2$ related to underlying system variables $w$ in such a way that joint behavior of $(w, w_1, w_2)$ is an element of $\mathscr{L}^\bullet$. The relation between these variables could therefore involve linear differential equations, rational transfer functions, auxiliary variables, etc. It comprises every QDF by defining $w_1$ and $w_2$ appropriately, say

$$\begin{aligned} w_1 &= \left(w, \frac{d}{dt}w, \frac{d^2}{dt^2}w, \dots\right) \\ w_2 &= \left(\Sigma_{\mathtt{k}}\, \Phi_{0,\mathtt{k}} \frac{d^{\mathtt{k}}}{dt^{\mathtt{k}}}w, \Sigma_{\mathtt{k}}\, \Phi_{1,\mathtt{k}} \frac{d^{\mathtt{k}}}{dt^{\mathtt{k}}}w, \Sigma_{\mathtt{k}}\, \Phi_{2,\mathtt{k}} \frac{d^{\mathtt{k}}}{dt^{\mathtt{k}}}w, \dots\right). \end{aligned}$$

and $s = w_1^\top w_2$. But $w_1$ and $w_2$ could also be defined by $w_1 = G_1(\frac{d}{dt})w, w_2 = G_2(\frac{d}{dt})w$ with $G_1, G_2 \in \mathbb{R}(\xi)^{\bullet \times \mathtt{w}}$, and $w \in \mathscr{B}$, $\mathscr{B} \in \mathscr{L}^{\mathtt{w}}$. Or by $F_1(\frac{d}{dt})w_1 = G_1(\frac{d}{dt})w, F_2(\frac{d}{dt})w_2 = G_2(\frac{d}{dt})w$, with $F_1, G_1, F_2, G_2 \in \mathbb{R}(\xi)^{\bullet \times \bullet}$ (not necessarily proper).

Now, assume that the resulting behavior of the variables $(w_1, w_2)$ (with all other variables eliminated) in $s = |w_1|^2 - |w_2|^2$ or $s = w_1^\top w_2$ is controllable. Then there exists an image representation

$$\begin{bmatrix} w_1 \\ w_2 \end{bmatrix} = \begin{bmatrix} M_1\left(\frac{d}{dt}\right) \\ M_2\left(\frac{d}{dt}\right) \end{bmatrix} w$$

leading to $s = |\left(M_1\left(\frac{d}{dt}\right)w\right)|^2 - |\left(M_2\left(\frac{d}{dt}\right)w\right)|^2$ or $s = \left(M_1\left(\frac{d}{dt}\right)w\right)^\top \left(M_2\left(\frac{d}{dt}\right)w\right), \quad w \in \mathscr{C}^\infty(\mathbb{R}, \mathbb{R}^{\mathtt{w}})$. These supply rates are hence also QDF's.

All this shows that the situation discussed in the previous section is very general indeed. It only requires: linear differential relations, quadratic supply rates, and a controllability assumption. Needless to add, however, that it may not be a simple matter to translate the conditions of, for example, theorems 6 and 7, to a representation in which the supply rate is not given directly as a 'pure' QDF.

In the literature the linear quadratic theory focusses on the state space representations like

$$\frac{d}{dt}x = Ax + Bu, \quad s = u^\top Ru + u^\top Lx + x^\top Qx.$$

However, one may as well deal with the resulting QDF's by simply studying (symmetric) 2-variable polynomial matrices $\Phi \in \mathbb{R}^{\mathtt{w} \times \mathtt{w}}[\zeta, \eta]$.

In closing this section, we mention two straightforward results involving a supply rates that is defined by rational transfer functions.

**Theorem 8.** *Consider the supply rate $s$ given by $s = |f_+|^2 - |f_-|^2$, with $f_+, f_-$ generated by the transfer functions $f_+ = F_+(\frac{d}{dt})w, f_- = F_-(\frac{d}{dt})w, w \in \mathscr{C}^\infty(\mathbb{R}, \mathbb{R}^{\mathtt{w}})$, with $F_+ \in \mathbb{R}(\xi)^{\mathtt{w} \times \mathtt{w}}, F_- \in \mathbb{R}(\xi)^{\bullet \times \mathtt{w}}$, and $\det(F_+) \neq 0$. Define $G \in \mathbb{R}(\xi)^{\bullet \times \mathtt{w}}$ by $G = F_- F_+^{-1}$. Then the resulting system is dissipative iff $\|G\|_{\mathscr{H}_\infty} \leq 1$.*

**Theorem 9.** *Consider the supply rate $s$ given by $s = f_1^\top f_2$, with $f_1, f_2$ generated by the transfer functions $f_1 = F_1(\frac{d}{dt})w, f_2 = F_2(\frac{d}{dt})w, w \in \mathscr{C}^\infty(\mathbb{R}, \mathbb{R}^{\mathtt{w}})$, with $F_1, F_2 \in \mathbb{R}(\xi)^{\mathtt{w} \times \mathtt{w}}$, and $\det(F_1) \neq 0$. Define $G \in \mathbb{R}(\xi)^{\mathtt{w} \times \mathtt{w}}$ by $G = F_2 F_1^{-1}$. Then the resulting system is dissipative iff $G$ is positive real.*

These theorems are an immediate consequences of theorem 6 and theorem 7.

In addition to QDF, there are other quadratic forms on $\mathscr{C}^\infty(\mathbb{R}, \mathbb{R}^{\mathtt{w}})$ and $\mathscr{D}(\mathbb{R}, \mathbb{R}^{\mathtt{w}})$ that are important in LQ theory. We mention here one for the sake of completeness.

**Definition 10.** *An* quadratic integral form (QIF) *is defined by a matrix of rational functions,* $\Pi \in \mathbb{R}(\xi)^{\mathtt{w}\times\mathtt{w}}$ *with no poles on the imaginary axis, as the map*

$$\mathscr{I}_\Pi : w \in \mathscr{D}(\mathbb{R},\mathbb{R}^{\mathtt{w}}) \mapsto \frac{1}{2\pi}\int_{-\infty}^{+\infty} \hat{w}(-i\omega)^\top \Pi(i\omega)\hat{w}(i\omega)\, d\omega \in \mathbb{R},$$

*where* $\hat{w}$ *denotes the Fourier transform of* $w$*.*

$\mathscr{I}_\Pi$ is merely a quadratic form on $\mathscr{D}(\mathbb{R},\mathbb{R}^{\mathtt{w}})$ QDF's and QIF's (and their half-line versions) are intimately related. This relation is one of the main themes in [20] for the case that $\Pi$ is purely polynomial. We do not pursue this relationship here.

# 6 Stability of Systems

Stability is one of the main issues in applied mathematics. It is of special importance in control, where one of the central problems is to design a regulated system that maintains stability under a set of perturbations. Robust stability is the problem discussed in the remainder of this paper.

As a mathematical question in control theory, the stability problem first emerged in the context of linear constant coefficient scalar differential equations, through the work of Maxwell [5]. A system described by $p\left(\frac{d}{dt}\right)w = 0$, with $p \in \mathbb{R}[\xi]$, is defined to be stable if all its solutions converge to 0 as $t \to \infty$. Maxwell related stability to negativity of the real part of the roots of the polynomial $p$. Later, Routh [9] and Hurwitz [3] obtained conditions that characterize negativity of these real parts by a finite set of algebraic inequalities involving the coefficients of the polynomial $p$. See [2, section 3.4] for a recent exposition.

Convergence, as $t \to \infty$, of the solution to 0 (or, more generally, to a nominal trajectory) is also the basic idea underlying *Lyapunov stability*. In Lyapunov stability, the focus is on systems described by the flow $\frac{d}{dt}x(t) = f(x(t),t)$ and the behavior of the state trajectories $x : \mathbb{R} \to \mathbb{X}$, with $\mathbb{X}$ the state space, the manifold on which the flow is defined. Once convergence of the state is proven, one readily obtains convergence of a reasonable function of the state as well.

A second angle from which to view the stability question, is by considering a system as an input/output map, and aiming at boundedness of this map. Consider, for example, in the linear time-invariant case, the convolution $y(t) = \int_{-\infty}^{t} H(t-t')\,u(t')\,dt'$ relating the input $u : \mathbb{R} \to \mathbb{R}^{\mathtt{m}}$ to the output $y : \mathbb{R} \to \mathbb{R}^{\mathtt{p}}$. If $H \in \mathscr{L}^{\mathrm{loc}}(\mathbb{R}_+,\mathbb{R}^{\mathtt{p}\times\mathtt{m}})$, this convolution is a well-defined map, taking inputs $u \in \mathscr{L}^{\mathrm{loc}}(\mathbb{R},\mathbb{R}^{\mathtt{m}})$ with compact support on the left to outputs $y \in \mathscr{L}^{\mathrm{loc}}(\mathbb{R},\mathbb{R}^{\mathtt{p}})$ (also with compact support on the left). We can now define *input/output stability* in terms of the boundedness of this map, say that $u \in \mathscr{L}_2(\mathbb{R},\mathbb{R}^{\mathtt{m}})$ should yield $y \in \mathscr{L}_2(\mathbb{R},\mathbb{R}^{\mathtt{p}})$. It is easily seen that this is the case if $H \in \mathscr{L}(\mathbb{R}_+,\mathbb{R}^{\mathtt{p}\times\mathtt{m}})$. This notion of input/output stability as boundedness of input/output maps is readily generalized to more general, nonlinear time-varying, systems. In this input/output setting, stability is basically equated with $\mathscr{L}_2$ into $\mathscr{L}_2$, or with *finite gain*.

An important aspect of stability studied in control theory is *robust stability*. This problem is usually approached by viewing the system as consisting of two interconnected parts: a nominal system (called the *plant*) interconnected with an *uncertain system*. The robust stability problem then requires to prove that the overall system remains stable for an appropriate family of uncertain perturbations. Robust stability articulates the essence of good regulation very well.

It is not evident, however, how to formulate robust stability mathematically. If we wish to deal with it from a Lyapunov point of view, we need to assume a state model, not only for the plant, but also for the uncertain perturbation. But it is obviously undesirable to assume a great deal of insight into the nature of an uncertain perturbation, and, in particular, knowledge of its state space may be unrealistic. This, it appears, is the main reason why some researchers strongly object to state space methods in robust stability analysis. A good theory of robust stability should view the uncertain perturbations as a *black box*, and require only very rough qualitative knowledge of the uncertain perturbations.

# 7 Input/output feedback stability

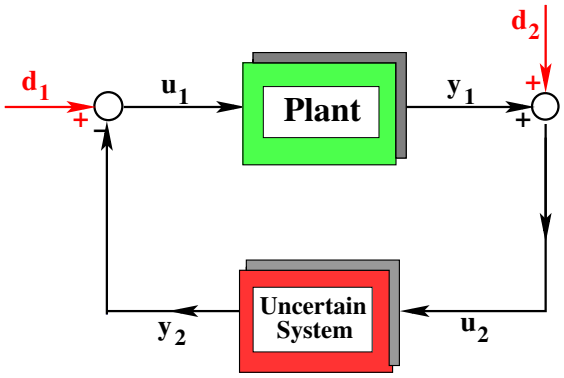


**Figure 2.** Feedback System

The most successful theory of robust stability considers the feedback system shown in figure 2. In this architecture, the plant is in the forward loop and the uncertain perturbation in the return loop. The problem is to prove conditions under which the closed loop system remains stable for a class of uncertain systems in the feedback loop. Stability is defined as input/output stability, with the additive 'noise' signals $d_1, d_2$ viewed as inputs, and the internal loop signals $u_1, y_1, u_2, y_2$ viewed as outputs.

It has proven not to be a sinecure to come up with a satisfactory input/output stability formulation for this feedback system. Crucial in this development has been the introduction of *extended spaces* by Sandberg [11, 12] and Zames [23]. Define, for example,

$$\mathscr{L}_{2,\mathrm{e}}(\mathbb{R}, \mathbb{R}^{\mathtt{n}}) := \{ f : \mathbb{R} \to \mathbb{R}^{\mathtt{n}} \mid \int_{-\infty}^{t} |f(t')|^2 dt' < \infty \quad \forall\, t \in \mathbb{R} \}.$$

Assume that the signals $d_1, u_1, y_2$ take values in $\mathbb{R}^{\mathtt{m}}$ and $d_2, u_2, y_1$ in $\mathbb{R}^{\mathtt{p}}$. *$\mathscr{L}_2$-input/output stability* of the feedback system shown in figure 2 is defined by the requirement that for any $d_1 \in \mathscr{L}_2(\mathbb{R}, \mathbb{R}^{\mathtt{m}})$, $d_2 \in \mathscr{L}_2(\mathbb{R}, \mathbb{R}^{\mathtt{p}})$, every corresponding solution to the feedback equations in the extended spaces, $u_1, y_1 \in \mathscr{L}_{2,\mathrm{e}}(\mathbb{R}, \mathbb{R}^{\mathtt{m}})$, $u_2, y_2 \in \mathscr{L}_{2,\mathrm{e}}(\mathbb{R}, \mathbb{R}^{\mathtt{p}})$, should actually belong to the non-extended $\mathscr{L}_2$-spaces themselves: there holds $u_1, y_1 \in \mathscr{L}_2(\mathbb{R}, \mathbb{R}^{\mathtt{m}})$, $u_2, y_2 \in \mathscr{L}_2(\mathbb{R}, \mathbb{R}^{\mathtt{p}})$. This formulation side-steps the existence (and uniqueness) question. Indeed, in general, it is not true that to every $d_1 \in \mathscr{L}_2(\mathbb{R}, \mathbb{R}^{\mathtt{m}}), d_2 \in \mathscr{L}_2(\mathbb{R}, \mathbb{R}^{\mathtt{p}})$, there exists a (unique) corresponding solution $u_1, y_1 \in \mathscr{L}_{2,\mathrm{e}}(\mathbb{R}, \mathbb{R}^{\mathtt{m}}), u_2, y_2 \in \mathscr{L}_{2,\mathrm{e}}(\mathbb{R}, \mathbb{R}^{\mathtt{p}})$. However, it can be shown that under reasonable conditions for every $d_1 \in \mathscr{L}_{2,\mathrm{e}}(\mathbb{R}, \mathbb{R}^{\mathtt{m}}), d_2 \in \mathscr{L}_{2,\mathrm{e}}(\mathbb{R}, \mathbb{R}^{\mathtt{p}})$ with compact support on the left, there exists a unique corresponding solution $u_1, y_1 \in \mathscr{L}_{2,\mathrm{e}}(\mathbb{R}, \mathbb{R}^{\mathtt{m}}), u_2, y_2 \in \mathscr{L}_{2,\mathrm{e}}(\mathbb{R}, \mathbb{R}^{\mathtt{p}})$ with also compact support on the left. This property, related to the notion of *well-posedness*, shows that under these conditions $\mathscr{L}_2$-input/output stability implies that there exists, for every $d_1 \in \mathscr{L}_2(\mathbb{R}, \mathbb{R}^{\mathtt{m}}), d_2 \in \mathscr{L}_2(\mathbb{R}, \mathbb{R}^{\mathtt{p}})$ with compact support on the left, a unique corresponding solution $u_1, y_1 \in \mathscr{L}_{2,\mathrm{e}}(\mathbb{R}, \mathbb{R}^{\mathtt{m}}), u_2, y_2 \in \mathscr{L}_{2,\mathrm{e}}(\mathbb{R}, \mathbb{R}^{\mathtt{p}})$ with also compact support on the left, and that this solution actually belongs to $\mathscr{L}_2$: $u_1, y_1 \in \mathscr{L}_2(\mathbb{R}, \mathbb{R}^{\mathtt{m}})$, $u_2, y_2 \in \mathscr{L}_2(\mathbb{R}, \mathbb{R}^{\mathtt{p}})$. One may wish to take this formulation with well-posedness and the restriction to left compact support inputs $d_1, d_2$, as part of the definition of $\mathscr{L}_2$-input/output stability.

This input/output approach to stability of feedback systems was developed in the 1960's and 1970's in the work of Zames [23], Sandberg [11, 12] (and his subsequent papers), and numerous others, e.g. [16], [10], [6]. Textbooks that deal with this theory are, for example, [1, 14]. In [15], this approach to robust stability has been demonstrated to be also very effective to deal with issues as the parametrization of all stabilizing controllers, simultaneous stabilization, etc.

Notwithstanding all its merits, the input/output stability theory just described suffers from number of drawbacks. We discuss the two main ones:

1. The input/output structure of the plant, the uncertain system, and the interconnection.
2. The additive inputs $d_1, d_2$ in terms of which stability is defined.

*Does this input/output structure and do these additive inputs describe realistic physical interconnections?*

The limitations of input/output thinking has been the main motivation for the development of the behavioral approach to system theory [18, 19, 7]. Physical systems are not signal processors. The interconnection of physical systems occurs through sharing variables, the common variables on the terminals that are interconnected. By interconnecting two terminals of two electrical circuits, we equate two voltages and equate two currents (or, depending on the positive directions chosen, we put the sum of two currents equal to zero). These two terminals henceforth share their voltage and current. It may be that we can consider one of the terminals as voltage driven, and the other as current driven. If this is the case, it is just a fortuitous accident, which allows viewing the interconnection as an input-to-output assignment. But there is reason whatsoever why this could be elevated to a general principle. By interconnecting two pins of two mechanical systems, we equate two forces and equate two positions (or two angles and two torques). The two pins henceforth share the same force and the same position. It may be that we can consider one of the pins as force driven, and the other as position driven. If this is the case, it is just a fortuitous accident, which allows viewing the interconnection as an input-to-output assignment. But there is reason whatsoever why this could be elevated to a general principle. By interconnecting two pipes of two fluidic systems, we equate two flows and two pressures. The two pipes henceforth share the same flow and the same pressure at the connection point. There is reason whatsoever why this could or should be viewed as an input-to-output assignment. This listing can go on and on, nor is it limited to physical systems.

A second, somewhat related, point is the presence of additive perturbations $d_1, d_2$ in the feedback loop of figure 2. These inputs serve a useful purpose for coming up with a workable definition of stability, but they cannot be justified from a physical point of view. Typically the uncertain part of a system involves model approximations. For example, the neglected dynamics of a wire in electrical circuits, the elasticity of a mechanical part that is modelled as rigid, changing system parameters due to ageing, saturation effects, etc. The assumption that these perturbations involve additive inputs (and therefore need an energy source) is usually not physical. The assumption of additive perturbations to capture model imperfections is pervasive in system theory, for example in system identification. It can be justified from a pragmatic point of view as a way of introducing uncertainty in the model, but it is seldom a good description of reality. These additive inputs seem to be inspired by the sensor and actuator noise sometimes encountered in sensor-to-actuator feedback control, but they do not fit well into a physical description of an uncertain interconnection.

In the remaining sections, we present a theory of robust stability that

- does not assume a state model of the uncertain system,
- does not assume additive inputs at the interconnection points, and
- avoids input/output representations.

We use the following 'Lyapunov like' concept of stability.

**Definition 11.** $\Sigma = (\mathbb{R}, \mathbb{W}, \mathscr{B})$ *is said to be* stable *if* $[\![w \in \mathscr{B}]\!] \Rightarrow [\![w(t) \to 0 \text{ as } t \to \infty]\!]$.

Whenever we deal with stability, we (implicitly) assume that $0 \in \mathbb{W} \subseteq \mathbb{V}$, with $\mathbb{V}$ a normed vector space (this is done for simplicity of exposition: it is straightforward to extend to more general situations).

# 8 Stability of uncertain interconnected systems

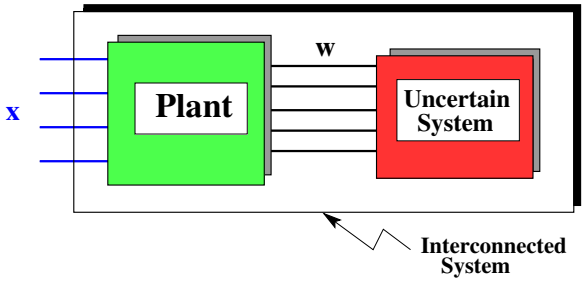


**Figure 3.** Interconnected System

We will study the stability of the interconnected system shown in figure 3. In this architecture, we assume that the plant and the uncertain system interact by sharing certain variables, denoted by $w$. Stability is defined in terms of convergence to 0 of the 'external' variables $x$. We now formalize this set-up in the behavioral language.

The plant is a dynamical system $\Sigma_{\text{plant}} = \big(\mathbb{R}, \mathbb{X} \times \mathbb{W}, \mathscr{B}_{\text{plant}}\big)$. Note that the plant involves two types of variables: those associated with $x$ (the notation $x$ suggests 'state', since later we will take them to be the state variables of the plant), and those associated with the interconnection variables $w$. We assume that $0 \in \mathbb{X}$ is (a subset of) a real vector space. Each trajectory in the plant behavior is a pair $(x,d) : \mathbb{R} \to \mathbb{X} \times \mathbb{W}$. The variables $x$ are those which we aim to prove stability for. The variables $w$ are the shared variables on the interconnection terminals. The uncertain system is a dynamical system $\Sigma_{\text{uncertain}} = (\mathbb{R}, \mathbb{W}, , \mathscr{B}_{\text{uncertain}})$. The interconnected system is obtained by letting the plant and the uncertain system share the variables $w$:

$$\Sigma_{\text{interconnected}} = \Sigma_{\text{plant}} \wedge \Sigma_{\text{uncertain}} = (\mathbb{R}, \mathbb{X}, \mathscr{B})$$

with

$$\mathscr{B} = \big\{ x : \mathbb{R} \to \mathbb{X} \;\big|\; \exists\, w : \mathbb{R} \to \mathbb{W} \text{ such that } (x,w) \in \mathscr{B}_{\text{plant}} \text{ and } w \in \mathscr{B}_{\text{uncertain}} \big\}.$$

In a typical application, $\Sigma_{\text{plant}}$ and $\Sigma_{\text{uncertain}}$ are interconnected through some terminals, as shown in figure 3. Each of these terminals carries some variables. By interconnecting, we impose equality of the variables that live on the terminals viewed as belonging to the plant or to the uncertain system. Examples are electrical interconnections, leading to equality of voltage and current, mechanical interconnections, leading to equality of positions and forces or torques and angles, thermal interconnections, leading to equality of temperatures and heat flows, etc.

The question addressed now is:

*Find conditions on* $\Sigma_{\text{plant}}$ *and* $\Sigma_{\text{uncertain}}$ *such that* $\Sigma_{\text{plant}} \wedge \Sigma_{\text{uncertain}}$ *is stable.*

# 9 Stability of dissipative interconnections

The principle that underlies the stability results that have emerged from the feedback stability literature is the observation that the interconnection of dissipative systems is stable. This is the basis of the small gain theorem, the positive operator theorem, the conic operator theorem (see the references given above), and the IQC-based results.

In figure 3, the plant and the uncertain system are not defined with associated supply rates. In fact, *choosing* appropriate supply rates is the key to the stability results. Usually, the supply rate is assumed to be a memoryless function of the system variables or a QDF in the system variables. This is also

the situation found in physical systems. In electrical circuits, the external variables are voltages and currents, and the supply rate (of energy, i.e. the power) is the sum of the product of the terminal currents and voltages. In mechanical systems, the external variables are forces and positions, the supply rate (of energy, i.e. the power) is the sum of the product of the terminal forces and velocities, i.e. the derivative of the positions. However, for stability considerations, we also need to allow situations where the supply rate is not a function of the system variables, but is related to the system variables through a behavior are important. This is the case, for example, when the supply rate involves a transfer function. In order to formalize all this, we need some more notation.

Let $\Sigma = (\mathbb{R}, \mathbb{W}_1 \times \mathbb{W}_2, \mathscr{B})$ be a dynamical system involving the variables $w_1$ and $w_2$. Define the *projections* $\pi_{\mathbb{W}_1}\Sigma$ and $\pi_{\mathbb{W}_2}\Sigma$ as $\pi_{\mathbb{W}_1}\Sigma := (\mathbb{R}, \mathbb{W}_1, \pi_{\mathbb{W}_1}\mathscr{B})$ with

$$\pi_{\mathbb{W}_1}\mathscr{B} := \left\{ w_1 : \mathbb{R} \to \mathbb{W}_1 \;\middle|\; \exists\, w_2 : \mathbb{R} \to \mathbb{W}_2 \text{ such that } (w_1, w_2) \in \mathscr{B} \right\}.$$

$\pi_{\mathbb{W}_2}\Sigma$ is analogously defined. This notation is readily generalized to the situation when there are more that two components in the signal space. We now introduce supply rates for the plant and the uncertain system, in the spirit of what is shown in figure 4.

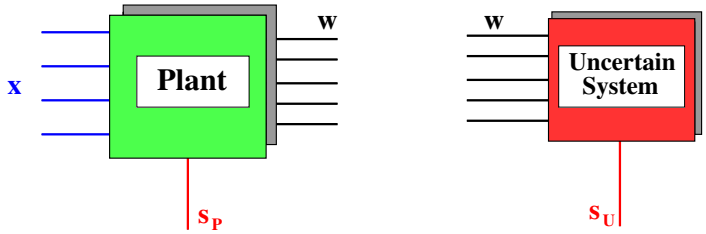


**Figure 4.** Dissipative plant and uncertain system

Consider a system $\Sigma'_{\text{plant}} = (\mathbb{R}, \mathbb{X} \times \mathbb{W} \times \mathbb{R}, \mathscr{B}'_{\text{plant}})$ such that the projection on the $\mathbb{X} \times \mathbb{W}$ component is the plant: $\pi_{\mathbb{X}\times\mathbb{W}}\Sigma'_{\text{plant}} = \Sigma_{\text{plant}}$. Denote the projection onto the third component, the supply rate, $s_P$, by $\pi_{s_P}\Sigma'_{\text{plant}}$. Similarly, consider a system $\Sigma'_{\text{uncertain}} = (\mathbb{R}, \mathbb{W} \times \mathbb{R}, \mathscr{B}'_{\text{uncertain}})$ such that the projection on the $\mathbb{W}$ component is the uncertain system: $\pi_{\mathbb{W}}\Sigma'_{\text{uncertain}} = \Sigma_{\text{uncertain}}$. Denote the projection onto the second component, the supply rate, $s_U$, by $\pi_{s_U}\Sigma'_{\text{uncertain}}$.

The proposition which follows states that if both $\pi_{s_P}\Sigma'_{\text{plant}}$ and $\pi_{s_U}\Sigma'_{\text{uncertain}}$ are dissipative, and if, roughly speaking, $s_P + s_U$ is (strictly) non-negative along trajectories of the interconnected system, then in the interconnected system, trajectory $w$ is square integrable. However, the trajectories $s_P$ and $s_U$ need not be a function of the trajectory $w$. They are, if, for example, these supply rates are memoryless functions or QDF's in the $w$ variables. On the other hand, they are not in the (common) case that the definitions of $s_P$ and $s_U$ involve, for example, transfer functions. Keeping this and figure 5 in mind, we obtain the following proposition which is the key to stability by dissipative interconnections. We assume that $0 \in \mathbb{W}$ is (a subset of) a real vector space.

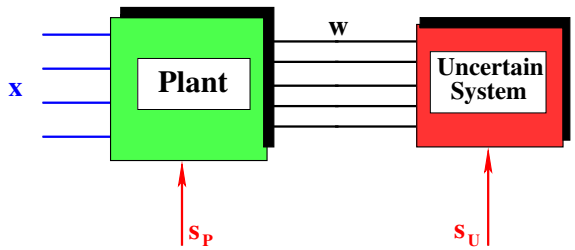


**Figure 5.** Dissipation in the interconnected system

**Proposition 12.** *We use the notation introduced in the pre-amble. Assume that*

*(i)* $\pi_{s_P}\Sigma'_{\text{plant}}$ *is dissipative,*

*(ii)* $\pi_{s_U}\Sigma'_{\text{uncertain}}$ *is dissipative,*

*(iii)* $\exists\,\varepsilon > 0$ *such that* $\forall w \in \pi_{\mathbb{W}}\mathscr{B}_{\text{plant}} \cap \mathscr{B}_{\text{uncertain}}$, $\exists s_P, s_U : \mathbb{R} \to \mathbb{R}$ *such that:*

*(a)* $(w, s_P)$ *belongs to the behavior of* $\pi_{\mathbb{W}\times\mathbb{R}}\Sigma'_{\text{plant}}$,

*(b)* $(w, s_U)$ *belongs to the behavior of* $\Sigma'_{\text{uncertain}}$,

*(c)* $s_P(t) + s_U(t) + \varepsilon|w(t)|^2 \leq 0 \;\; \forall t \in \mathbb{R}$.

*Then* $\forall w \in \pi_{\mathbb{W}}\mathscr{B}_{\text{plant}} \cap \mathscr{B}_{\text{uncertain}}$, *there holds* $\int_0^\infty |w(t)|^2\,dt < \infty$.

**Proof.** Dissipativeness implies that for any $s_P$ in the behavior of $\pi_{s_P}\Sigma'_{\text{plant}}$, and for any $s_U$ in the behavior of $\pi_{s_P}\Sigma'_{\text{uncertain}}$, there holds

$$\exists K_P \in \mathbb{R} \;\text{ such that }\; -\int_0^T s_P(t)\,dt \leq K_P \;\text{ for } T \geq 0.$$

$$\exists K_U \in \mathbb{R} \;\text{ such that }\; -\int_0^T s_U(t)\,dt \leq K_U \;\text{ for } T \geq 0.$$

This implies that

$$-\int_0^T (s_P(t) + s_U(t))\,dt \leq K_P + K_U \;\text{ for } T \geq 0.$$

Let $w \in \pi_{\mathbb{W}}\mathscr{B}_{\text{plant}} \cap \mathscr{B}_{\text{uncertain}}$. Then, with $s_P, s_U$ as in the statement of the proposition, we obtain

$$\int_0^T |w(t)|^2\,dt \leq \frac{K_P + K_U}{\varepsilon} \;\text{ for } T \geq 0.$$

The conclusion $\int_0^\infty |w(t)|^2\,dt < \infty$ follows. ∎

Once we have established that $\int_0^\infty |w(t)|^2\,dt < \infty$, we have to look at the structure of the plant behavior in order to conclude that $x(t) \to 0$ as $t \to \infty$. It is a common situation that square integrability of the external system variables implies convergence to zero of internal state-like system variables. We will deal with this in the next section when the plant is assumed to be a linear time-invariant differential system.

In many applications of proposition 12, the supply rates are defined by maps from $w$ to $s_P$ and $s_U$. In this case statement (iii) of the proposition can be simplified to read: $\exists\,\varepsilon > 0$ such that $\forall w \in \pi_{\mathbb{W}}\mathscr{B}_{\text{plant}} \cap \mathscr{B}_{\text{uncertain}}$, the corresponding $s_P, s_U$ satisfy condition (c). Also, whenever, for example, these maps are memoryless, say, $\mathrm{w} \mapsto (\mathrm{s_P(w)}, \mathrm{s_U(w)})$ condition (c) will be satisfied if $\exists\,\varepsilon > 0$ such that (c)': $\mathrm{s_P(w)} + \mathrm{s_U(w)} + \varepsilon|\mathrm{w}|^2 \leq 0 \;\; \forall \mathrm{w} \in \mathbb{W}$. The conditions of proposition 12 then reduce to (i) dissipativity of $\pi_{s_P}\Sigma'_{\text{plant}}$, (ii) dissipativity of $\pi_{s_U}\Sigma'_{\text{uncertain}}$, and (c)'.

We illustrate how the proposition 12 leads to the small gain theorem and the positive operator theorem. The plant $\Sigma_{\text{plant}} = \left(\mathbb{R}, \mathbb{X}\times\mathbb{U}\times\mathbb{Y}, \mathscr{B}_{\text{plant}}\right)$, the uncertain system $\Sigma_{\text{uncertain}} = \left(\mathbb{R}, \mathbb{U}\times\mathbb{Y}, \mathscr{B}_{\text{uncertain}}\right)$. For the small gain theorem, introduce the supply rates $s_P(t) = |u(t)|^2 - |y(t)|^2 + \varepsilon\left(|u(t)|^2 + |y(t)|^2\right)$ and $s_U(t) = |y(t)|^2 - |u(t)|^2$. The conditions of proposition 12 are then (i) dissipativity of the plant w.r.t. the supply rate $|u(t)|^2 - |y(t)|^2 + \varepsilon\left(|u(t)|^2 + |y(t)|^2\right)$, i.e. ( a form of) strict contractivity of the plant, and (ii) dissipativity of the uncertain system w.r.t. the supply rate $-|u(t)|^2 + |y(t)|^2$, i.e. contractivity of the uncertain system. For the positive operator theorem, introduce the supply rates $s_P(t) = u(t)^\top y(t) + \varepsilon\left(|u(t)|^2 + |y(t)|^2\right)$ and $s_U(t) = -u(t)^\top y(t)$. Stability then requires (a form of) strict passivity of the plant and passivity of the uncertain system.

# 10 Stability with a linear time-invariant plant

In this section, we assume that the plant is a linear time-invariant differential system with variables $w$, and with $x$ the state of the $w$-behavior. With slight abuse of notation, we denote this plant as $\Sigma_{\text{plant}} = (\mathbb{R}, \mathbb{R}^{\mathbb{w}}, \mathscr{B}_{\text{plant}}) \in \mathscr{L}^{\mathbb{w}}$, with $x$ the minimal state associated with $\mathscr{B}$. In this case, it is easy to prove that $w \in \mathscr{B}$ and $\int_0^\infty |w(t)|^2 dt < \infty$ imply $x(t) \to \infty$ as $t \to \infty$. In a suitable input/output partition, the plant variables $(w,x)$ are described by

$$\frac{d}{dt}x = Ax + Bu, \quad y = Cx + Du, \quad w = \begin{bmatrix} u \\ y \end{bmatrix},$$

with $(A,C)$ observable (because of minimality). Then $\int_0^\infty |w(t)|^2 dt < \infty$ and $Cx = y - Du$ imply $\int_0^\infty |Cx(t)|^2 dt < \infty$. Take $L \in \mathbb{R}^{\bullet \times \bullet}$ such that $A - LC$ is Hurwitz. Then $\frac{d}{dt}x = (A - LC)x + LCx + Bu$ implies $\int_0^\infty |x(t)|^2 dt < \infty$. Combined with $\frac{d}{dt}x = Ax + Bu$, we obtain $\int_0^\infty |x(t)|^2 dt < \infty$, $\int_0^\infty |\frac{d}{dt}x(t)|^2 dt < \infty$. This yields $x(t) \to 0$ as $t \to \infty$.

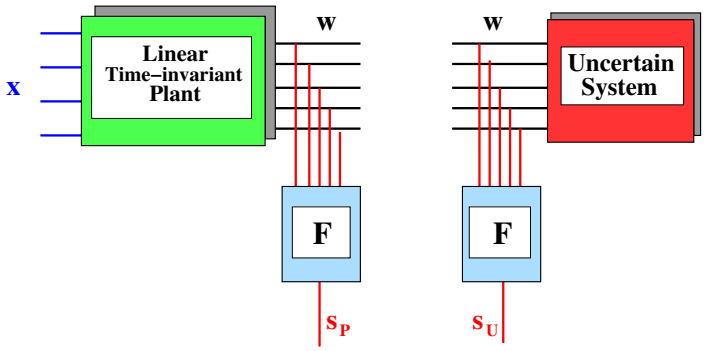


**Figure 6.** Linear plant and quadratic supply rate

The purpose of this section is to prove stability results based on supply rates generated by transfer functions that act on the variables $w$ (see figure 6).

**Proposition 13.** *Let $F \in \mathbb{R}(\xi)^{\bullet \times \mathbb{w}}$ and $S = S^\top \in \mathbb{R}^{\bullet \times \bullet}$ be such that for some $\varepsilon > 0$*

$$s_P = v_P^\top S v_P - \varepsilon |w_P|^2, \quad v_P = F(\frac{d}{dt})w_P, \quad w_P \in \mathscr{B}_{\text{plant}}$$

*and*

$$s_U = -v_U^\top S v_U, \quad v_U = F(\frac{d}{dt})w_U, \quad w_U \in \mathscr{B}_{\text{uncertain}}$$

*are both dissipative. Then $\Sigma_{\text{plant}} \wedge \Sigma_{\text{uncertain}}$ is stable.*

This proposition is an immediate consequence of proposition 12. Indeed, for $w \in \mathscr{B}_{\text{plant}} \cap \mathscr{B}_{\text{uncertain}}$, there exist corresponding responses $v_P = v_U$, leading to $s_P + s_U + \varepsilon |w|^2 = 0$.

The question now is how to make these conditions more concrete, for example by reducing the dissipativity of the first system to conditions on the transfer function of the plant, and dissipativity to an IQC on the uncertain system. Define the *dual* of $F \in \mathbb{R}(\xi)^{\bullet \times \bullet}$, denoted as $F^*$, by $F^*(\xi) := F^\top(-\xi)$. This dual is sometimes called the *para-hermitian conjugate*.

**Definition 14.** $\Pi = \Pi^* \in \mathbb{R}(\xi)^{\mathbb{w} \times \mathbb{w}}$ *defines an* integral quadratic constraint (IQC) *for the system* $\Sigma = (\mathbb{R}, \mathbb{R}^{\mathbb{w}}, \mathscr{B})$ *if*

$$\int_{-\infty}^{+\infty} \hat{w}(-i\omega)^\top \Pi(i\omega) \hat{w}(i\omega)\, d\omega \geq 0$$

*for all $w \in \mathscr{B} \cap \mathscr{L}_2(\mathbb{R}, \mathbb{R}^{\mathbb{w}})$ such that the integral exists. $\hat{w}$ denotes the Fourier transform of $w$.*

Note that, in terms of definition 10, an IQC basically requires that $\mathscr{I}_\Pi(w) \geq 0$ for $w \in \mathscr{B}$. IQC's are used in [6, theorem 1] to obtain very general and sharp stability results. We now use proposition 13 to obtain a special case, a stability result in an input/output setting based on a weighted loop gain condition and IQC's. The full generalization of [6, theorem 1] within the context of proposition 13 and without assuming input/output structure is left as future work.

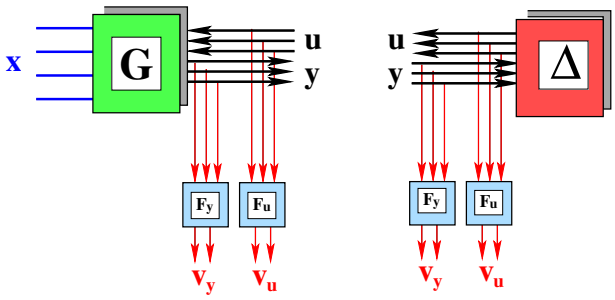


**Figure 7.** Linear plant with input and output supply rates

We consider the situation shown in figure 7. $\mathscr{B}_{\text{plant}}$ is described by the input/state/output representation

$$\frac{d}{dt}x = Ax + Bu, \quad y = Cx + Du,$$

with $A$ Hurwitz. Assume $\mathrm{u} \in \mathbb{R}^{\mathtt{m}}, \mathrm{y} \in \mathbb{R}^{\mathtt{p}}$. Denote the transfer function by $G$, $G(s) = C(Is - A)^{-1}B + D$. Assume that $\mathscr{B}_{\text{uncertain}}$ is the graph of a non-anticipating map $\Delta$ that maps $y : \mathbb{R} \to \mathbb{R}^{\mathtt{p}}$ with $\int_{-\infty}^{t} |y(t')|^2 dt'$ for all $t \in \mathbb{R}$ into $u = \Delta(y) : \mathbb{R} \to \mathbb{R}^{\mathtt{m}}$, with $\int_{-\infty}^{t} |u(t')|^2 dt'$ for all $t \in \mathbb{R}$. Assume moreover that $\Delta$ maps $\mathscr{L}_2(\mathbb{R}, \mathbb{R}^{\mathtt{p}})$ into $\mathscr{L}_2(\mathbb{R}, \mathbb{R}^{\mathtt{m}})$: $[\![ y \in \mathscr{L}_2(\mathbb{R}, \mathbb{R}^{\mathtt{p}}) ]\!] \Rightarrow [\![ u = \Delta(y) \in \mathscr{L}_2(\mathbb{R}, \mathbb{R}^{\mathtt{m}}) ]\!]$.

We have the following stability result. No attempt has been made to make the conditions as tight as possible in the sense of strict inequalities, or boundedness assumptions.

Assume that there exist $\Pi_u = \Pi_u^* \in \mathbb{R}(\xi)^{\mathtt{m}\times\mathtt{m}}$ and $\Pi_y = \Pi_y^* \in \mathbb{R}(\xi)^{\mathtt{p}\times\mathtt{p}}$, for which $\exists k, K \in \mathbb{R}, k > 0$, with $kI \leq \Pi_u(i\omega), \Pi_y(i\omega) \leq KI \quad \forall \omega \in \mathbb{R}$, such that

(i) $\Sigma_{\text{uncertain}}$ satisfies the IQC defined by $\Pi = \begin{bmatrix} -\Pi_u & 0 \\ 0 & \Pi_y \end{bmatrix}$,

(ii) $\exists \varepsilon > 0$ such that $G^\top(-i\omega)\Pi_y(i\omega)G(i\omega) \leq (1-\varepsilon)\Pi_u(i\omega) \quad \forall \omega \in \mathbb{R}$.

Then the interconnected system is stable.

The proof goes as follows. Factor $\Pi_u = F_u^* F_u$ and $\Pi_y = F_y^* F_y$, such that $F_u, F_y, F_u^{-1}, F_y^{-1}$ are proper and have no poles in the closed right half of the complex plane. It is well-known that (as a consequence of boundedness and strict positivity) such a spectral factorization exists. Consider $v_u = F_u(\frac{d}{dt})u, v_y = F_y(\frac{d}{dt})y$. We now prove that there exists $\varepsilon > 0$ such that the systems defined by respectively

$$s_P = |v_{u,P}|^2 - |v_{y,P}|^2 - \varepsilon\left(|u_P|^2 + |y_P|^2\right), \quad v_{u,P} = F_u(\frac{d}{dt})u_P, v_y = F_y(\frac{d}{dt})y_P, \quad \begin{bmatrix} u_P \\ y_P \end{bmatrix} \in \mathscr{B}_{\text{plant}}$$

and

$$s_U = -|v_{u,U}|^2 + |v_{y,U}|^2, \quad v_{u,U} = F_u(\frac{d}{dt})u_U, v_{y,U} = F_y(\frac{d}{dt})y_U, \quad \begin{bmatrix} u_U \\ y_U \end{bmatrix} \in \mathscr{B}_{\text{uncertain}}$$

are both dissipative. The result then follows from proposition 13. We only prove the second dissipativity condition (the first one is proven analogously). Observe that the IQC implies that for $y_U \in \mathscr{L}_2(\mathbb{R}, \mathbb{R}^{\mathtt{p}})$, there holds $\|F_u(\frac{d}{dt})\Delta(y_U)\|_{\mathscr{L}_2(\mathbb{R},\mathbb{R}^{\mathtt{m}})} \leq \|F_y(\frac{d}{dt})y_U\|_{\mathscr{L}_2(\mathbb{R},\mathbb{R}^{\mathtt{p}})}$. Now use the fact that $\mathscr{F}_u, \Delta$, and $F_y^{-1}$ are non-anticipating to conclude that $\int_{-\infty}^{t}\left(|F_y(\frac{d}{dt})y_U|^2 - |F_u(\frac{d}{dt})\Delta(y_U)|^2\right) dt \geq 0 \; \forall t \in \mathbb{R}$. This implies the second dissipativity claim.

# 11 Conclusions

In this paper we have proposed a new definition of dissipativity directly based on the behavior of the rate of supply absorbed by a system. We showed that this definition is equivalent to the existence of a non-negative storage function.

Quadratic differential forms are a concrete class of supply rates for which dissipativity can be investigated. We obtained frequency domain conditions for dissipativity of $\Sigma_\Phi = \left(\mathbb{R}, \mathbb{R}, \mathrm{im}\left(\mathsf{Q}_\Phi\right)\right)$. In particular, we showed that $\Phi\left(\lambda, \bar{\lambda}\right) + \Phi^\top\left(\bar{\lambda}, \lambda\right) \geq 0$ for $\lambda \in \mathbb{C}, \mathrm{Re}\left(\lambda\right) \geq 0$ is a necessary condition. We also formulated a clear conjecture for a necessary and sufficient condition. In the case that the dimension of $\Phi$ is equal to its positive signature, we obtained several equivalent necessary and sufficient conditions.

In the second part of the paper, we studied the stability of interconnected systems. We presented a simple proof for a result that states that an interconnection of dissipative systems is stable if the sum of their supply rates is strictly negative. We applied this principle to obtain a frequency weighted IQC-based loop gain stability condition for a feedback system.

## Acknowledgments

This research is supported by the Belgian Federal Government under the DWTC program Interuniversity Attraction Poles, Phase V, 2002–2006, Dynamical Systems and Control: Computation, Identification and Modelling, by the KUL Concerted Research Action (GOA) MEFISTO–666, and by several grants en projects from IWT-Flanders and the Flemish Fund for Scientific Research.

# References

[1] C.A. Desoer and M. Vidyasagar, *Feedback Systems: Input-Output Properties*, Academic Press, 1975.

[2] D. Hinrichsen and A.J. Pritchard, *Mathematical Systems Theory I: Modelling, State Space Analysis, Stability and Robustness*, Springer–Verlag, 2005.

[3] A. Hurwitz, Über die Bedingungen, unter welchen eine Gleichung nur Wurzeln mit negativen reellen Theilen besitzt, *Mathematische Annalen*, volume 46, pages 273–284, 1877.

[4] R.E. Kalman, Lyapunov functions for the problem of Lur'e in automatic control, *Proceedings of the National Academy of Sciences of the USA*, volume 49, pages 201–205, 1963.

[5] J.C. Maxwell, On governors, *Proceedings of the Royal Society of London*, volume 16, pages 270–283, 1868.

[6] A. Megretski and A. Rantzer, System analysis via integral quadratic constraints, *IEEE Transactions on Automatic Control*, volume 42, pages 819–830, 1997.

[7] J.W. Polderman and J.C. Willems, *Introduction to Mathematical Systems Theory: A Behavioral Approach*, Springer-Verlag, 1998.

[8] V.M. Popov, Absolute stability of nonlinear systems of automatic control, *Automation and Remote Control*, volume 22, pages 961–979, 1961.

[9] E.J. Routh, *A Treatise on the Stability of a Given State of Motion*, MacMillan, 1877.

[10] M.G. Safonov, *Stability and Robustness of Multivariable Feedback Systems,* The MIT Press, 1980.

[11] I.W. Sandberg, On the properties of some systems that distort signals (I and II), *Bell System Technical Journal*, volume 42, pages 2033–2047, 1963, and volume 43, pages 91–112, 1964.

[12] I.W. Sandberg, On the $\mathscr{L}_2$-boundedness of nonlinear functional equations, *Bell System Technical Journal*, volume 43, pages 1581–1599, 1964.

[13] H.L. Trentelman and J.C. Willems, Every storage function is a state function, *Systems & Control Letters,* volume 32, pages 249–259, 1997.

[14] M. Vidyasagar, *Nonlinear Systems Analysis*, Prentice Hall, 1978.

[15] M. Vidyasagar, *Control System Synthesis*, The MIT Press, 1985.

[16] J.C. Willems, *The Analyis of Feedback Systems,* The MIT Press, 1971.

[17] J.C. Willems, Dissipative dynamical systems - Part I: General theory, Part II: Linear systems with quadratic supply rates, *Archive for Rational Mechanics and Analysis,* volume 45, pages 321–351 and 352–393, 1972.

[18] J.C. Willems, Paradigms and puzzles in the theory of dynamical systems, *IEEE Transactions on Automatic Control*, volume 36, pages 259–294, 1991.

[19] J.C. Willems, On interconnections, control and feedback, *IEEE Transactions on Automatic Control*, volume 42, pages 326–339, 1997.

[20] J.C. Willems and H.L. Trentelman, On quadratic differential forms, *SIAM Journal on Control and Optimization*, volume 36, pages 1703–1749, 1998.

[21] V.A. Yakubovich, The solution of certain matrix inequalities in automatic control theory, *Doklady Akademii Nauk SSSR*, volume 143, pages 1304–1307, 1962.

[22] V.A. Yakubovich, The frequancy theorem in control theory, *Siberian Mathematics Journal*, volume 14, pages 384–419, 1973.

[23] G. Zames, On the input-output stability of time-varying nonlinear feedback systems. Part I: Conditions derived using concepts of loop gain, conicity, and positivity; Part II: Conditions involving circles in the frequency plane and sector nonlinearities, *IEEE Transactions on Automatic Control*, volume 11, pages 228–238 and 465–476, 1966.