© 2005 Elsevier B.V./Ltd. All rights reserved.

Control of the Synthesis Section of a Urea Plant by means of an MPC Controller

Oscar Mauricio Agudelo Mañozca [a], Jairo José Espinosa [b], Joos Vandewalle [a]

[a] *Katholieke Universiteit Leuven, Electrical Engineering Department (ESAT), Research Group SCD, Kasteelpark 10, B-3001 Leuven, Belgium.*
{mauricio.agudelo, joos.vandwalle}@esat.kuleuven.be
[b] *IPCOS N.V ISMC office, Technologielaan 11/0101 B-3001 Leuven, Belgium.*
jairo.espinosa@ipcos.com.

Abstract

The control of the synthesis section of a urea plant is a challenge due to delays, recirculation flows and large residence times. This paper presents the results of applying MPC control techniches for controlling the synthesis section of a urea process. The control system stabilizes the syntehsis section while maximizing the throughput of the synthesis section by maximizing the feeding flows. This control scheme keeps the main variables (NH_3/CO_2 ratio, reactor level, reactor pressure and reactor temperature) on their desired values or within a defined operating range. The results obtained with this control scheme showed improved stability and increased production.

Keywords: Predictive control, Process Control, Chemical Industry, Multivariable systems, PID controllers.

1. Introduction

In the last decades, model predictive control (MPC) has been widely accepted by the industry, mainly because of its ability to handle constraints explicitly and the natural way in which it can be applied to multivariable processes [6]. Initially, MPC was applied to meet the specialized control needs of power plants and petroleum refineries, nowadays this control technology can be found in a wide variety of application areas including chemicals, food processing, automotive, aerospace, metallurgy, and pulp and paper.

This paper presents the results of using an MPC controller to control the synthesis section of a urea plant. The control integrates the reactor, condenser and stripper units providing maximum integration of the plant via the control system. The controller acts dynamically improving the operating point according to the dynamic limits of the process and exploits the embedded optimization of the MPC to maximize the production.

In order to test the control scheme, a complete and very accurate urea model has been used. Such model was developed by *Protomation* and it has been implemented in a software package called *Process Studio*, which was created by the same company. For the Implementation of the MPC strategy, an industrial MPC controller developed by *IPCOS* has been used. This MPC controller is called *INCA Suite*[7], and it was interconnected with *Process Studio* via OPC (OLE for Process Control) to control the urea model.

2. Description of the Process

The urea simulator developed by *Protomation*, models a "Stamicarbon Urea CO_2 Stripping Process" [2], where we can distinguish 4 sections: *synthesis*, *recirculation*, *evaporation and finishing technique* and *waste water treatment*.

In a CO_2 stripping process, ammonia (NH_3) and carbon dioxide (CO_2) are fed directly into the *synthesis section,* where at high pressure (13-30 MPa) and high temperature (170-200°C) the urea formation takes place, according to the following reactions:

$$2NH_3 + CO_2 \rightarrow NH_2COONH_4 + (\text{heat}) \quad (1)$$

$$NH_2COONH_4 \Leftrightarrow NH_2CONH_2 + H_2O - (\text{heat}) \quad (2)$$

In reaction (1), ammonia and carbon dioxide are converted into ammonium carbamate (NH_2COONH_4). This reaction is highly exothermic and fast. In the reaction (2), ammonium carbamate dehydrates to produce urea and water. Unlike reaction (1), reaction (2) is slow and endothermic.

Figure 1 shows a block diagram of the synthesis section. In order to achieve maximum urea conversion the process requires a molar ratio of 3 among ammonia and carbon dioxide (NH_3/CO_2) at the outlet of the urea reactor [3].

The urea formation takes place in the pool condenser and in the urea reactor. Since part of the ammonia and carbon dioxide are not converted to urea and water, the reaction mixture coming from the urea reactor is subjected to a stripping process (it occurs in the CO_2 Stripper), where carbon dioxide is used to remove the unreacted NH_3 and CO_2. The off-gases (NH_3 and CO_2) from the stripping process are introduced into the pool condenser together with the carbamate solution from the High-Pressure scrubber and fresh ammonia. The gases leaving the reactor are fed into the High-Pressure Scrubber where they are washed with the carbamate solution from the *recirculation stage* [3]. Thus a major portion of gases is recovered and returned to the pool condenser [4]. The inert gases and some ammonia and carbon dioxide coming from the scrubber are washed in a low-pressure absorber, thereby minimizing ammonia emissions.

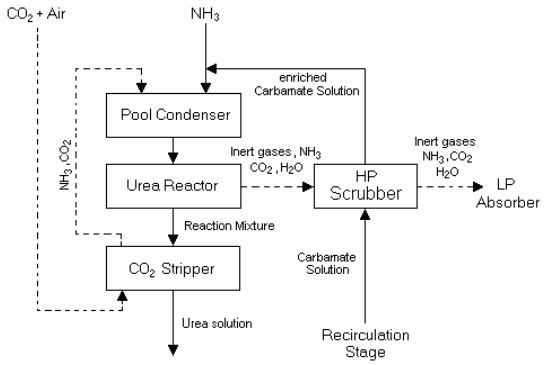

Fig 1. Block diagram of the Synthesis Section

In the *recirculation section* unconverted ammonia and carbon dioxide are removed from the urea solution. These unconverted materials are condensed, forming a carbamate solution which subsequently is recycled to the *synthesis section*. The urea

solution after the removal of the unreacted carbamate, ammonia and carbon dioxide is sent to the *evaporation section* where the water in the urea solution is removed. Afterwards, the urea melt is sent to the *granulation unit* (finishing technique) where the formation of the urea granules takes place. Finally, the condensated material coming from the *evaporation stage* is sent to the *waste water treatment* section, where residual ammonia and carbon dioxide present in the process condensate are removed and sent back to the *recirculation stage*.

3. MPC Control of the production of the Synthesis Section

Figure 2 shows a control scheme designed to maximize the production of the synthesis section of a urea plant [1]. The goal is achieved by maximizing the feeding flows (NH_3 and CO_2). This objective is accomplished while keeping the NH_3/CO_2 ratio, the reactor level and the reactor pressure on their desired values and the reactor temperature within a defined operating range. In this control scheme the production of urea can be set by selecting the setpoint of the NH_3 flow rate controller (FRC106). In this way, if the setpoint of the NH_3 flow rate controller is augmented, the amount of urea produced will be increased. Since the reactor level shows an integral behavior and *INCA Suite* can deal only with stable processes, it was necessary to stabilize the reactor level by means of a proportional controller (LIC201). The manipulated variable of this proportional controller is the position of the valve HIC201 that has a direct impact on the reactor level. This valve also influences the reactor residence time (conversion) and traditionally it has been operated manually in the urea plants; with this control scheme such valve is manipulated by the MPC through the LIC201 controller.

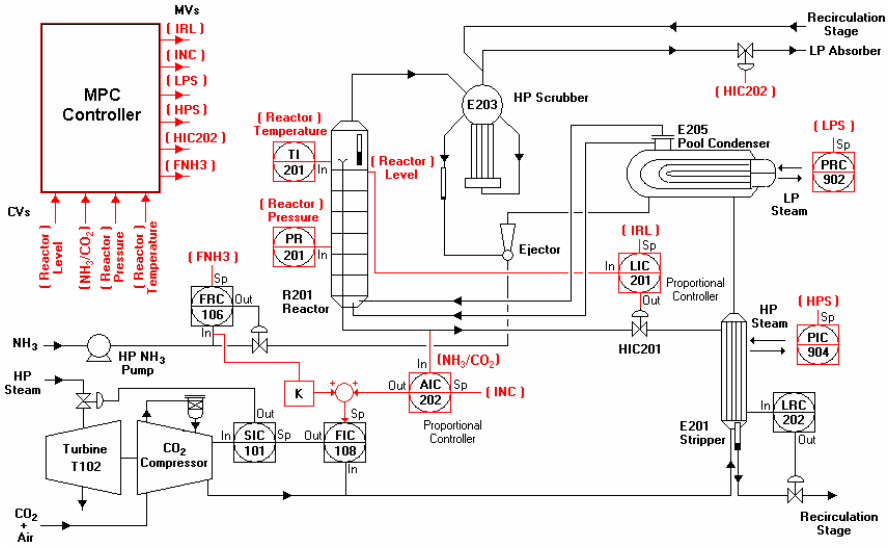

Fig 2. Control diagram for controlling the production of the synthesis section.

In order to have a good disturbance rejection for the NH_3/CO_2 ratio, this control system has a feed-forward action in the PID Loops. The setpoint of the CO_2 flow rate controller (FIC108) is determined by the NH_3 flow rate multiplied by a constant *K* (feed-forward action) plus the output of the AIC202 proportional controller. The function of the

AIC202 controller is to stabilize and to allow setpoint changes of the NH_3/CO_2 ratio at the reactor outlet.

For the MPC controller, the manipulated variables are the setpoint of the LIC201 controller (IRL), the setpoint of the AIC202 controller (INC), the setpoint of the PRC902 (LPS – Low pressure steam controller, which has a direct impact on the carbamate reaction), the setpoint of the PIC904 controller (HPS – High pressure steam controller, which influences the stripper efficiency), the position of the HIC202 valve (HIC202, which influences the reactor pressure) and the setpoint of the FRC106 controller (FNH3 – NH_3 flow rate controller). The controlled variables are the reactor level, the NH_3/CO_2 ratio at the outlet of the reactor, the reactor pressure (PR201) and the reactor temperature (TI201). Observe that there are more MV's than CV's this feature provides an extra freedom for the system to search the optimal operating point.

Sub-space multivariable identification (N4SID [5]) was used to obtain the mathematical model (in this case a multivariable linear model) that allows the MPC to predict the future behavior of the process. The order of the model was selected by the singular values of the Hankel Matrix. The estimated order was 9. The model was validated by comparing the simulated and the predicted outputs. The operating ranges of the manipulated variables of the MPC controller were chosen very carefully to avoid problems with the downstream sections of the urea plant. The tuning of the parameters of the MPC controller was performed in a trial-and-error procedure.

For evaluating the performance of the MPC controller the ideal resting value (value where this MV should go) of the NH_3 flow rate was changed from 77.2 t/h (nominal value) to 80.5 t/h. The setpoints (nominal values at full load) of the reactor level, the NH_3/CO_2 ratio, the reactor pressure and the reactor temperature were kept on 50%, 3, 144.6 barg and 181.96ºC respectively. It is important to mention that the carbamate solution coming from the recirculation stage constitutes one of the main disturbances for the synthesis section. Figure 3 shows the increment of the flow of urea solution leaving the synthesis section (throughput) during the experiment. At initial steady state conditions, the throughput of the synthesis section was 241.82 t/h of urea solution. Once the NH_3 flow rate was increased from 77.2 t/h to 80.5 t/h the new throughput of the process in steady state conditions was 253.63 t/h of urea solution. We have obtained an increment of 11.81 t/h in the throughput of the synthesis section. Of course, the achievable improvement on a real plant will depend strongly on the bottlenecks of the given plant.

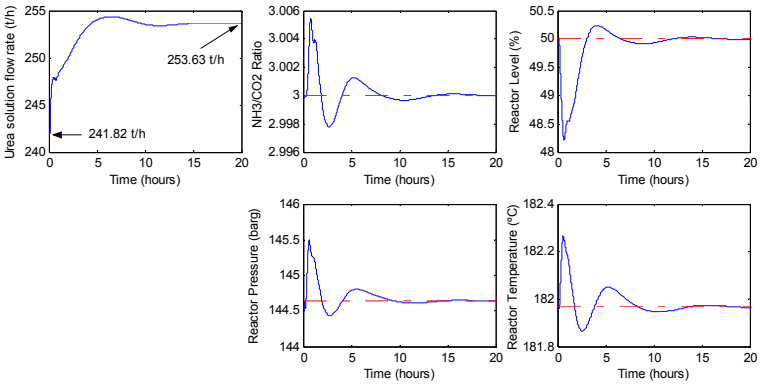

Fig 3. Urea solution flow rate and controlled variables during the experiment

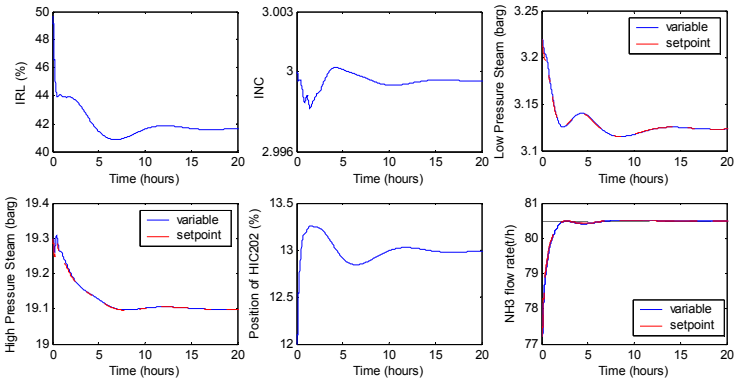

Fig 4. Manipulated variables during the experiment

Figures 3 and 4 show the controlled variables and the manipulated variables of the MPC controller along the test. From figure 3 it is remarkable how the controlled variables are kept close to their setpoints. So, the maximum peak for the NH_3/CO_2 ratio is only 0.0053, for the reactor level is only 1.79 %, for the reactor pressure is 0.88 barg and for the reactor temperature is 0.3°C. In figure 4 one can observe how the ammonia flow rate is changed by the MPC controller slowly from 77.2 t/h to 80.5 t/h. During the experiment the downstream sections of the plant were operating without problems. The control scheme presented has increased the production while keeping the unit under control. Although it is not shown in this paper, this control scheme can also perform setpoint changes for the NH_3/CO_2 ratio, the reactor pressure, and the reactor level. Independent setpoint changes in the reactor temperature are not possible since the reactor temperature is linked to the reactor pressure.

4. Final comments and Conclusion

In this paper the results of using an MPC control scheme for controlling the synthesis section of a urea process have been presented. The main goal of this control system was to maximize the throughput of the synthesis section by maximizing the feeding flows. Additionally this control scheme kept the NH_3/CO_2 ratio under control and also the reactor level, the reactor pressure, and the reactor temperature. The results obtained with this control scheme were fairly good from the control point of view and from the production point of view. The increment of the production was limited by the maximum feeding flow capacity usually limited by the available raw material or feeding facilities like the CO_2 compressor. However every plant can have its limitation on a different unit.

Acknowledgements

The authors would like to acknowledge the support of IPCOS ISMC office, Rob Faessen from Protomation and Klement K. Riegman from Stamicarbon. Additionally this research was supported by: ● Research Council KUL: GOA-AMBioRICS, BOF OT/03/12, several PhD/postdoc & fellow grants; ● Flemish Government: - FWO: PhD/postdoc grants, G.0407.02 (support vector machines), G.0080.01 (Collective

Behavior and Optimization), G.0211.05 (Nonlinear Systems), research communities (ICCoS, ANMMM); - IWT: PhD Grants; - Tournesol 2005; - Belgian Federal Science Policy Office IUAP P5/22 ("Dynamical Systems and Control: Computation, Identification and Modelling"). Dr. Joos Vandewalle is a full professor at the Katholieke Universiteit Leuven, Belgium.

References

1. O. M. Agudelo, J. J. Espinosa, J. Vandewalle, "Control of the synthesis section of a urea Plant using MPC control techniques", Internal Report 05-157, ESAT-SISTA, K.U. Leuven, Leuven, Belgium, 2005.
2. Protomation bv, "Process Studio. Application Urea-Operating Manual", Netherlands, 2003.
3. Stamicarbon, "Stamicarbon - Pure Knowledge", http://www.stamicarbon.com
4. Uhde, "Urea Brochure", brochure available in http://www.uhde.biz/ cgi-bin/ byteserver.pl/pdf/broschueren/ Duengemittel/Urea.pdf.
5. P. Van Overschee and B. De Moor, "Subspace Identification of Linear Systems: Theory, Implementation, Applications", Kluwer Academic Publishers, the Netherlands, 1996.
6. D. Henriksson and J. Åkesson, "Flexible Implementation of Model Predictive Control using Sub-optimal Solutions", Internal Report, Department of Automatic Control, Lund Institute of technology, Sweden, April 2004.
7. IPCOS, "INCAengine version 2.1. IPCOS User Manual", Boxtel, Netherlands, 2003.