Katholieke Universiteit Leuven

Departement Elektrotechniek ESAT-SCD/SISTA/TR 2003-145

Chebyshev interpolation for DMT modems[1]

Gert Cuypers[2] , Geert Ysebaert, Marc Moonen,
Fabio Pisoni[3]

June 2004
Published in *proc. IEEE ICC2004*

[1]This report is available by anonymous ftp from *ftp.esat.kuleuven.ac.be* in the directory *pub/sista/cuypers/reports/icc2004.pdf*

[2]K.U.Leuven, Dept. of Electrical Engineering (ESAT), Research group SISTA, Kasteelpark Arenberg 10, 3001 Leuven, Belgium, Tel. 32/16/32 17 09, Fax 32/16/32 19 70, WWW: *http://www.esat.kuleuven.ac.be/sista*. E-mail: *gert.cuypersesat.kuleuven.ac.be*. This research work was carried out jointly by ST Microelectronics and the ESAT laboratory of the Katholieke Universiteit Leuven, in the frame (for KULeuven) of the Belgian Programme on Interuniversity Attraction Poles, initiated by the Belgian Federal Science Policy Office IUAP P5/22 ('Dynamical Systems and Control: Computation, Identification and Modelling') and P5/11 ('Mobile multimedia communication systems and networks'), and the Concerted Research Action GOA-MEFISTO-666 (Mathematical Engineering for Information and Communication Systems Technology) of the Flemish Government. The scientific responsibility is assumed by its authors.

[3] *Fabio Pisoni is a Senior DSP/System Engineer at ST Microelectronics.*

Abstract

Sampling clock synchronization in discrete multi tone systems, such as digital subscriber line modems can be done with a phase locked loop. This requires expensive analog hardware, such as a voltage controlled oscillator. However, it is possible to use a cheaper free-running oscillator and tackle the problem in the digital domain. Using resampling or interpolation, the timing correction becomes transparent for subsequent equalizers. This article describes a novel resampling technique using Chebyshev polynomials.

Chebyshev interpolation for DMT modems

G. Cuypers, G. Ysebaert, M. Moonen
ESAT - SCD
Katholieke Universiteit Leuven
Kasteelpark Arenberg 10
B-3001 Leuven - Heverlee
Email: {cuypers, ysebaert, moonenesat.kuleuven.ac.be

F. Pisoni
TPA/MPU System Innovation
ST Microelectronics
Agrate Brianza (MI), Italy
Email: fabio.pisoni@st.com

***Abstract*— Sampling clock synchronization in discrete multi tone systems, such as digital subscriber line modems can be done with a phase locked loop. This requires expensive analog hardware, such as a voltage controlled oscillator. However, it is possible to use a cheaper free-running oscillator and tackle the problem in the digital domain. Using resampling or interpolation, the timing correction becomes transparent for subsequent equalizers. This article describes a novel resampling technique using Chebyshev polynomials.**

I. Introduction

Discrete multitone (DMT), a modulation system used in e.g. digital subscriver line (DSL) modems divides the available spectrum into small bands. Carriers in these bands are individually digitally modulated using an inverse discrete Fourier transform (IDFT). At the receiver, the transmitted information can be restored using the discrete Fourier transform (DFT). To facilitate equalization, a cyclic prefix (CP) is added to each symbol at transmission, and removed again at the receiver. As long as the channel order does not exceed the CP length, equalization can be done using a frequency domain equalizer (FEQ), which is merely a phase rotation and amplitude correction at each tone individually. Otherwise, more sophisticated equalizer structures are needed.

Several levels of synchronization can be discerned. Symbol synchronization between the central office (CO) and the customer premises (CP) is important to maintain the orthogonality between the carriers. Also the users should be synchronized between each other to avoid excessive crosstalk.

Gert Cuypers is a Research Assistant with the I.W.T. (Flemish Institute for Scientific and Technological Research in Industry). Fabio Pisoni is a Senior DSP/System Engineer at ST Microelectronics. This research work was carried out jointly by ST Microelectronics and the ESAT laboratory of the Katholieke Universiteit Leuven, in the frame (for KULeuven) of the Belgian Programme on Interuniversity Attraction Poles, initiated by the Belgian Federal Science Policy Office IUAP P5/22 ('Dynamical Systems and Control: Computation, Identification and Modelling') and P5/11 ('Mobile multimedia communication systems and networks'), and the Concerted Research Action GOA-MEFISTO-666 (Mathematical Engineering for Information and Communication Systems Technology) of the Flemish Government. The scientific responsibility is assumed by its authors.

At a lower level, synchronization of the sample clocks is important to maintain a good signal to noise ratio. The master clock is generated at the CO, and CP needs to adjust its timing, both in reception and transmission. Usually this is achieved with a voltage controlled oscillator (VCO), adjusted by a phase locked loop (PLL). Timing information (steering the PLL) is usually derived from the data, e.g. using pilot tones. Alternatively, to reduce the cost of analog hardware, one can use a fixed sample clock and correct for it in the digital domain.

A small sample clock offset (delay) leads to a phase error which is linear with the carrier frequency. In the case of a clock frequency mismatch (drift), the phase offset grows from one symbol to the next symbol. When it becomes comparable to the sample duration, a sample is either duplicated or discarded to compensate [1]. While this approach works in practice, these discontinuities of the time axis introduce a non-stationarity at the input of the equalizer, lowering its efficiency.

To circumvent this, a true sample rate convertor is needed. The problem of *interpolation* in communications receivers is well known [2], and is closely related to fractional delay filters. The ideal interpolation filter would be a sampled *sinc* function. Because these extend infinitely in time, they are not useable in practice. However, they can be approximated using a finite impulse response (FIR) filter e.g. having a minimum mean squared error in the frequency band of interest. The *Farrow structure* [3] offers an efficient way to implement variable delays, writing the FIR taps as a polynomial function of the (fractional) delay. However, designing the filters is difficult, especially if the delay compared to the original sample points is small [4]. It may therefore be easier and sufficiently accurate to use *polynomial interpolation* instead of (an approximation of) real Nyquist interpolation.

The paper is structured as follows: in section II we

0-7803-8533-0/04/$20.00 (c) 2004 IEEE

start with a brief review of Chebyshev interpolation theory and the role of Chebyshev polynomials. In section III, two interpolation methods, based on Cmhebyshev polynomials are described. Some simulation results are given in section IV to prove their validity. Finally, section V concludes with a short discussion.

II. Chebyshev interpolation theory

The polynomial of degree N interpolating the continuous function $f(x)$ at the $N+1$ distinct points $x_0 \dots x_N$ can be written as:

$$p_N(x) = \sum_{i=0}^{N} l_i(x) f(x_i), \quad \text{with} \tag{1}$$

$$l_i(x) = \prod_{\substack{k=0 \\ k \neq i}}^{N} \left(\frac{x - x_k}{x_i - x_k} \right), \tag{2}$$

the so-called *Lagrange* polynomials. This can also be written in a matrix form,

$$p_N(x) = [f(x_0) \dots f(x_N)] \, \mathbf{L} \begin{bmatrix} x^N \\ \vdots \\ x^0 \end{bmatrix}, \tag{3}$$

where the ith row of the *generating matrix* $\mathbf{L}$ contains the coefficients of $l_i(x)$ in descending powers of x.

There is no restriction on the choice of the points x_i, but in the case of a digital receiver their position is determined by the sample clock, and hence they are equidistant. Unfortunately interpolation on a uniform sampling grid is far from optimal, and leads to a large interpolation error in between the sampling points, especially near the interval edges. This is known as the *Runge phenomenon*, and is comparable to *Gibbs phenomenon* in Fourier series.

We will now look at alternatives to the uniform sampling grid. For the sake of simplicity, but without loss of generality, in the remainder of the text it will be assumed that $|x_i| \leq 1$, i.e. $f(x)$ is interpolated on [-1, 1]. Also, for the reader's convenience, we remind that the Chebyshev polynomials of the first kind $T_N(x)$ are given by:

$$T_N(x) = \begin{cases} 1 & N = 0 \\ x & N = 1 \\ 2xT_{N-1}(x) - T_{N-2}(x) & N = 2, 3, \dots \end{cases} \tag{4}$$

Another definition is that

$$T_N(x) = T_N(\cos(\theta)) = \cos(N\theta). \tag{5}$$

It can now be shown that choosing the interpolation points x_i from (1) at the roots z_i of $T_{N+1}(x)$, i.e.

$$z_i = -\cos \frac{\pi\,(2i+1)}{2(N+1)} \tag{6}$$

leads to a low maximum interpolation error [5], [6]. These so-called *Chebyshev points* z_i are sparse in the middle, and denser at the edges of the interval [-1, 1]. Choosing these points ensures uniform convergence for any continuous function $f(x)$ that satisfies the Dini-Lipschitz condition [1], and convergence in an $\mathcal{L}_2$ norm for all continuous functions $f(x)$. Moreover, interpolation on these points renders the best $\mathcal{L}_2$ approximation of $f(x)$ [7] when the inner product is defined as:

$$< h, g >= \int_{-1}^{1} \frac{h(x)g(x)}{\sqrt{1-x^2}} \tag{7}$$

Obviously, it is now possible to calculate $p_N(x)$ in the Lagrange style of eq.(1), but for this special choice of sample points, one can also write $p_N(x)$ as a summation of normalized Chebyshev polynomials of the first kind:

$$p_N(x) = \sum_{i=0}^{N} c_i . \tilde{T}_i(x), \text{ with} \tag{8}$$

$$\tilde{T}_0(x) = \frac{1}{\sqrt{2}} T_0(x), \; \tilde{T}_{N>0}(x) = T_{N>0}(x) \tag{9}$$

The coefficients c_k of the Chebyshev decomposition can be calculated as the discrete cosine transform (DCT) of the vector of nonuniform samples, taken at z_i [5]. In other words:

$$\begin{bmatrix} c_0 \\ c_1 \\ \vdots \\ c_N \end{bmatrix} = \mathbf{C} \begin{bmatrix} f(z_0) \\ f(z_1) \\ \vdots \\ f(z_N) \end{bmatrix}, \tag{10}$$

with the (m,n)th element of $\mathbf{C}$ equal to

$$\mathbf{C}_{m,n} = v_m \cos \frac{m\pi(2n+1)}{2(N+1)}, \tag{11}$$

$$v_m = \begin{cases} \frac{\sqrt{2}}{N+1} & m = 0 \\ \frac{2(-1)^m}{N+1} & m = 1, \dots, N \end{cases} \tag{12}$$

We can now also write eq. (8) in a matrix form as

$$p_N(x) = [f(z_0) \dots f(z_N)] \, \mathbf{C}^T \mathbf{T} \begin{bmatrix} x^N \\ \vdots \\ x^0 \end{bmatrix}, \tag{13}$$

[1] The Dini Lipschitz condition is stronger than continuity. If $\omega_f(\delta) = \sup(|f(x_1) - f(x_2)|)$ for $|x_2 - x_1| \leq \delta$, then it requires that

$$\lim_{\delta \to 0} \omega_f(\delta) \log(\delta) = 0$$

0-7803-8533-0/04/$20.00 (c) 2004 IEEE

where the ith row of $\mathbf{T}$ contains the coefficients of $\tilde{T}_i(x)$ in descending powers of x.

It may come as a surprise that these coefficients can be be calculated so easily, and that this involves a DCT. However, this result can be understood intuitively if we look at **Figure 1**.

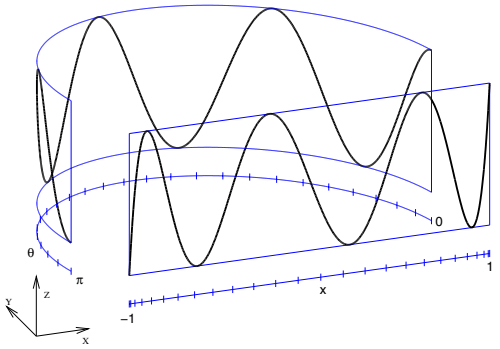

Fig. 1. Cosines on a uniform grid in the θ-plane correspond to Chebyshev polynomials on a nonuniform grid in the XZ-plane

We can think of signals as being a function of x and residing in the XZ-plane. Imagine now we construct a new curved plane, which we call the θ-plane, and which is a semicilinder constructed on the unit circle and extending perpendicular from it. Function pairs in the XZ-plane can now be projected (along the Y-axis) to the θ-plane and vice versa. More specifically, the Chebyshev polynomials in the XZ-plane are transformed to cosines in the θ-plane (cfr. formula (5)). In figure 1, this is shown for $T_7(x)$. Therefore, a decomposition in Chebyshev polynomials in the XZ-plane corresponds to a decomposition into cosines in the θ-plane. Because the nonuniform sampling grid defined in (6) is exactly converted to a *uniform* grid in the θ-plane, the coefficients of this cosine decomposition can be calculated with a (slightly modified) DCT. The alternating signs of v_m are due to the fact that x traverses the XZ-plane from left to right, whereas θ traverses the θ-plane from right to left. All Chebyshev polynomials are either symmetric or antisymmetric. For the latter ones, the minus sign is required.

III. Implementation

As stated before, although the choice of the Chebyshev points may be interesting for the interpolation, in case of a digital receiver, we are limited to a uniform sampling grid. However, it is possible to think of the received signals as not residing in the XZ-plane, but in the θ-plane! This way, we can do a (numerically interesting) cosine decomposition, and interpolate the function in the θ-plane. This evaluation of the cosine expansion at an arbitrary point can be done cheaply by calculating the corresponding Chebyshev series in the XZ-plane.

In practice, we need not change the interpolator at every output, but we can do a block-processing where L output samples are reconstructed based on input blocks of size $P = N + 1$, as shown in **Figure 2**. The original samples are located at $t_0 \dots t_{P-1}$ and have values $y_0 \dots y_{P-1}$, while the samples to be generated, $\tilde{y}_0 \dots \tilde{y}_{L-1}$ are located at $\tilde{t}_0 \dots \tilde{t}_{L-1}$. After all L samples have been generated, the block is shifted over L samples and the process is repeated.

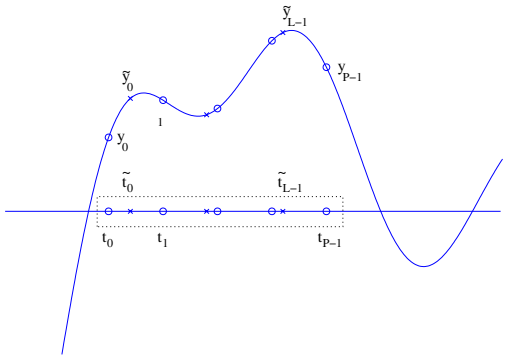

Fig. 2. L output samples at $\tilde{t}_k$ interpolated from P input samples at t_k

We can now think of the function values $y_0 \dots y_{P-1}$ as in the θ-plane and construct the cosine series there. For each block, P coefficients c_i are generated according to eq. (10). In practice, this can be implemented with a fast DCT algorithm. If L is small compared to N, it might be more pratical to compute a sliding DCT [8], [9]. Based on these coefficients, we can now evaluate the cosine series at $\tilde{t}_0 \dots \tilde{t}_{L-1}$ by evaluating the corresponding Chebyshev expansion at $\tilde{x}_0 \dots \tilde{x}_{L-1}$,

$$\tilde{x}_k = \cos\left[\pi\left(\frac{1}{2(N+1)} + \frac{\tilde{t}_k - t_0}{t_{p-1} - t_0}\right)\right], \qquad (14)$$

with $k = 0 \dots L-1$.

The evaluation of the interpolating polynomial can be done in a numerically interesting way. Using the recurrence relation in eq.(4) the summation of Chebyshev polynomials (expansion of eq. 8)

$$c_N T_N(x) + c_{N-1} T_{N-1}(x) + c_{N-2} T_{N-2}(x) + \cdots \qquad (15)$$

0-7803-8533-0/04/$20.00 (c) 2004 IEEE

can be written as

$$\underbrace{(2xc_N+c_{N-1})}_{b_{N-1}}T_{N-1}(x)+(c_{N-2}-c_N)T_{N-2}(x)+\cdots, \tag{16}$$

$$\underbrace{(2xb_{N-1}+c_{N-2}-c_N)}_{b_{N-2}}T_{N-2}(x)+ (c_{N-3}-b_{N-1})T_{N-3}(x)+\cdots \tag{17}$$

The and eventually

$$b_1T_1(x)+b_0T_0(x)=b_1x+b_0. \tag{18}$$

It can be shown that this process is perfectly stable, and rounding errors are not amplified [10]. This scheme is depicted in **Figure 3**.

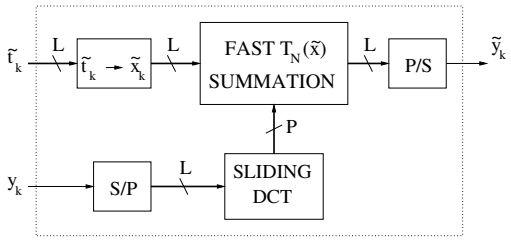

Fig. 3. The Chebyshev interpolator block diagram

Current interpolation implementations [11], [12],... mostly make use of the so-called *Farrow structure* [3]. This is a known and efficient structure to compute a linear combination of polynomials or alternatively it can be seen as an FIR (interpolation-)filter for which the taps are a polynomial in the fractional delay. It is very suited to implement a Lagrange interpolator [12].

Observing the similarity between eq. (3) and eq. (13), it is now possible to write our structure as a Lagrange interpolator with generating matrix $\mathbf{G}=\mathbf{C}^T\mathbf{T}$. If we introduce the calculation of a cosine (going from $\tilde{t}$ to $\tilde{x}$), implemented with a cordic structure [9], we obtain the modified Farrow scheme of **Figure 4**.

It is interesting to note the difference between these two implementations. The first one (fig. 3) uses the recurrence relation (4) to factor (8) into Chebyshev polynomials. The second one (fig. 4) uses a nested multiplication (aka. *Horner's method*) to evaluate a sum of standard polynomials (eq. 13).

IV. Simulation results

We have compared the Chebyshev interpolator with the classic Lagrange implementation.

Because of numerical precision, it is very difficult to generate an accurate DSL signal. The most correct way to do so, would be to do true sinc-interpolation.

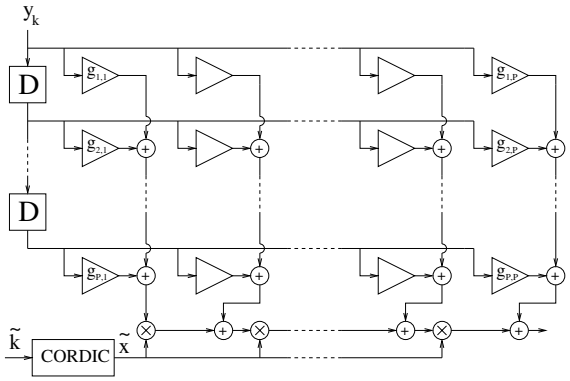

Fig. 4. The modified Farrow structure

Obviously, the sinc function needs to be truncated in time for practical computations, so that a certain error will be introduced. While increasing the number of sinc-samples will reduce this error, this will on the other hand contribute to roundoff-errors (because more terms are summed).

However, because in practice the clock frequency offsets are small (10^{-5}), the offset between the two clocks will not vary significantly over one symbol period. We have therefore set the frequency offset to zero, while assuming a phase-mismatch of half a sample. This corresponds to the worst-case scanario. As a test signal, we chose an ADSL downstream signal without channel noise. Both the Chebyshev and Lagrange interpolator use $P=11$ nodes for the interpolation. One sample was interpolated per frame ($L=1$) and this was chosen in the middle of the frame. The results are shown in **Figure 5**. For low frequencies, the Lagrange interpolator is still better than the Chebyshev structure. However, as the frequency increases, the Lagrange structure's performance degrades quicky. This is a general characteristic of interpolators, because they implement an approximation of the ideal sinc filter. Oversampling can solve this problem, and is sometimes used (e.g. [11]), but comes at the cost of increased complexity.

The Chebyshev interpolator also suffers from some degradation at higher frequencies, but manages to keep its performance until very close to the Nyquist frequency.

V. Conclusions

A cosine interpolation technique using Chebyshev polynomials was proposed, which does not suffer from the *Runge* phenomenon. Essentially, it is made up by a trigonometric (cosine) series which is converted to a summation of Chebyshev polynomials. The implementation can be done efficiently, using a fast DCT and a

0-7803-8533-0/04/$20.00 (c) 2004 IEEE

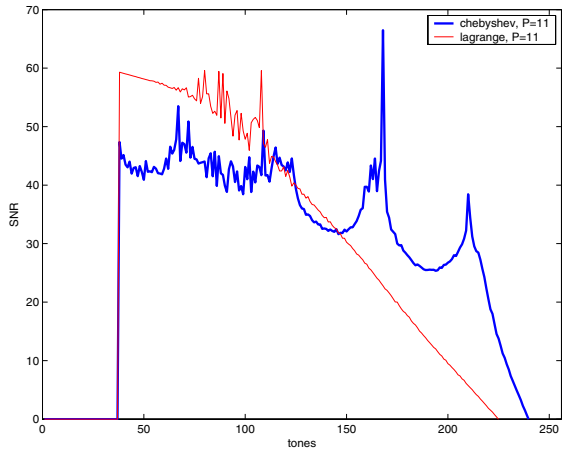

Fig. 5. Comparison of Chebyshev and Lagrange interpolation. Fractional delay is 1/2 sample

special summation scheme for Chebyshev polynomials. However, it can also be molded for use with the Farrow structure, which is a well-known and efficient scheme. Simulation results confirm the useability of the proposed techniques for interpolation in DMT communications system such as DSL. The proposed architectures can also be applied in other areas of signal processing where an interpolation is necessary, e.g. communications systems, image processing, audio resampling etc.

ACKNOWLEDGMENT

The authors would like to thank the reviewers for their time and valuable comments

REFERENCES

[1] J.M. Cioffi, P. Silverman, and T. Starr, *Understanding Digital Subscriber Line Technology*, Prentice Hall, first edition, 1999.

[2] Heinrich Meyr, Marc Moeneclaey, and Stefan A. Fechtel, *Digital communication receivers*, Wiley, first edition, 1998.

[3] C.W. Farrow, "A continuously variable digital delay element," in *Circuits and Systems, 1988., IEEE International Symposium on*, 2641-2645, vol. 3, p. 1988.

[4] V. Välimäki and T.I. Laakso, "Principles of fractional delay line filters," in *Acoustics, Speech, and Signal Processing, 2000 IEEE International Conference on*, 2000, vol. 6, pp. 3870–3873.

[5] Victor-Emil Neagoe, "Chebyshev nonuniform sampling cascaded with the discrete cosine transform for optimum interpolation," *IEEE trans. acoust. speech and sig. proc.*, vol. 38, no. 10, pp. 1812–1815, 1990.

[6] Theodore J. Rivlin, *The Chebyshev polynomials*, pp. 12–, Wiley, 1974.

[7] J.C. Mason and D.C. Handscomb, *Chebyshev polynomials*, pp. 145–163, Chapman & Hall/CRC, 2003.

[8] P. Yip and K.R. Rao, "On the shift property of dct's and dst's," *IEEE trans. acoust. speech and sig. proc.*, vol. 35, no. 3, pp. 404–406, 1987.

[9] Dulal C. Kar and V.V. Bapeswara Rao, "A cordic-based unified systolic architecture for sliding window applications of discrete transforms," *IEEE Transactions on Signal processing*, vol. 44, no. 2, pp. 441–444, 1996.

[10] L. Fox and I.B Parker, *Chebyshev polynomials in numerical analysis*, pp. 55–58, Oxford university press, 1968.

[11] Thierry Pollet and Miguel Peeters, "A new digital timing correction scheme for dmt systems combining temporal and frequential signal properties," in *Communications 2000, IEEE International conference on*, 2000, vol. 3, pp. 1805–1808.

[12] Lars Erup, Floyd M. Gardner, and Robert A. Harris, "Interpolation in digital modems- part ii: Implementation and performance," *IEEE Transactions on Communications*, vol. 41, no. 6, pp. 998–1008, 1993.

0-7803-8533-0/04/$20.00 (c) 2004 IEEE