Katholieke Universiteit Leuven

Departement Elektrotechniek

ESAT-SISTA/TR 1997-119

Para-Unitary Filter Bank Design for Oversampled Subband Systems [1]

Koen Eneman, Marc Moonen [2]

December 1997
rev. July 1998

[1]This report is available by anonymous ftp from *ftp.esat.kuleuven.ac.be* in the directory *pub/SISTA/eneman/reports/97-119.ps.gz*

[2]ESAT (SISTA) - Katholieke Universiteit Leuven, Kardinaal Mercierlaan 94, 3001 Leuven (Heverlee), Belgium, Tel. 32/16/321809, Fax 32/16/321970, WWW: *http://www.esat.kuleuven.ac.be/sista*. E-mail: *koen.eneman@esat.kuleuven.ac.be* Marc Moonen is a Research Associate with the F.W.O. Vlaanderen (Flemish Fund for Science and Research). This research was carried out at the ESAT laboratory of the Katholieke Universiteit Leuven and was partly funded by the Concerted Research Action MIPS (Model-based Information Processing Systems) and F.W.O. project nr. G.0295.97 of the Flemish Government, and the Interuniversity Attraction Pole (IUAP-nr.02) initiated by the Belgian State, Prime Minister's Office for Science, Technology and Culture. The scientific responsibility is assumed by its authors.

Para-Unitary Filter Bank Design for Oversampled Subband Systems

Koen Eneman *Marc Moonen*

ESAT - Katholieke Universiteit Leuven
Kardinaal Mercierlaan 94, 3001 Heverlee - Belgium

koen.eneman@esat.kuleuven.ac.be marc.moonen@esat.kuleuven.ac.be

Filter banks are widely used in digital signal processing, often integrated in a multirate scheme in order to reduce the implementation cost. Oversampled subband schemes are attractive here as they trade off between complexity gain and aliasing errors. Ideally, the overall effect of a subband system is that of a pure delay. In this paper we will discuss design techniques for (nearly) perfect reconstruction oversampled DFT modulated filter banks. Some design procedures and design results will be shown.

1 Introduction

Filter banks are widely used in digital signal processing. Typical applications are subband adaptive filtering, subband coding or more generally, frequency-dependent signal processing. Subband splitting is a powerful technique to improve the performance of standard algorithms which are applicable to wideband signals such as speech, audio and images. Furthermore, the combination of filter banks with multirate techniques leads to a reduced implementation cost. A general subband scheme is shown in figure 1. The analysis filter bank splits the input signal x in M subbands which are N-fold downsampled. Intermediate operations such as coding or adaptive filtering are then performed on the subbands at the downsampled rate. A recombination operation takes place in the synthesis filter bank which operates on the upsampled subband channels. Optimal computation savings can be made when the subbands are maximally decimated, i.e. when $M = N$, but these critically downsampled subband systems tend to suffer from inter-band aliasing. This often has an impeding effect on the intermediate operations. From this point of view oversampled subband schemes are more attractive as they trade off between complexity gain and aliasing errors. Ideally, the overall effect of a subband system is that of a pure delay, i.e. the subband system is perfectly reconstructing. In this paper we discuss design techniques for (nearly) perfect reconstruction oversampled DFT modulated filter banks.

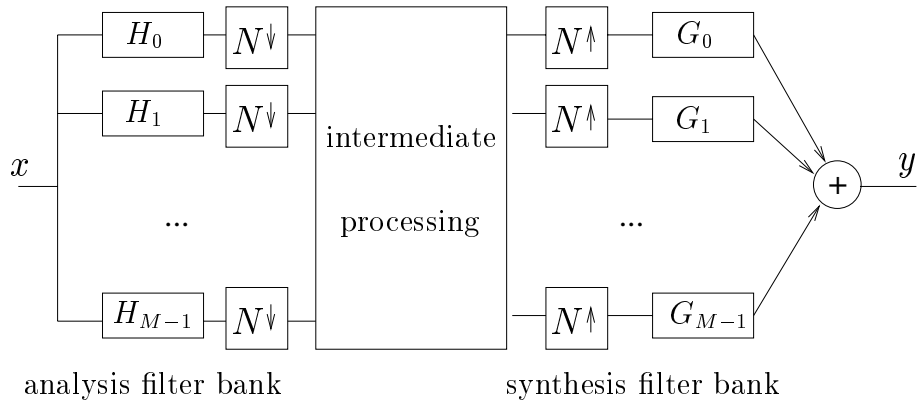

Figure 1: Subband scheme

2 Filter Banks

Filter banks are essential building blocks (fig. 1) and should be designed with care. A tutorial and guideline for filter bank design can be found in [5]. We will briefly address filter bank theory and point out what choices should be made for subband system design. A filter bank is a set of parallel filters which typically covers the whole frequency spectrum. Filter banks can have uniformly or non-uniformly spaced filters. Non-uniformly spaced filter banks often have logarithmic spacing and can be tree- or wavelet-based. They might be more suitable for perceptual applications such as audio or video signals. Uniformly spaced filter banks are typically obtained by frequency shifting or modulating a well-designed low-pass prototype filter. Hence they are called *modulated filter banks*. Modulated filter banks can be easily implemented by decomposing the prototype filter in its polyphase components followed by a DFT or DCT operation. This can be done efficiently using fast signal transforms.

After subband splitting and downsampling in the analysis bank a restore operation is finally needed in the synthesis bank. The overall transfer function is a measure of the effect and performance of the subband system. Ideally, the signal coming out should be an exact (delayed) version of what came in. In practice small amplitude or phase distortion, aliasing and quantisation related errors are tolerated. Depending on the specific design strategy used one or more of these artefacts are eliminated by construction or are at least significantly reduced. The ideal case where the input is just an exact delayed copy of the output is called *perfect reconstruction*. Apart from distortion filter banks are compared based on their frequency selectivity and implementation cost.

A lot of attention has been paid to the design of aliasing-free or perfect reconstruction FIR digital filter banks for almost 20 years. Initially a maximally decimated, two-channel *Quadrature Mirror Filter bank* was proposed. A simple relation between the analysis and

synthesis filters ensures aliasing-free operation. Power symmetry[1] of the lowpass analysis filter and a special relation between the lowpass and highpass analysis filter ensures perfect reconstruction.

The extension to M-channel maximally decimated filter banks was done via polyphase decomposition of the analysis and synthesis filter bank. The polyphase components of the different filters are contained in the so-called analysis and synthesis polyphase matrix. For FIR filter banks perfect reconstruction can be ensured if the determinant of the analysis bank polyphase matrix takes on the form αz^{-K}. *Para-unitary*[2] and *unimodular*[3] polyphase matrices therefore lead to perfect reconstruction FIR filter banks.

Cosine modulated filter banks are very appealing as the subband filters are restricted to be real. Roughly spoken, complex operations are 4 times more expensive than real operations. $2M$ complex filters are combined to obtain a set of M real cosine modulated filters. The prototype filter is supposed to be a good lowpass filter, blocking frequencies above $\frac{f_s}{2M}$, so only aliasing effects from neighbouring bands have to be taken in account. An optimisation procedure trying to reconcile good bandpass characteristics with a small amplitude distortion leads to so-called *pseudo-QMF cosine modulated filter banks*. They do not have perfect reconstruction. By imposing para-unitariness on the analysis bank polyphase matrix also *perfect reconstruction cosine modulated filter bank* design is feasible. The para-unitary constraint comes down to imposing pairwisely power complementarity on a set of prototype polyphase components. An efficient and numerically stable implementation is based on fast cosine transforms and lossless lattices.

Most oversampled subband schemes are based on DFT modulated filter banks for their aliasing robustness and ease of implementation. Cosine modulated filters have a positive and negative frequency band. They often overlap after downsampling and introduce aliasing within the subbands. Overall aliasing cancellation does not exclude aliasing within the subbands. In case of subband adaptive filtering, aliasing will cause the adaptive filter convergence to degrade and is not desirable. On the contrary, DFT modulated filters can be designed with aliasing levels as low as wanted.

Optimal computation savings are obtained for critically or maximally decimated subband schemes. The (maximal) decimation factor is then equal to the number of subbands. The filter bank and the intermediate operations (see figure 1) are all done at the lower sampling rate. Filter banks have a certain, restricted filter order, so their transition bands have a non-negligible width. Therefore, critically downsampled subband systems always suffer from inter-band aliasing. Perfect reconstruction design for critically downsampled DFT modulated filter banks is well-known and was already addressed before. It leads to the design of para-unitary or unimodular polyphase matrices. For further information we refer to [5][6][8][9].

When inter-band aliasing is an unwanted side-effect (as with subband adaptive filtering

[1] A filter $F(z)$ is called power symmetric if $\tilde{F}(z)F(z) + \tilde{F}(-z)F(-z) = 1$; $\tilde{F}(z) = F_*(z^{-1})$. $F_*(z)$ is identical to $F(z)$ except that all filter coefficients are complex conjugated.

[2] A polyphase matrix $\mathbf{H}(z)$ is para-unitary if $\tilde{\mathbf{H}}(z)\mathbf{H}(z) = cI_r$; $\tilde{\mathbf{H}}(z) = \mathbf{H}_*^T(z^{-1})$.

[3] A polyphase matrix $\mathbf{H}(z)$ is unimodular if its determinant is a non-zero constant.

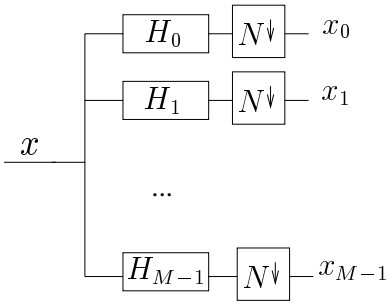

Figure 2: Filter bank with M subbands followed by N-fold downsamplers

for instance) oversampled filter banks are preferred. The subsampling factor N typically varies between $\frac{M}{2}$ and M, with M the number of subbands. Perfect reconstruction design for oversampled DFT modulated filter banks can be found in more recent publications such as [2][3][4][7]. It is explained more in detail in the next paragraph.

3 FIR oversampled filter bank design

The design of DFT modulated para-unitary subband systems in general is discussed in a first sub-paragraph. The special case of systems with oversampling factor 2 is briefly discussed in a following paragraph.

3.1 M > N

A general subband scheme was already presented in figure 1. In case of oversampled subband systems, the number of subbands M is larger than the subsampling factor N.

3.1.1 Analysis part

Consider an FIR filter bank with subband filters $h_0(k)$ till $h_{M-1}(k)$ (see figure 2).
In case of a DFT modulated filter bank, the analysis filters are derived from a single real prototype filter $h_0(k)$ as follows :

$$h_i(k) = h_0(k)e^{-j\frac{2\pi ki}{M}} \tag{1}$$

$$\leftrightarrow$$

$$H_i(z) = H_0(e^{j\frac{2\pi i}{M}}z) \tag{2}$$

The analysis filters are frequency shifted versions of each other and the complete set of M filters covers the whole frequency spectrum. If the signals passing through the M-band

analysis bank are subsequently downsampled N times, the filter bank can be implemented more efficiently by decomposing each subband filter in its N-th order polyphase components

$$H_i(z) = \sum_{n=0}^{N-1} z^{-n} H_{i_{n:N}}(z^N) \tag{3}$$

$H_{i_{n:N}}(z)$ is the n-th component of the N-th order polyphase decomposition of $h_i(k)$:

$$H_{i_{n:N}}(z) \leftrightarrow h_{i_n}(Nk) = h_i(n + Nk) \tag{4}$$

Swapping the polyphase components and the downsamplers leads to a more efficient implementation. The filter operations are now done at a lower sampling rate.
Each subband filter then takes on the form :

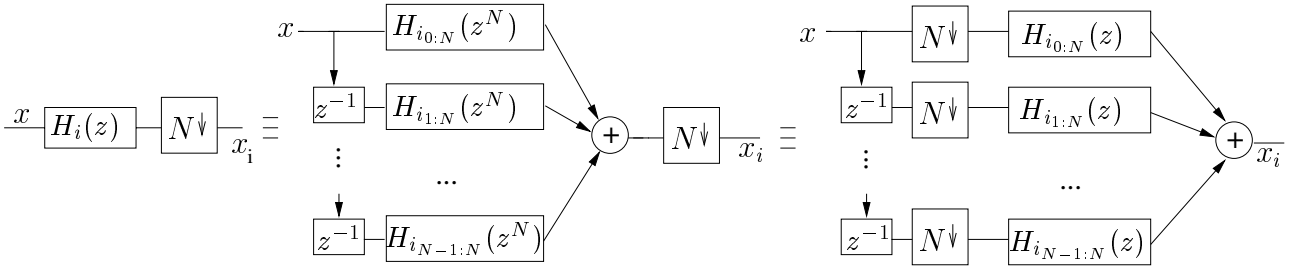

Figure 3: Subband filter polyphase decomposition

Implementation costs can be further reduced by taking in account the relation between the subband filters and their prototype $h_0(k)$.
Suppose K is the least common multiple of M and N, so $K = JM = LN$ and J and L are coprime. $h_{i_n}(Nk)$ can now be decomposed as follows :

$$h_{i_n}(Nk) = \begin{cases} h_{i_n}(Km) & \text{if } Km = Nk, \\ h_{i_{n+N}}(Km) & \text{if } N + Km = Nk, \\ \ldots & \ldots \\ h_{i_{n+(L-1)N}}(Km) & \text{if } (L-1)N + Km = Nk. \end{cases} \tag{5}$$

so

$$H_{i_{n:N}}(z) = \sum_{l=0}^{L-1} z^{-l} H_{i_{(n+lN):K}}(z^L) \tag{6}$$

Relating this to the prototype filter (Eq. 2) :

$$H_{i_{n:N}}(z) = \sum_{l=0}^{L-1} z^{-l} e^{-j\frac{2\pi i(n+lN)}{M}} H_{0_{(n+lN):K}}(z^L) \tag{7}$$

From (3) and (6) :

$$H_i(z) = \sum_{n=0}^{N-1} z^{-n} \sum_{l=0}^{L-1} z^{-lN} H_{i_{(n+lN):K}}(z^K) \tag{8}$$

$$H_i(z) = \sum_{n=0}^{N-1} z^{-n} \sum_{l=0}^{L-1} z^{-lN} e^{-j\frac{2\pi i(n+lN)}{M}} H_{0_{(n+lN):K}}(z^K) \tag{9}$$

This comes down to a K-th order polyphase decomposition of the prototype filter. The analysis bank can now be schematically represented as shown in figure 4.

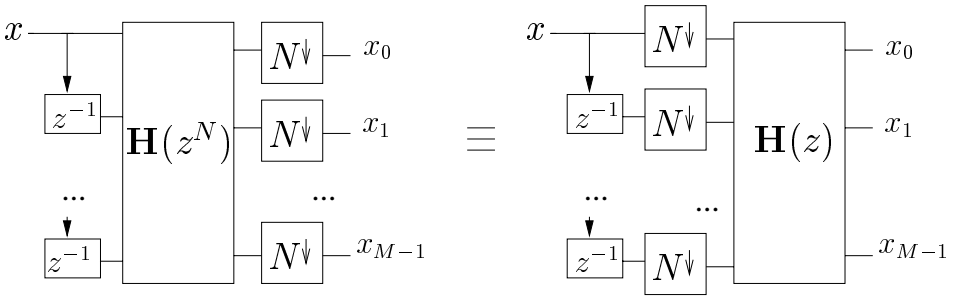

Figure 4: Analysis filter bank

In this figure $\mathbf{H}(z)$ is the N-th order polyphase matrix :

$$[\mathbf{H}(z)]_{ij} = H_{i_{j:N}}(z) \qquad \begin{cases} i = 0 \to M-1 \\ j = 0 \to N-1 \end{cases} \tag{10}$$

Now, in case of a DFT modulated filter bank $\mathbf{H}(z)$ can be factorised as (see also [3])

$$\mathbf{H}(z) = \mathbf{FB}(z) \tag{11}$$

Here, $\mathbf{F}$ is an $M \times M$ DFT matrix : $\mathbf{F}_{nm} = e^{-j\frac{2\pi nm}{M}}$. $\mathbf{B}(z)$ can be found from $\mathbf{F}^{-1}\mathbf{H}(z)$:

$$B_{ik}(z) = \frac{1}{M} \sum_{m=0}^{M-1} e^{j\frac{2\pi im}{M}} H_{m_{k:N}}(z) \tag{12}$$

The product $\mathbf{FB}(z)$ can be computed efficiently by means of an FFT for $M = 2^r, r \in \mathbb{N}$. Now plugging in the equation for $H_{m_{k:N}}(z)$ (Eq. 7) :

$$B_{ik}(z) = \frac{1}{M} \sum_{m=0}^{M-1} e^{j\frac{2\pi im}{M}} \sum_{l=0}^{L-1} z^{-l} e^{-j\frac{2\pi m(k+lN)}{M}} H_{0_{(k+lN):K}}(z^L) \tag{13}$$

$$B_{ik}(z) = \frac{1}{M} \sum_{l=0}^{L-1} z^{-l} H_{0_{(k+lN):K}}(z^L) \sum_{m=0}^{M-1} e^{-j\frac{2\pi m(k+lN-i)}{M}} \tag{14}$$

Matrix $\mathbf{B}(z)$ has the following properties (see also Appendix A) :

- there is at most one value of l (see Eq. 14) smaller than L for which $\sum_{m=0}^{M-1} e^{-j\frac{2\pi m(k+lN-i)}{M}}$ differs from 0. There can only be a non-zero contribution if one can find a set (l,p) such that $l,p \in \mathbb{N}$ and

$$k + lN = i + pM \qquad \begin{cases} l < L \\ p < J \end{cases} \tag{15}$$

  Equation 14 then finally reduces to :

$$B_{ik}(z) = z^{-l} H_{0_{(k+lN):K}}(z^L) \qquad (k + lN) \bmod M = i \tag{16}$$

  Each non-zero entry contains a delay element z^{-l} and an upsampled, K-th order polyphase component of the prototype filter $h_0(k)$.

- $B_{ik}(z) \neq 0 \Rightarrow (i-k) \bmod g = 0$:
  So, $(i-k)$ must be divisible by g, the greatest common divisor of M and N, in order to have a non-zero entry in $\mathbf{B}(z)$.

- the n-th (out of K) polyphase component is located at position (i,k) in $\mathbf{B}(z)$, with $i = n \bmod M$ and $k = n \bmod N$.
  $\mathbf{B}(z)$ has MN entries of which only $\frac{MN}{g}$ can be non-zero, all entries for which $i-k$ is divisible by g will have a contribution of just one polyphase component.

- $\mathbf{B}(z)$ is an $M \times N$ structured matrix in which in each row and each column, $g-1$ zero entries alternate with a non-zero one. The polyphase contributions appear as diagonals in $\mathbf{B}(z)$. $\mathbf{B}(z)$ can be thought of as a set of overlayed $M \times N$-sub-matrices of a diagonal $K \times K$-matrix. We give an example for $M = 6, N = 4, K = 12$ (see figure 5).

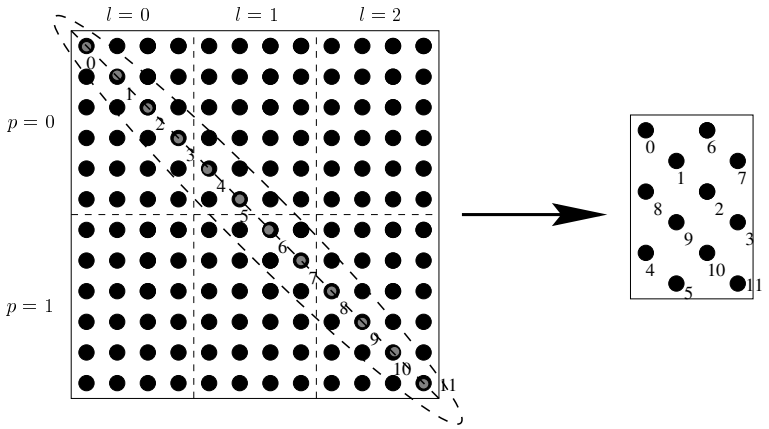

Figure 5: 6x4-sub-matrices in a 12x12 diagonal matrix

- if M and N are relatively prime, $\mathbf{B}(z)$ is a dense matrix
- if M and N have common divisors, $\mathbf{B}(z)$ has several zero entries

- consider just the delay elements. The matrix containing the delay elements z^{-l} is Toeplitz. Moreover, it can be seen as a part of an extended circulant $M \times M$-matrix. If $M = 6, N = 4$ and $K = 12$, the delays are contained in the extended circulant matrix shown in figure 6.

0	x	1	x	2	x
x	0	x	1	x	2
2	x	0	x	1	x
x	2	x	0	x	1
1	x	2	x	0	x
x	1	x	2	x	0

Figure 6: Matrix containing the delays

For the synthesis part an analogous reasoning can be built up.

3.1.2 Synthesis part

After polyphase decomposition of the synthesis filters ($G_i(z) = \sum_{n=0}^{N-1} z^{-n} G_{i_{n:N}}(z^N)$) and swapping the polyphase components and the downsamplers, each subband filter becomes:

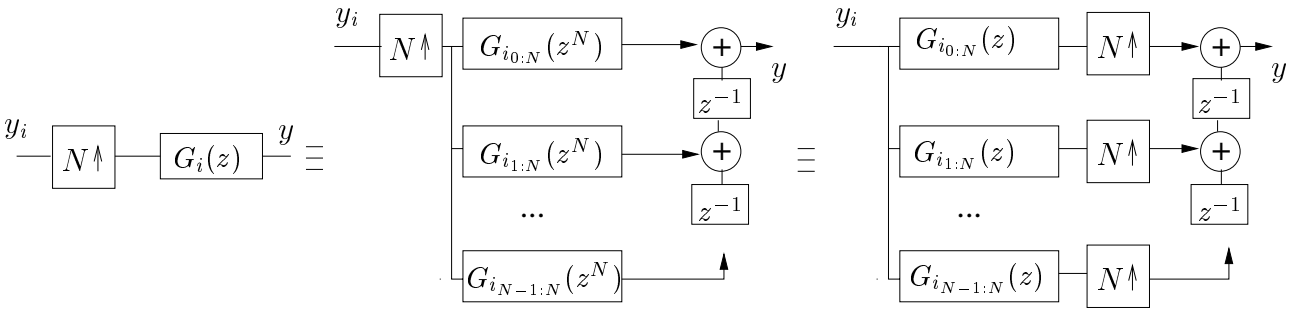

Figure 7: Subband filter polyphase decomposition

The polyphase components are contained in the synthesis polyphase component matrix $\mathbf{G}(z)$ (see [5]) :

$$[\mathbf{G}(z)]_{ij} = G_{i_{j:N}}(z) \qquad \begin{cases} i = 0 \to M-1 \\ j = 0 \to N-1 \end{cases} \tag{17}$$

An oversampled subband system then takes on the form, shown in figure 8.

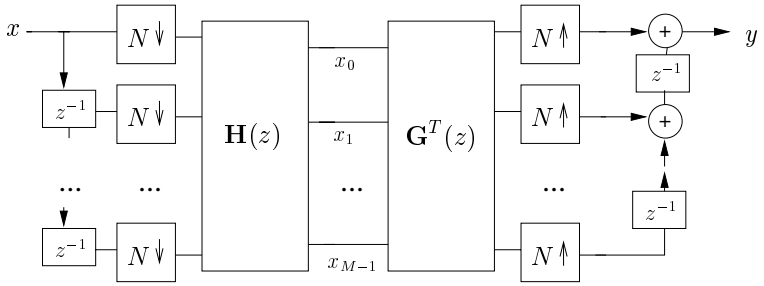

Figure 8: Oversampled subband system, version 1

If now $\mathbf{H}(z)$ is para-unitary, i.e.

$$\tilde{\mathbf{H}}(z)\mathbf{H}(z) = \mathbf{H}_*^T(z^{-1})\mathbf{H}(z) = I \tag{18}$$

then $\mathbf{G}^T(z)$ could be chosen to be $J\tilde{\mathbf{H}}(z)$. J is an anti-diagonal matrix. The anti-diagonal matrix causes the rows of $\mathbf{G}^T(z)$ to be mirrored. As a consequence of this the delay element structure at the right hand side of figure 8 undergoes the same mirror operation. This leads to figure 9.

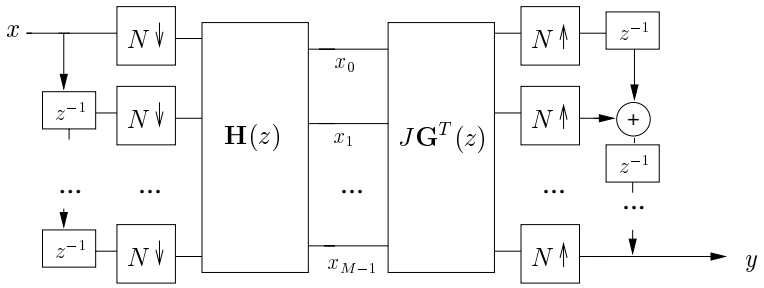

Figure 9: Oversampled subband system, version 2

As $J\mathbf{G}^T(z)\mathbf{H}(z) = JJ\tilde{\mathbf{H}}(z)\mathbf{H}(z) = I$, the subband system would reduce to figure 10, which can be proven to be equivalent to a delay operator.
The following then holds :

$$\mathbf{G}^T(z) = J\tilde{\mathbf{H}}(z) \tag{19}$$

$$\Leftrightarrow$$

$$G_{i_{j:N}}(z) = \left[\mathbf{G}(z)\right]_{ij} = \left[\mathbf{H}_*(z^{-1})\right]_{i(N-1-j)} \tag{20}$$

The z^{-1}-operator would lead to non-causal filters which are not realisable. Relaxing the losslessness condition to[4]

$$J\bar{\mathbf{G}}^T(z)\mathbf{H}(z) = z^{-(\lceil \frac{L_p}{N} \rceil - 1)} \tag{21}$$

[4] L_p is the length of the analysis and synthesis filters.

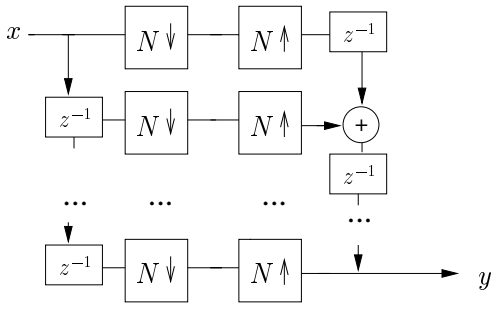

Figure 10: Perfect reconstruction subband system

leads to an implementable perfect reconstruction system with processing delay $N\lceil\frac{L_p}{N}\rceil$. The input-output delay will be $N\lceil\frac{L_p}{N}\rceil + N - 1$.
The synthesis filters are found to be time-reversed complex conjugated equivalents of the analysis filters. The frequency amplitude responses of corresponding analysis and synthesis filters are therefore identical.
In case of oversampled DFT modulated filter banks $\mathbf{H}(z)$ can be written as $\mathbf{FB}(z)$. Para-unitariness of $\mathbf{H}(z)$ apparently comes down to para-unitariness of $\sqrt{M}\mathbf{B}(z)$. Now,

$$\mathbf{G}^T(z) = J\tilde{\mathbf{H}}(z) = MJ\tilde{\mathbf{B}}(z)\mathbf{F}^{-1} \tag{22}$$

$$\bar{\mathbf{G}}^T(z) = Mz^{-(\lceil\frac{L_p}{N}\rceil-1)}J\tilde{\mathbf{B}}(z)\mathbf{F}^{-1} = MJ\tilde{\bar{\mathbf{B}}}(z)\mathbf{F}^{-1} \tag{23}$$

So

$$\bar{\mathbf{G}}(z) = \tilde{\mathbf{H}}^T(z)Jz^{-(\lceil\frac{L_p}{N}\rceil-1)} \tag{24}$$

This implies

$$\bar{G}_{i_{j:N}}(z) = \left[\bar{\mathbf{G}}(z)\right]_{ij} = z^{-(\lceil\frac{L_p}{N}\rceil-1)}\left[\mathbf{H}_*(z^{-1})\right]_{i(N-1-j)} = z^{-(\lceil\frac{L_p}{N}\rceil-1)}H^*_{i_{N-1-j:N}}(z^{-1}) \tag{25}$$

such that

$$\bar{G}_i(z) = \sum_{n=0}^{N-1} z^{-n}z^{-N(\lceil\frac{L_p}{N}\rceil-1)}H^*_{i_{N-1-n:N}}(z^{-N}) \tag{26}$$

$$= z^{-(N\lceil\frac{L_p}{N}\rceil-N+N-1)}\sum_{n=0}^{N-1} z^{N-1-n}H^*_{i_{N-1-n:N}}(z^{-N}) \tag{27}$$

$$= z^{-(N\lceil\frac{L_p}{N}\rceil-1)}H_i^*(z^{-1}) \tag{28}$$

The synthesis filters $\bar{g}_i(k)$ can be thus expressed as (if L_p is a multiple of N) :

$$\bar{g}_i(k) = \mathrm{conj}\left(h_i(L_p-1-k)\right) \tag{29}$$

$$= h_0(L_p-1-k)e^{j\frac{2\pi(L_p-1-k)i}{M}} \tag{30}$$

$$= e^{j\frac{2\pi(L_p-1)i}{M}}h_0(L_p-1-k)e^{-j\frac{2\pi ki}{M}} \tag{31}$$

The synthesis filters are a kind of DFT modulated equivalents of the synthesis prototype $\bar{g}_0(k) = h_0(L_p - 1 - k)$.
In a more general case, the synthesis bank is chosen independently of the analysis banks and is characterised by its own $\mathbf{B}(z)$, which will be referred to as $\mathbf{C}(z)$. A general setup for an oversampled DFT modulated subband scheme is shown in figure 11 :

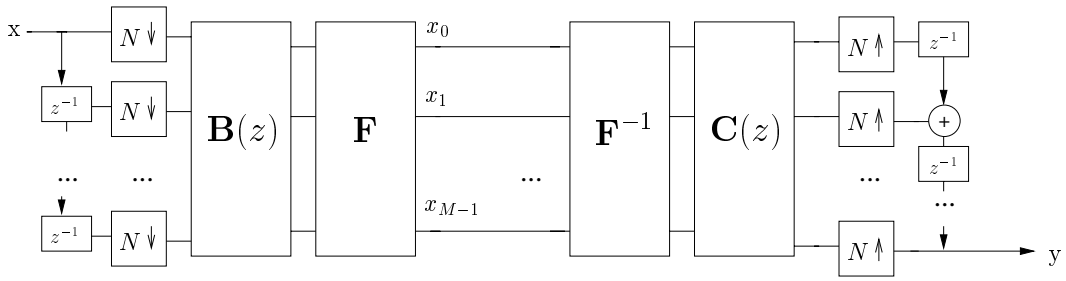

Figure 11: DFT modulated subband system

$\mathbf{G}^T(z)$ is now found to be :

$$\mathbf{G}^T(z) = J\mathbf{C}(z)\mathbf{F}^{-1} \tag{32}$$

The synthesis bank polyphase matrix $\mathbf{G}(z)$ then is

$$\mathbf{G}(z) = \frac{1}{M}\mathbf{F}^*\mathbf{C}^T(z)J \tag{33}$$

Para-unitarity then implies

$$\mathbf{C}(z)\mathbf{B}(z) = I \tag{34}$$

This condition preserves signal quality.

3.1.3 Imposing para-unitariness

$\mathbf{B}(z)$ is a structured matrix with non-zero entries forming a band pattern. Row or column permutations, corresponding to a left or right multiplication with a permutation matrix, do not affect the para-unitary character of $\mathbf{B}(z)$. After permutation a block diagonal matrix can be obtained having g dense blocks of dimension $\frac{M}{g} \times \frac{N}{g}$.
Only entries of $\mathbf{B}(z)$ with row coordinate i and column coordinate j satisfying $(i - j) \bmod g = 0$ can be non-zero. This implies that, for a given γ, all $\frac{MN}{g^2}$ non-zero entries on rows with row index i such that $\gamma = i \bmod g$ can be shifted towards each other by row and column operations. A dense $\frac{M}{g} \times \frac{N}{g}$ matrix is now obtained. For each $\gamma = 0 \rightarrow g-1$ a different sub-matrix is found. All $\frac{MN}{g}$ polyphase components are now contained in one of these sub-matrices. The sub-matrices are the block elements of an $M \times N$ block diagonal matrix. $\mathbf{B}(z)$ is then para-unitary if each sub-matrix is para-unitary on its own (see also Appendix B).
The sub-matrix corresponding to γ is the (full) $\mathbf{B}(z)$-matrix of a $\frac{M}{g}$-subband, $\frac{N}{g}$-fold downsampled filter bank. Its polyphase component numbers have been first multiplied with g

and then augmented with γ.
Consider the following example : $M = 6, N = 4$, so $g = 2$ and $K = 12$.

$$\mathbf{B}(z) = \begin{bmatrix} H_0(z^3) & 0 & z^{-1}H_6(z^3) & 0 \\ 0 & H_1(z^3) & 0 & z^{-1}H_7(z^3) \\ z^{-2}H_8(z^3) & 0 & H_2(z^3) & 0 \\ 0 & z^{-2}H_9(z^3) & 0 & H_3(z^3) \\ z^{-1}H_4(z^3) & 0 & z^{-2}H_{10}(z^3) & 0 \\ 0 & z^{-1}H_5(z^3) & 0 & z^{-2}H_{11}(z^3) \end{bmatrix}$$

By appropriate row and column operations the following matrix is obtained :

$$P\mathbf{B}(z)Q = \left[\begin{array}{cc|cc} H_0(z^3) & z^{-1}H_6(z^3) & 0 & 0 \\ z^{-2}H_8(z^3) & H_2(z^3) & 0 & 0 \\ z^{-1}H_4(z^3) & z^{-2}H_{10}(z^3) & 0 & 0 \\ \hline 0 & 0 & H_1(z^3) & z^{-1}H_7(z^3) \\ 0 & 0 & z^{-2}H_9(z^3) & H_3(z^3) \\ 0 & 0 & z^{-1}H_5(z^3) & z^{-2}H_{11}(z^3) \end{array}\right]$$

Compare the block diagonal elements with matrix $\mathbf{B}(z)$ corresponding to $M = 3, N = 2$:

$$\begin{bmatrix} H_0(z^3) & z^{-1}H_3(z^3) \\ z^{-2}H_4(z^3) & H_1(z^3) \\ z^{-1}H_2(z^3) & z^{-2}H_5(z^3) \end{bmatrix} \rightarrow \begin{bmatrix} H_0(z) & H_3(z) \\ z^{-1}H_4(z) & H_1(z) \\ H_2(z) & H_5(z) \end{bmatrix} \tag{35}$$

A further concern are the delays. All sub-matrices have the same delays. For the non-zero elements of $\mathbf{B}(z)$: $z^{-l}H_{0_{(k+lN):K}}(z^L)$, z^{-l} varies between 1 and z^{-L+1} whereas the polyphase filters are L-fold upsampled ever. It is therefore more efficient to optimise $H_{0_{(k+lN):K}}(z)$ instead of its upsampled form.
Put the delays l, corresponding to z^{-l}, in a delay-matrix as was done in figure 6. Increasing or decreasing a complete delay-matrix row or column with a constant λ will not change the para-unitary property. This corresponds to a left or right multiplication of $\mathbf{B}(z)$ with a diagonal para-unitary matrix. Consider the following procedure (see also Appendix C):

- decrease each column with l_k so to get a first row containing anything but zero delays
- augment each row with a constant delay such that the minimum delay on each row is zero

$$\Downarrow$$

- now, the delay matrix elements are all multiples of L ($= M$ if M and N are coprime)
- the para-unitariness of an arbitrary $\mathbf{B}(z)$ comes down to imposing para-unitariness to a set of sub-matrices containing (low-order) delays and (subsampled) prototype polyphase components $z^{-\beta}H_{0_{(k+lN):K}}(z)$

3.1.4 Para-unitary lattice structures

An $M \times M$ FIR causal and para-unitary matrix of degree N can be decomposed as [5] :

$$\mathbf{H}_N(z) = \mathbf{V}_N(z)\mathbf{V}_{N-1}(z)...\mathbf{V}_1(z)U \tag{36}$$

$\mathbf{V}_i(z)$ are degree-1 para-unitary building blocks :

$$\mathbf{V}_i(z) = I - v_i v_i^\dagger + z^{-1} v_i v_i^\dagger \tag{37}$$

U is a unitary matrix which on its turn can be decomposed as :

$$U = \sqrt{d} U_1 U_2 ... U_{M-1} D \tag{38}$$

$D = \mathrm{diag}(e^{j\theta_i})$, U_i are Householder matrices :

$$U_i = I - 2u_i u_i^\dagger \tag{39}$$

v_i and u_i are $M \times 1$ unit norm vectors. In this context the prototype filter is real, so $D = I$ and also $d = 1$.
The $M \times M$ unitary matrix U is characterised by $M - 1$ vectors u_i. Clearly, the unitary constraint imposes a restriction on the M^2 degrees of freedom a random $M \times M$ matrix disposes of. Therefore, the u_i's can have a special, more restricted form. When contained in a matrix $[u_1, u_2, ..., u_{M-1}]$, it can be proven (see [5]) that this matrix can have the following lower triangular form to lead to a consistent description :

$$\begin{bmatrix} u_1 & u_2 & \cdots & u_{M-1} \end{bmatrix} = \begin{bmatrix} u_1(1) & 0 & \cdots & 0 \\ u_1(2) & u_2(2) & \cdots & 0 \\ \vdots & \vdots & \ddots & \vdots \\ u_1(M-1) & u_2(M-1) & \cdots & u_{M-1}(M-1) \\ u_1(M) & u_2(M) & \cdots & u_{M-1}(M) \end{bmatrix} \tag{40}$$

The perfect reconstruction subband design leads to a set of rectangular (square in case of critical subsampling) para-unitary matrices. Each rectangular matrix will be embedded in a larger square matrix whose para-unitariness automatically implies the para-unitariness of a subset of its columns. These square matrices can have a parameter description as described above. An optimisation procedure playing around with the v_i's and u_i's should lead to a para-unitary filter set with good frequency selectivity.
The delays present in Eq. 35 only play a role when the optimal (v_i, u_i) parametrisation is transformed back into a set of para-unitary sub-matrices. After linking the matrix entries with the corresponding polyphase components a delay causes the polyphase component to be shifted into the anti-causal direction. The prototype will be a bit longer by this.
The polyphase filter length can be chosen freely and controls the order of the matrix decompositions (see Eq. 36). It is therefore related to the complexity of the optimisation problem and of course determines the prototype filter length. The different sub-matrices

contain polyphase filters covering a major part of the prototype filter time domain range. In general, all polyphase components will have the same length, restricting the prototype filter length to vary in steps of K, the least common multiple of M and N. This can be quite unattractive and restricts design freedom : for $M = 32$ and $N = 28, K = 224$.
Finding good starting values for v_i and u_i is not trivial. The optimisation time strongly depends on the quality of the initial values. Random initialisation will lead to satisfactory results after some trial rounds. Decomposing a well-chosen prototype filter in its v_i and u_i parameters will in general not be possible by lack of para-unitariness. However, a well-chosen prototype will be approximated by its "nearest" perfect reconstruction bank, mostly leading to good starting values.
The (v_i, u_i) description corresponding to a perfect reconstruction prototype can be found by the inverse decomposition corresponding to Eq. 36 and 38. It is based on singular value decomposition, pseudo-inverse and Householder factorisation (see Appendix D).
The previous is illustrated by means of an example. Again the $M = 6, N = 4$ case is considered. An 88 taps FIR prototype filter was found by optimisation. The results are shown in figure 12. The aliasing level introduced by a single filter bank is around -32 dB.

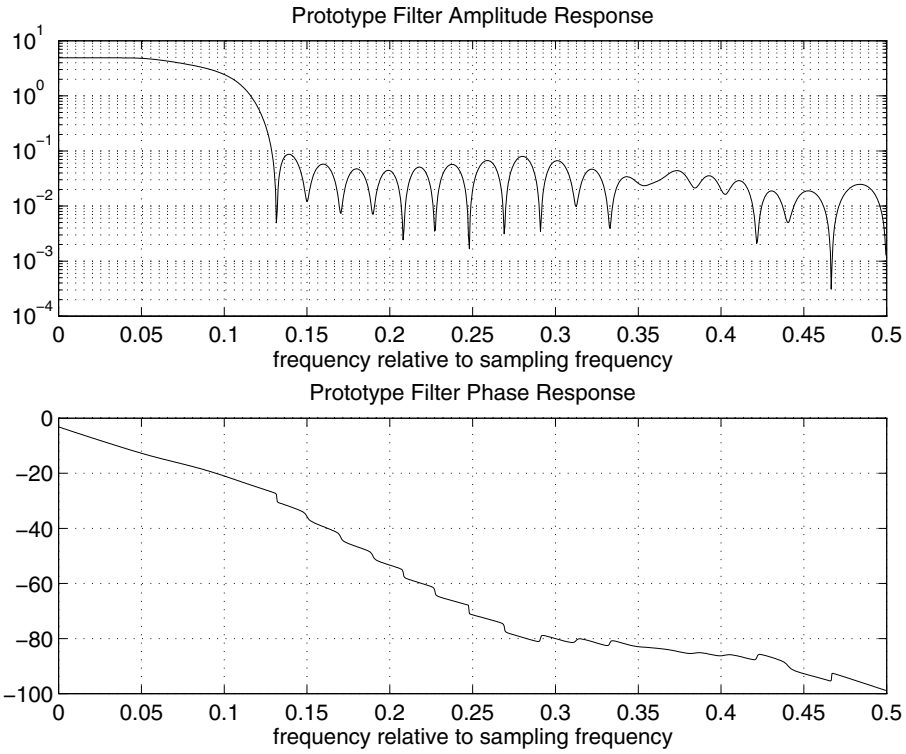

Figure 12: Perfect Reconstruction Oversampled Filter Bank : Prototype Characteristics

3.2 $M = 2N$

For the special case of $M = 2N$, i.e. with 2-fold subband oversampling, another parametrisation is feasible. If $M = 2N$, $\mathbf{B}(z)$ is a $2N \times N$ matrix :

$$\mathbf{B}(z) = \begin{bmatrix} H_0(z^2) & 0 & \cdots & 0 \\ 0 & H_1(z^2) & \cdots & 0 \\ \vdots & \vdots & \ddots & \vdots \\ 0 & 0 & \cdots & H_{N-1}(z^2) \\ z^{-1}H_N(z^2) & 0 & \cdots & 0 \\ 0 & z^{-1}H_{N+1}(z^2) & \cdots & 0 \\ \vdots & \vdots & \ddots & \vdots \\ 0 & 0 & \cdots & z^{-1}H_{M-1}(z^2) \end{bmatrix} \tag{41}$$

After appropriate permutation perfect reconstruction is guaranteed through para-unitariness of the following set :

$$\left\{ \begin{bmatrix} H_i(z) \\ H_{N+i}(z) \end{bmatrix} \right\}_{i=0 \to N-1} \tag{42}$$

These para-unitary conditions come down to a set of power complementary pairs as they are equivalent to :

$$\left\{ \tilde{H}_i(z)H_i(z) + \tilde{H}_{N+i}(z)H_{N+i}(z) = 1 \right\}_{i=0 \to N-1} \tag{43}$$

This power complementarity can be imposed by means of a 2-channel lossless lattice. A 2×1 Nth-order causal FIR lossless system with real coefficients can be factorised as (see [5]) :

$$\mathbf{H}_N(z) = \mathbf{R}_N \Lambda(z) \mathbf{R}_{N-1} \ldots \mathbf{R}_1 \Lambda(z) \begin{bmatrix} \cos\theta_0 \\ -\sin\theta_0 \end{bmatrix} \tag{44}$$

with Givens rotations $\mathbf{R}_i$:

$$\mathbf{R}_i = \begin{bmatrix} \cos\theta_i & \sin\theta_i \\ -\sin\theta_i & \cos\theta_i \end{bmatrix} \tag{45}$$

and a first order para-unitary $\Lambda(z)$:

$$\Lambda(z) = \begin{bmatrix} 1 & 0 \\ 0 & z^{-1} \end{bmatrix} \tag{46}$$

An optimisation procedure adapts the lattice rotation angles θ_i for all N power complementary pairs in order to obtain a prototype filter with good lowpass characteristics. The inverse parametrisation is explained in Appendix E. The same decomposition can be used for perfect reconstruction cosine modulated filter bank design.
A 100-taps, 8-channel perfect reconstruction filter bank was designed and is shown in figure 13. The aliasing level introduced by 1 filter bank is about -41 dB.

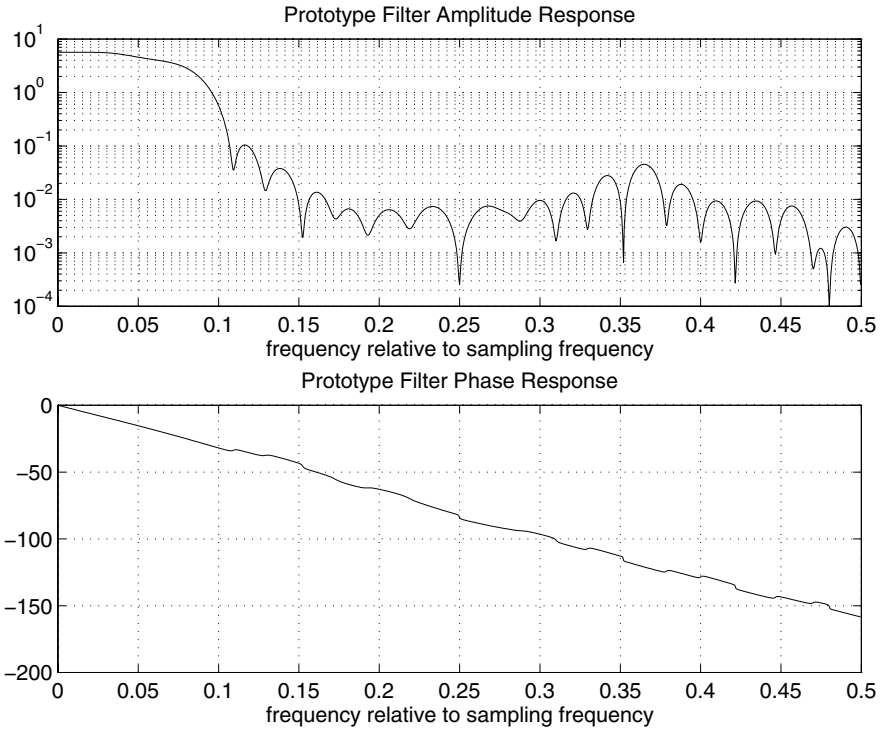

Figure 13: Perfect Reconstruction 2-fold Oversampled Filter Bank

4 Nearly Perfect Reconstruction DFT modulated Filter Banks

Perfect reconstruction is a noble but also a restrictive property. It ensures signals are passed through the subband system without any quality losses. This does not hold anymore when intermediate operations take place in between. Moreover perfect reconstruction is overruled by non-linearities (at the analog side), injected noise and algorithm imperfections (residual errors for instance in case of subband adaptive filtering). Perfect reconstruction can therefore be relaxed to 'nearly' perfect reconstruction by admitting some amplitude, phase and aliasing distortion as long as the distortion is not noticeable or is acceptably low. Perfect reconstruction filter banks typically have a non-negligible stopband suppression (see previous designs) and therefore nearly perfect reconstruction banks could lead to better perceptual results as better filter bank characteristics lead to approved convergence in case of subband adaptive filtering for instance.

4.1 Frequency-Domain Optimisation

Phase distortion in sound transmission is not detrimental as long as abrupt phase transitions are avoided. Small amplitude distortion will not cause significant perceptual quality

losses. A filter bank with better bandpass characteristics leads to decreased aliasing distortion and improved convergence in case of adaptive filtering. The prototype filter can be designed by optimising the lowpass characteristics and the overall amplitude distortion. Instead of the overall amplitude distortion only the distortion from neighbouring bands is minimised in practice.
An example can be found in figure 14 (compare it with figure 12 and 13) : 6 subbands, 4-fold downsampling, 88 taps prototype filters. The analysis and synthesis bank characteristics

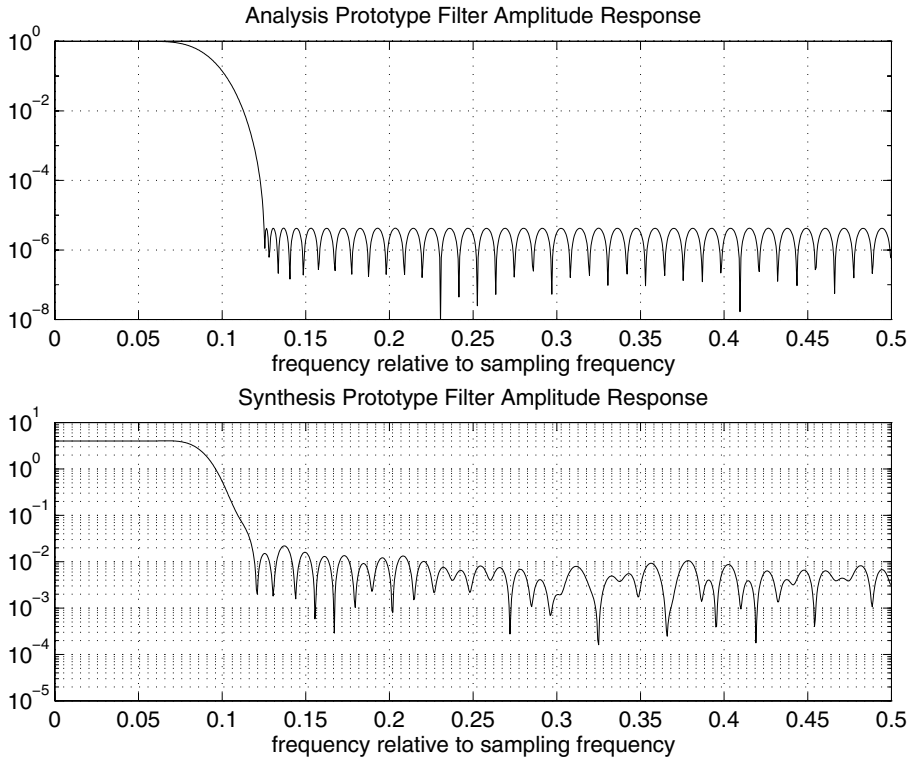

Figure 14: Nearly Perfect Reconstruction Oversampled Filter Bank : Prototype Characteristics

are different. The analysis prototype was designed with the Parks-McClellan exchange algorithm and has a uniform stopband suppression. The synthesis filter was optimised to obtain a subband system with a small amplitude distortion. The aliasing level introduced by the analysis bank is around -100 dB. The synthesis bank has a -44 dB aliasing level. The maximal amplitude distortion of the analysis-synthesis pair is 0.11 % at 0.25 Hz and the maximal phase distortion is 0.026° at 0.44 Hz. The perceptual distortion is sufficiently small.

4.2 Time-Domain Optimisation

Another approach leading to nearly perfect reconstruction systems relates the subband signals to the analysis bank input in time domain. A similar approach was found in [1]. The input signal $x(k)$ is put in an infinitely long vector X :

$$X = \begin{bmatrix} \vdots \\ x(k-1) \\ x(k) \\ x(k+1) \\ \vdots \end{bmatrix} \tag{47}$$

Relating it to the (downsampled) subband signals $x_i(n) = x_i(kN)$:

$$\begin{bmatrix} \vdots \\ x_{M-1}(n-1) \\ x_0(n) \\ \vdots \\ x_{M-1}(n) \\ x_0(n+1) \\ \vdots \end{bmatrix} = \begin{bmatrix} \ddots & & & & & & \\ & h_0(L_p-1) & \cdots & h_0(0) & & & \\ & h_1(L_p-1) & \cdots & h_1(0) & & & \\ & \vdots & \ddots & \vdots & & & \\ & h_{M-1}(L_p-1) & \cdots & h_{M-1}(0) & & & \\ & & h_0(L_p-1) & \cdots & \cdots & h_0(0) & \\ & & h_1(L_p-1) & \cdots & \cdots & h_1(0) & \\ & & \vdots & \ddots & \ddots & \vdots & \\ & & h_{M-1}(L_p-1) & \cdots & \cdots & h_{M-1}(0) & \\ & & & & & & \ddots \end{bmatrix} \begin{bmatrix} \vdots \\ x(k-1) \\ x(k) \\ x(k+1) \\ \vdots \end{bmatrix} \tag{48}$$

which can be written more compactly as

$$S = \bar{T}_H X. \tag{49}$$

Matrix $\bar{T}_H$ contains the analysis bank filters $h_0(k) \rightarrow h_{M-1}(k)$ and has a band diagonal structure. The dimensions of the different blocks are shown in figure 15.

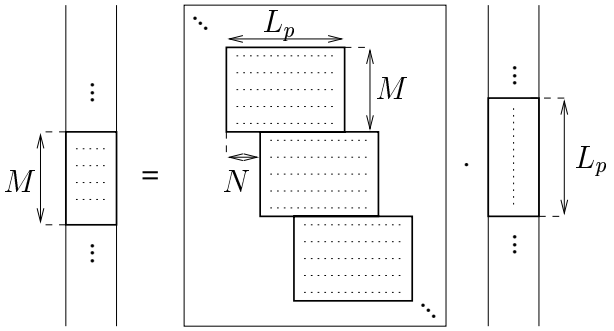

Figure 15: $S = \bar{T}_H X$

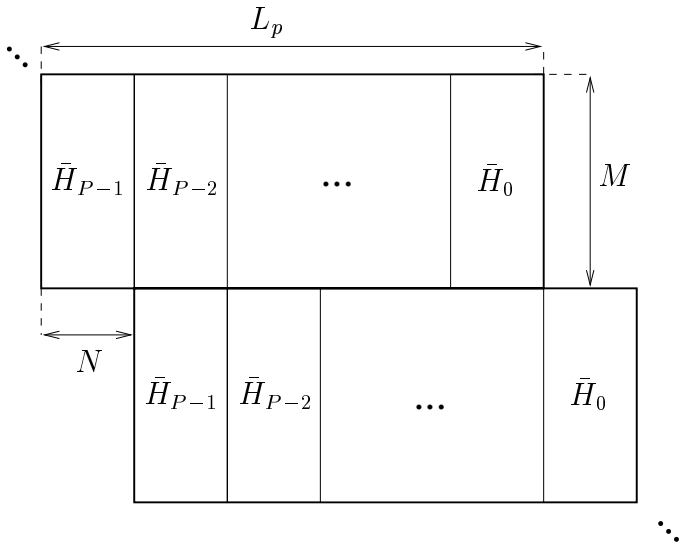

Figure 16: Block Partitioning

If $L_p = PN$, the analysis filters can be partitioned in P blocks as shown in figure 16.
The bars indicate that blocks appear in time-reversed order : $\bar{H}_p = H_p J$.
Similar expressions can be written down for the synthesis part (assuming the analysis and synthesis filter lengths are the same) :

$$\begin{bmatrix} \vdots \\ y(k-1) \\ y(k) \\ y(k+1) \\ \vdots \end{bmatrix} =$$

$$\begin{bmatrix} \ddots & & & & & & & & \\ & g_0(0) & \cdots & g_{M-1}(0) & & & & & \\ & g_0(1) & \cdots & g_{M-1}(1) & & & & & \\ & \vdots & \ddots & \vdots & g_0(0) & \cdots & g_{M-1}(0) & & \\ & \vdots & \ddots & \vdots & g_0(1) & \cdots & g_{M-1}(1) & & \\ & g_0(L_p-1) & \cdots & g_{M-1}(L_p-1) & \vdots & \ddots & \vdots & & \\ & & & & \vdots & \ddots & \vdots & & \\ & & & & g_0(L_p-1) & \cdots & g_{M-1}(L_p-1) & & \\ & & & & & & & \ddots & \end{bmatrix} \begin{bmatrix} \vdots \\ x_{M-1}(n-1) \\ x_0(n) \\ \vdots \\ x_{M-1}(n) \\ x_0(n+1) \\ \vdots \end{bmatrix} \tag{50}$$

shortly rewritten as

$$Y = T_G^T S \tag{51}$$

Partitioning in the same way leads to G_p^T-blocks (figure 17).

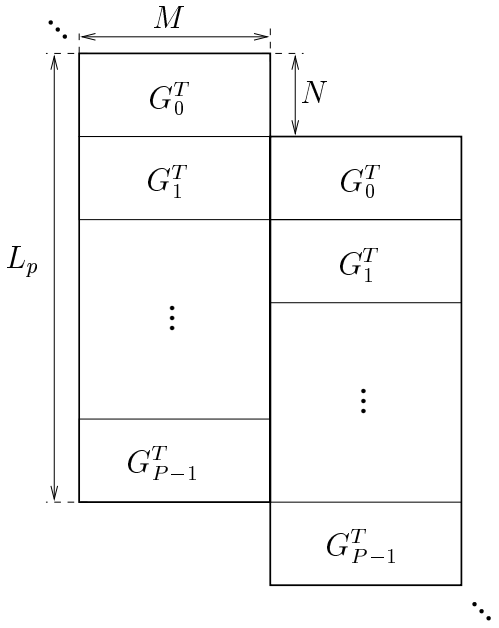

Figure 17: T_G^T

The reconstruction properties follow from the matrix product $T_G^T \bar{T}_H$. Taking in account the filter partitioning, this matrix product is determined by inter-block products, or more precisely by the block vector convolution of

$$V_q = \text{conv}\left(\left[\begin{array}{cccc} G_0^T & G_1^T & \cdots & G_{P-1}^T \end{array}\right], \left[\begin{array}{cccc} \bar{H}_0 & \bar{H}_1 & \cdots & \bar{H}_{P-1} \end{array}\right]\right) \tag{52}$$

i.e. (assuming $H_p = G_p = 0$, if $p < 0$ or $p \geqslant P$)

$$V_q = \sum_{p=0}^{P-1} G_{P-1-p}^T \bar{H}_{p+q} \tag{53}$$

Perfect reconstruction implies

$$V_0 = I \tag{54}$$

$$V_q = 0 \qquad q \neq 0 \tag{55}$$

In case of a para-unitary DFT modulated filter bank and $L_p = PN$,

$$h_i(k) = h_0(k) e^{-j\frac{2\pi ki}{M}} \tag{56}$$

$$\bar{g}_i(k) = \text{conj}(h_i(L_p - 1 - k)) = e^{j\frac{2\pi(L_p-1)i}{M}} h_0(L_p - 1 - k) e^{-j\frac{2\pi ki}{M}} \tag{57}$$

and

$$H_p = \begin{bmatrix} h_0(pN) & \cdots & h_0(pN+N-1) \\ \vdots & \ddots & \vdots \\ h_{M-1}(pN) & \cdots & h_{M-1}(pN+N-1) \end{bmatrix} \tag{58}$$

$$G_p = \bar{H}^*_{P-1-p} = H^*_{P-1-p} J \tag{59}$$

$$V_q = \sum_{p=0}^{P-1} G^T_{P-1-p} \bar{H}_{p+q} = \sum_{p=0}^{P-1} J H^{*T}_p H_{p+q} J \tag{60}$$

A subband system is perfectly reconstructing if its analysis polyphase component matrix $\mathbf{H}(z)$ is para-unitary (see Eq. 10 and 18) :

$$[\mathbf{H}(z)]_{ij} = \sum_{l=0}^{P-1} z^{-l} [\mathbf{H}_l]_{ij} = H_{i_{j:N}}(z) \tag{61}$$

in which $\mathbf{H}_l$ is a matrix containing the l-th order coefficients of $\mathbf{H}(z)$. Element (i,j) of $\mathbf{H}_l$ then is :

$$[\mathbf{H}_l]_{ij} = h_i(j+lN) \tag{62}$$

Now, $\mathbf{H}_p$ corresponds to H_p as defined in Eq. 58. So,

$$\mathbf{H}(z) = \sum_{l=0}^{P-1} z^{-l} H_l \tag{63}$$

$\tilde{\mathbf{H}}(z)\mathbf{H}(z) = I$ implies

$$(H^{*T}_0 + zH^{*T}_1 + \ldots + z^{P-1} H^{*T}_{P-1})(H_0 + z^{-1} H_1 + \ldots + z^{-(P-1)} H_{P-1}) = I \tag{64}$$

This is equivalent to

$$\sum_{p=0}^{P-1} H^{*T}_p H_p = I \qquad \text{term corresponding to } z^0 \tag{65}$$

$$\sum_{p=0}^{P-1} H^{*T}_p H_{p+q} = 0 \qquad \text{terms corresponding to } z^{-q} \tag{66}$$

This is in accordance with Eq. 54, 55 and 60.
A filter bank can be designed that optimally meets conditions 54 and 55. A trade-off between these conditions and selective filter characteristics should lead to a nearly perfect reconstruction subband system. Optimisation using this approach seems to be quite computationally demanding however.
The following illustrates the previous theoretical exposition. Figure 18 (compare it with

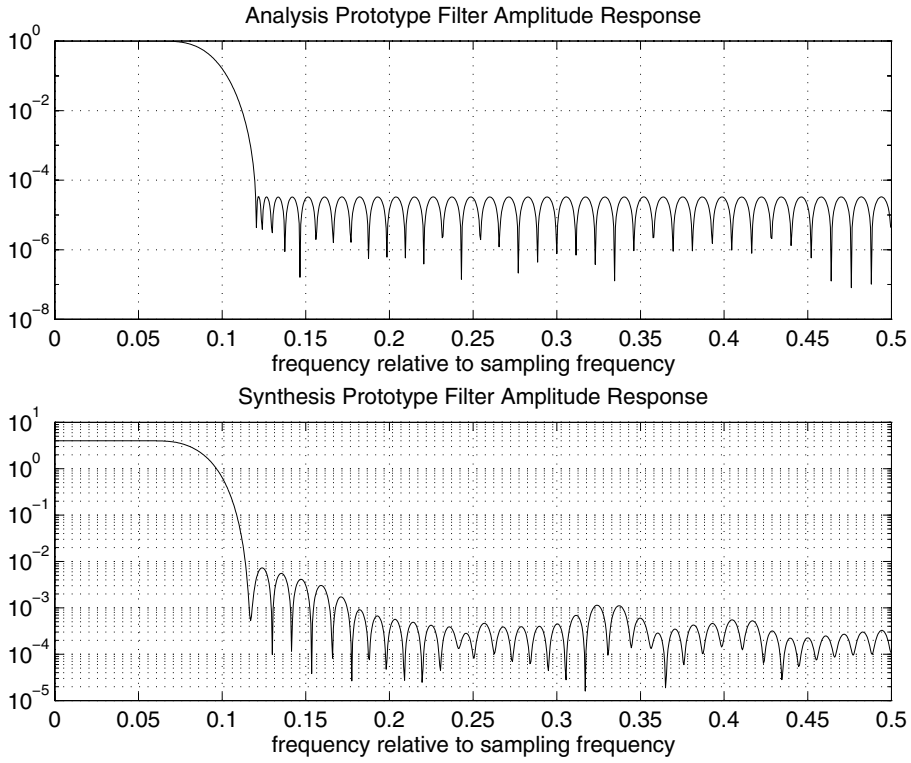

Figure 18: Nearly Perfect Reconstruction Oversampled Filter Bank : Prototype Characteristics

figure 12, 13 and 14) shows again 6 subbands, 4-fold downsampled, 88 taps subband prototype filters. Here also, the analysis prototype was designed with the Parks-McClellan exchange algorithm. The aliasing level introduced by the analysis bank is around -81 dB. The synthesis bank has a -63 dB aliasing level. The maximal amplitude distortion of the analysis-synthesis pair is 0.077 % at 0.25 Hz and the maximal phase distortion is 0.001° at 0.34 Hz. The perceptual distortion is sufficiently small.

5 Conclusions

Most oversampled subband schemes are based on DFT modulated filter banks for their aliasing robustness and ease of implementation. M subband filters are derived by frequency shifting a well-designed prototype lowpass filter $h_0(k)$. DFT modulated filter banks lead to an efficient implementation by using polyphase decomposition and fast signal transforms. A DFT modulated filter bank with N-fold downsampling can be implemented as a tapped delay line of size N followed by an $M \times N$-matrix $\mathbf{B}(z)$, containing polyphase components of the prototype $h_0(k)$, and an $M \times M$-DFT matrix $\mathbf{F}$ (see figure 11). At the right hand side the inverse operations take place.

$\mathbf{B}(z)$ is a structured matrix whose non-zero entries are polyphase components of the analysis prototype filter $h_0(k)$. Ideally, signal y at the output of the subband scheme should be an exact (delayed) version of the input x. A DFT modulated analysis/synthesis filter bank set is therefore designed such that the following conditions are met :

- the (analysis) filters are frequency selective. This prevents inserting too much inter-subband aliasing caused by the downsampling operation. Inter-subband aliasing has a negative impact on possible intermediate operations performed on the subband signals (in case of subband adaptive filtering for instance).
- the analysis/synthesis filter bank set is (nearly) perfectly reconstructing. A condition ensuring perfect reconstruction is

$$\mathbf{C}(z)\mathbf{B}(z) = I \tag{67}$$

If $\mathbf{C}(z)$ is chosen to be the paraconjugate of a para-unitary $\mathbf{B}(z)$ (i.e. $\tilde{\mathbf{B}}(z)\mathbf{B}(z) = \mathbf{B}_*^T(z^{-1})\mathbf{B}(z) = I$), a perfect reconstruction subband system can be obtained.
By row and column permutations $\mathbf{B}(z)$ can be transformed into a block diagonal matrix. Now the para-unitariness of an arbitrary $\mathbf{B}(z)$ comes down to imposing para-unitariness on each of these blocks, which contain (low-order) delays and (subsampled) prototype polyphase components. Each of these rectangular blocks can be embedded in a larger square matrix whose para-unitariness automatically implies the para-unitariness of a subset of its columns. Square matrices can be parametrised to be perfectly reconstructing. An optimisation procedure playing around with the parameters allows to obtain a para-unitary filter bank set with good frequency selectivity.
Perfect reconstruction is a noble but also a restrictive property. It ensures that signals are passed through the subband system without any quality losses. Quite often the effect of perfect reconstruction is overruled by non-linearities (at the analog side), injected noise and algorithm imperfection (residual errors in echo cancellation for instance). Perfect reconstruction can therefore be relaxed to 'nearly' perfect reconstruction by admitting some amplitude, phase and aliasing distortion, as long as the distortion is not noticeable or is acceptably low. Both a frequency-domain and a time-domain based optimisation procedure were given to design nearly perfectly reconstructing subband systems.

6 Acknowledgements

Marc Moonen is a Research Associate with the F.W.O. Vlaanderen (Flemish Fund for Science and Research). This research was carried out at the ESAT laboratory of the Katholieke Universiteit Leuven and was partly funded by the Concerted Research Action MIPS (Model-based Information Processing Systems) and F.W.O. project nr. G.0295.97 of the Flemish Government, and the Interuniversity Attraction Pole (IUAP-nr.02) initiated by the Belgian State, Prime Minister's Office for Science, Technology and Culture. The scientific responsibility is assumed by its authors.

References

[1] A. Akansu and M. Smith. *Subband and Wavelet Transforms*. Kluwer Academic Publishers, Boston, 1995.

[2] H. Bölcskei, F. Hlawatsch, and H. Feichtinger. Oversampled FIR and IIR DFT Filter Banks and Weyl-Heisenberg Frames. In *Proceedings of the 1996 IEEE Int. Conf. on Acoust., Speech and Signal Processing*, Atlanta, Georgia, USA, May 1996.

[3] Z. Cvetković. Oversampled Modulated Filter Banks and Tight Gabor Frames in $l^2(\mathbb{Z})$. In *Proceedings of the 1995 IEEE Int. Conf. on Acoust., Speech and Signal Processing*, pages 1456–1459, Detroit, Michigan, USA, May 1995.

[4] K. Kajita, H. Kobayashi, S. Muramatsu, A. Yamada, and H. Kiya. A Design Method for Oversampled Paraunitary DFT Filter Banks using Householder Factorization. In *Proceedings of the European Signal Processing Conference (EUSIPCO-96)*, pages 192–195, Trieste, Italy, September 1996.

[5] P. Vaidyanathan. *Multirate Systems and Filter Banks*. Prentice Hall, Englewood Cliffs, New Jersey, USA, 1993.

[6] P. Vaidyanathan and Z. Doğanata. The Role of Lossless Systems in Modern Digital Signal Processing : A Tutorial. *IEEE Trans. Education*, 32(3):181–197, August 1989.

[7] M. Vetterli and Z. Cvetković. Oversampled FIR Filter Banks and Frames in $l^2(\mathbb{Z})$. In *Proceedings of the 1996 IEEE Int. Conf. on Acoust., Speech and Signal Processing*, pages 1530–1533, Atlanta, Georgia, USA, May 1996.

[8] M. Vetterli and D. Le Gall. Perfect Reconstruction FIR Filter Banks: Some Properties and Factorizations. *IEEE Trans. Acoust., Speech and Signal Processing*, 37(7):1057–1071, July 1989.

[9] X.-G. Xia and B. Suter. FIR Paraunitary Filter Banks Given Several Analysis Filters: Factorizations and Constructions. *IEEE Trans. Signal Processing*, 44(3):720–723, March 1996.

A Properties of $\mathbf{B}(z)$

$\mathbf{H}(z)$ can be factorised as $\mathbf{H}(z) = \mathbf{F}\mathbf{B}(z)$, with $\mathbf{F}$ an $M \times M$ DFT-matrix and $\mathbf{B}(z)$ defined as (Eq. 14 is repeated here) :

$$B_{ik}(z) = \frac{1}{M} \sum_{l=0}^{L-1} z^{-l} H_{0_{(k+lN):K}}(z^L) \sum_{m=0}^{M-1} e^{-j\frac{2\pi m(k+lN-i)}{M}} \tag{68}$$

We now analyse $\mathbf{B}(z)$ [5] :

- there is at most one value of l (see Eq. 68) smaller than L for which $\sum_{m=0}^{M-1} e^{-j\frac{2\pi m(k+lN-i)}{M}}$ differs from 0. In general we can state that

$$\sum_{m=0}^{M-1} e^{-j\frac{2\pi mn}{M}} = M \qquad \text{for } n = pM, p \in \mathbb{Z} \tag{69}$$

  And as it is a geometric series,

$$\sum_{m=0}^{M-1} e^{-j\frac{2\pi mn}{M}} = 0 \qquad \text{for } n \neq pM, p \in \mathbb{Z} \tag{70}$$

  So, we are actually looking for a value of l such that $(k+lN)$ mod M equals i. There must be an integer p for which

$$k + lN = i + pM \qquad l, p \in \mathbb{N}, l < L \tag{71}$$

  p should be smaller than J because $k + lN < LN = K = JM$.
  Suppose g is the greatest common divisor of M and N, then $N = \nu g$ and $M = \mu g$, with ν and μ coprime. As K is the least common multiple of M and N, $K = \frac{MN}{g}$. This also implies that $J = \frac{N}{g} = \nu$ and $L = \frac{M}{g} = \mu$ and as we know from the definition of ν and μ, J and L are coprime.
  There is clearly at most one value of l and k for which $\sum_{m=0}^{M-1} e^{-j\frac{2\pi m(k+lN-i)}{M}} \neq 0$. Suppose there are two :

$$\begin{array}{ccc} k + l_1N = i + p_1M & \text{and} & k + l_2N = i + p_2M \\ & \Downarrow & \\ & (l_1 - l_2)N = (p_1 - p_2)M & \end{array}$$

  dividing by g :

$$(l_1 - l_2)J = (p_1 - p_2)L$$

[5] Suppose K is the least common multiple of M and N, so $K = JM = LN$ and J and L are coprime.

as J and L are coprime,

$$l_1 = l_2 + sL \qquad \text{and} \qquad p_1 = p_2 + tJ, \qquad (s, t \in \mathbb{Z})$$

As $0 \leqslant l_{1/2} < L$ and $0 \leqslant p_{1/2} < J$, this can only hold for $s = t = 0$. So there can only be one unique couple (l, p) relating $k + lN$ and $i + pM$. Equation 68 then reduces to

$$B_{ik}(z) = z^{-l} H_{0_{(k+lN):K}}(z^L) \qquad (k + lN) \bmod M = i \tag{72}$$

Each non-zero entry contains a delay element z^{-l} and an upsampled, K-th order polyphase component of the prototype filter $h_0(k)$.

- $B_{ik}(z) \neq 0 \Rightarrow (i - k) \bmod g = 0$:
  find l and k such that $k + lN = i + pM$

$$\begin{gathered} k + l\nu g = i + p\mu g \\ \Downarrow \\ i - k = (l\nu - p\mu)g \end{gathered}$$

  So, $(i - k)$ must be divisible by g in order to have a non-zero entry in $\mathbf{B}(z)$.

- the n-th (out of K) polyphase component is located at position (i, k), with $i = n \bmod M$ and $k = n \bmod N$. This stems from the fact that $n = i + pM = k + lN$. Every n can be decomposed in an integer part and remainder modulo M or N. There exists at most one couple (i, k) for each polyphase component n (see before) and as the decomposition $n = i + pM = k + lN$ is unambiguous for $n < K$, each polyphase filter has its unique (i, k). All K polyphase filters are located at different places. $\mathbf{B}(z)$ has MN entries of which only $\frac{MN}{g}$ can be non-zero, all entries for which $i - k$ is divisible by g will have a contribution of just one polyphase component.

- $\mathbf{B}(z)$ is a structured matrix in which in each row and each column, $g - 1$ zero entries alternate with a non-zero one.
  $\mathbf{B}(z)$ can be thought of as a set of overlayed $M \times N$-submatrices of a diagonal $K \times K$-matrix. The polyphase contributions appear as diagonals in $\mathbf{B}(z)$ (see figure 5).

B Para-unitariness of $\mathbf{B}(z)$

For each entry of $\mathbf{B}(z)$ we can write (Equation 16), using the fact that $i - k = \alpha g$ and decomposing k as $\gamma + g\kappa$:

$$\begin{aligned} B_{ik}(z) &= z^{-l} H_{0_{(k+l\nu g):K}}(z^L) && k + l\nu g = i + p\mu g && (73) \\ &= z^{-l} H_{0_{(\gamma+g\kappa+l\nu g):K}}(z^L) && \gamma + g\kappa + l\nu g = \gamma + g(\kappa + \alpha) + p\mu g && (74) \end{aligned}$$

All non-zero entry coordinates having the same value for γ, i.e. the remainder class (with respect to g) their column coordinate belongs to is the same, can be shifted towards each other by appropriate column swapping. Consider the case for $\gamma = 0$ ($K = \mu\nu g, L = \mu, \kappa + \alpha = \iota$) :

$$z^{-l} H_{0_{(g\kappa+l\nu g):\mu\nu g}}(z^{\mu}) \qquad \kappa + l\nu = \iota + p\mu \tag{75}$$

Element (i,k) of $\mathbf{B}(z)$ therefore becomes the (ι,κ)-th element of an $\frac{MN}{g^2}$-element sub-matrix whose entries run through all values of (ι,κ). The submatrix with $\gamma = 0$ can therefore be regarded as the (full) $\mathbf{B}(z)$-matrix of a μ-subband, ν-fold downsampled filter bank in which the polyphase component numbers have been multiplied with g. As $g\,(\kappa + l\nu, \iota + p\mu) \leqslant (N - g, M - g)$, sub-matrices with $\gamma \neq 0$ will have the same structure, the same delays as with $\gamma = 0$. The polyphase component numbers however are augmented with γ.

C Delay compensation

Consider the following procedure which is applicable to the full sub-matrices containing the delays[6] :

- decrease each column with l_k so to get a first row containing anything but zero delays. Referring to Eq. 16, for each column k this comes down to looking for l_k and p_k such that $k + l_k N = p_k M$. For each row i we have l and p such that $k + lN = i + pM$. Combining this leads to $(l - l_k)N = i + (p - p_k)M$. The same procedure holds for any other column $\bar{k}$ on the same row : $(\bar{l} - \bar{l_k})N = i + (\bar{p} - \bar{p_k})M$. The delay $\Delta l = l - l_k$ now corresponding to (i,k) equals $\frac{i+(p-p_k)M}{N}$. In the same way, $\Delta\bar{l}$ is defined.

- find a delay constant for each row such that the minimum delay on each row is zero.

$$\Downarrow$$

- now, the delay matrix elements are all multiples of L ($= M$ if M and N are coprime). Compare Δl with $\Delta\bar{l}$: $\Delta l - \Delta\bar{l} = \frac{(p-p_k-\bar{p}+\bar{p_k})M}{N}$. As M and N are coprime, $p - p_k - \bar{p} + \bar{p_k}$ is divisible by N and therefore $\Delta\bar{l} - \Delta\bar{l}$ is a multiple of M. So by subtracting each row by its smallest Δl, all non-zero delays will be a multiple of L ($= M$ here).

- the para-unitariness of a random $\mathbf{B}(z)$ now comes down to imposing para-unitariness to a set of sub-matrices containing (low-order) delays and (subsampled) prototype polyphase components $z^{-\beta} H_{0_{(k+lN):K}}(z)$

[6] We assume the submatrices have dimension $M \times N$ and as they are full, M and N are coprime.

D Inverse decomposition for $M > N$

Whereas in the decomposition problem (Eq. 36) $\mathbf{H}_N(z)$ is parametrised such that the underlying filter bank is para-unitary, inverse decomposition deals with finding the unit-norm vectors v_i and u_i such that equation 36 is met. Given a para-unitary filter bank, the polyphase components can be easily derived from the prototype filter and put into the sub-matrices $\bar{\mathbf{H}}_N(z)$. Now as $M > N$ the para-unitary submatrices are rectangular and are embedded in a larger square matrix $\mathbf{H}_N(z)$. We repeat formula 36 :[7]

$$\mathbf{H}_N(z) = \mathbf{V}_N(z)\mathbf{V}_{N-1}(z)...\mathbf{V}_1(z)U \tag{76}$$

So

$$\bar{\mathbf{H}}_N(z) = \mathbf{V}_N(z)\mathbf{V}_{N-1}(z)...\mathbf{V}_1(z)\bar{U} \tag{77}$$

Introducing $\bar{\mathbf{H}}_{N-1}(z)$:

$$\bar{\mathbf{H}}_{N-1}(z) = \mathbf{V}_{N-1}(z)...\mathbf{V}_1(z)\bar{U} \tag{78}$$

$$\bar{\mathbf{H}}_N(z) = \mathbf{V}_N(z)\bar{\mathbf{H}}_{N-1}(z) \tag{79}$$

The z^{-N}-part of $\bar{\mathbf{H}}_N(z)$ is

$$v_N v_N^\dagger . \left(z^{-(N-1)}\text{-part of } \bar{\mathbf{H}}_{N-1}(z)\right) \tag{80}$$

and hence it is a rank-1 matrix. v_N can therefore be found as the first left singular vector of the z^{-N}-part of $\bar{\mathbf{H}}_N(z)$. The next step will be the recovery of $\bar{\mathbf{H}}_{N-1}(z)$.
Consider the general case where v_i and $\bar{\mathbf{H}}_i(z)$ are known and $\bar{\mathbf{H}}_{i-1}(z)$ needs to be found. Define $A_i = I - v_i v_i^\dagger$ and $B_i = v_i v_i^\dagger$.

$$\bar{\mathbf{H}}_i(z) = (A_i + z^{-1}B_i)\bar{\mathbf{H}}_{i-1}(z) \tag{81}$$

$$\sum_{k=0}^{i} \bar{H}_{i_k} z^{-k} = (A_i + z^{-1}B_i)\sum_{k=0}^{i-1} \bar{H}_{i-1_k} z^{-k} \tag{82}$$

and $\bar{H}_{i_k} = 0$ if $k < 0$ or $k > i$, so

$$\bar{H}_{i_k} = A_i \bar{H}_{i-1_k} + B_i \bar{H}_{i-1_{k-1}} \qquad \forall k \tag{83}$$

This leads to the following matrix equation :

$$\begin{bmatrix} \bar{H}_{i_0} \\ \bar{H}_{i_1} \\ \vdots \\ \bar{H}_{i_{i-1}} \\ \bar{H}_{i_i} \end{bmatrix} = \begin{bmatrix} A_i & 0 & \cdots & 0 \\ B_i & A_i & \cdots & 0 \\ \vdots & \vdots & \ddots & \vdots \\ 0 & 0 & \cdots & A_i \\ 0 & 0 & \cdots & B_i \end{bmatrix} \begin{bmatrix} \bar{H}_{i-1_0} \\ \bar{H}_{i-1_1} \\ \vdots \\ \bar{H}_{i-1_{i-1}} \end{bmatrix} \tag{84}$$

[7] $\mathbf{V}_i(z)$ are degree-1 para-unitary building blocks : $\mathbf{V}_i(z) = I - v_i v_i^\dagger + z^{-1} v_i v_i^\dagger$, U is a unitary matrix which on its turn can be decomposed as $U = \sqrt{d}U_1 U_2 ... U_{M-1} D$, $D = \text{diag}(e^{j\theta_i})$ and U_i are Householder matrices : $U_i = I - 2u_i u_i^\dagger$. v_i and u_i are $M \times 1$ column vectors having unit norm.

$\bar{\mathbf{H}}_{i-1}(z)$ can then be found based on $\bar{\mathbf{H}}_i(z)$ and the pseudo-inverse of the double diagonal matrix in the previous equation. v_{i-1} is again found as the first left singular vector of the $z^{-(i-1)}$-part of $\bar{\mathbf{H}}_{i-1}(z)$. The procedure can be repeated until a zero-order $\bar{\mathbf{H}}_0(z)$ remains. This matrix is rectangular and the unitary matrix U needed for the u_i's is a larger square matrix. A QR-decomposition of $\bar{\mathbf{H}}_0(z)$ offers a set of column vectors orthogonal to $\bar{\mathbf{H}}_0(z)$ such that $\bar{\mathbf{H}}_0(z)$ can be extended to the unitary U it is embedded in. The decomposition of U is based on its Householder factorisation :

$$U = U_1 U_2 ... U_{M-1} D \tag{85}$$

It can be proven (see [5]) that :

$$U_1 U = (I - 2u_1 u_1^\dagger)U = \begin{bmatrix} 1 & 0 \\ 0 & T \end{bmatrix}, \qquad T^\dagger T = I \tag{86}$$

So, with $U|_1$ the first column of U :

$$-2u_1 u_1^\dagger U|_1 = \begin{bmatrix} 1 \\ 0 \end{bmatrix} - U|_1 \tag{87}$$

Normalising both sides :

$$\frac{-2u_1 u_1^\dagger U|_1}{\sqrt{4U|_1^\dagger u_1 u_1^\dagger u_1 u_1^\dagger U|_1}} = \frac{\begin{bmatrix} 1 \\ 0 \end{bmatrix} - U|_1}{|| \begin{bmatrix} 1 \\ 0 \end{bmatrix} - U|_1 ||} \tag{88}$$

$$u_1 = \frac{\begin{bmatrix} 1 \\ 0 \end{bmatrix} - U|_1}{|| \begin{bmatrix} 1 \\ 0 \end{bmatrix} - U|_1 ||} \tag{89}$$

A similar decomposition of T will offer u_2 and so on.

E Inverse decomposition for $M = 2N$

Rewrite the decomposition using $\mathbf{H}_{N-1}(z)$:[8]

$$\mathbf{H}_N(z) = \mathbf{R}_N \Lambda(z) \mathbf{H}_{N-1}(z) \tag{90}$$

Call

$$\mathbf{H}_i(z) = \begin{bmatrix} H_i(z) \\ G_i(z) \end{bmatrix} \tag{91}$$

[8] with the Givens rotations $\mathbf{R}_i = \begin{bmatrix} \cos\theta_i & \sin\theta_i \\ -\sin\theta_i & \cos\theta_i \end{bmatrix}$ and $\Lambda(z) = \begin{bmatrix} 1 & 0 \\ 0 & z^{-1} \end{bmatrix}$

So,

$$H_{i+1}(z) = H_i(z)\cos\theta_i + z^{-1}G_i(z)\sin\theta_i \quad (92)$$
$$G_{i+1}(z) = -H_i(z)\sin\theta_i + z^{-1}G_i(z)\cos\theta_i \quad (93)$$

and by inversion

$$H_i(z) = H_{i+1}(z)\cos\theta_i - G_{i+1}(z)\sin\theta_i \quad (94)$$
$$z^{-1}G_i(z) = H_{i+1}(z)\sin\theta_i + G_{i+1}(z)\cos\theta_i \quad (95)$$

Lower order components are thus easily deduced from higher order ones, provided θ_i is known. The order of $H_i(z)$ is i, so the term corresponding to $z^{-(i+1)}$ must cancel in $H_{i+1}(z)\cos\theta_i - G_{i+1}(z)\sin\theta_i$. This leads to a formula for θ_i :

$$\theta_i = \mathrm{atan}\frac{h_{i+1}(i+1)}{g_{i+1}(i+1)} \quad (96)$$