**Katholieke Universiteit Leuven**

Departement Elektrotechniek ESAT-SISTA/TR 1998-17

# DFT Modulated Filter Bank Design for Oversampled Subband Systems [1]

Koen Eneman, Marc Moonen [2]

March 1998
Published in the Proceedings of the IEEE Benelux Signal Processing Symposium,
Leuven, Belgium, March 26-27, 1998

[1]This report is available by anonymous ftp from *ftp.esat.kuleuven.ac.be* in the directory *pub/SISTA/eneman/reports/98-17.ps.gz*

[2]ESAT (SISTA) - Katholieke Universiteit Leuven, Kardinaal Mercierlaan 94, 3001 Leuven (Heverlee), Belgium, Tel. 32/16/321809, Fax 32/16/321970, WWW: *http://www.esat.kuleuven.ac.be/sista*. E-mail: *koen.eneman@esat.kuleuven.ac.be* Marc Moonen is a Research Associate with the F.W.O. Vlaanderen (Flemish Fund for Science and Research). This research was carried out at the ESAT laboratory of the Katholieke Universiteit Leuven and was partly funded by the Concerted Research Action MIPS (Model-based Information Processing Systems) and F.W.O. project nr. G.0295.97 of the Flemish Government, and the Interuniversity Attraction Pole (IUAP-nr.02) initiated by the Belgian State, Prime Minister's Office for Science, Technology and Culture. The scientific responsibility is assumed by its authors.

# DFT Modulated Filter Bank Design for Oversampled Subband Systems

*Koen Eneman* *Marc Moonen*

Department of Electrical Engineering ESAT
Katholieke Universiteit Leuven
Kardinaal Mercierlaan 94, 3001 Heverlee - Belgium

tel. +32/16321809 +32/16321060
fax. +32/16321970
email: koen.eneman@esat.kuleuven.ac.be marc.moonen@esat.kuleuven.ac.be

**Abstract**

Filter banks are often used in digital signal processing. Subband splitting is a powerful technique to reduce the implementation cost and to improve algorithmic performance. DFT modulated filter banks are commonly used to design oversampled subband schemes. Ideally, the overall effect of a subband system is that of a pure delay, i.e. the subband system is perfectly reconstructing. In this paper we present a design technique for perfect and nearly perfect reconstruction oversampled DFT modulated filter banks.

## 1 INTRODUCTION

Digital filter banks are widely used in digital signal processing. Typical applications are subband adaptive filtering, subband coding or more generally, frequency-dependent signal processing. Subband splitting is a powerful technique to improve the performance of standard algorithms for wideband signals such as speech, audio and images. Furthermore, the combination of filter banks with multirate techniques leads to a reduced implementation cost. A general subband scheme is shown in figure 1. The

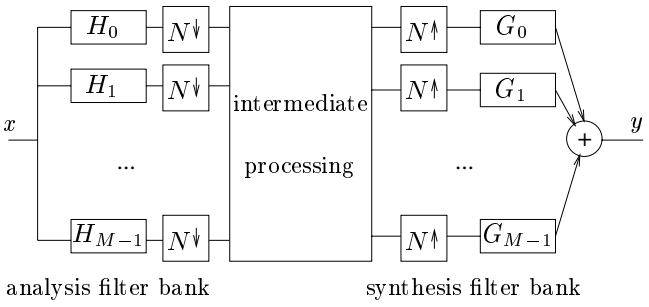


Figure 1: General subband scheme

analysis filter bank splits the input signal $x$ in $M$ subbands which are $N$-fold downsampled. Intermediate operations such as coding or adaptive filtering are then performed on the subbands at the downsampled rate. A recombination operation takes place in the synthesis filter bank which operates on the upsampled subband channels. The implementation cost can be optimally reduced when the subbands are maximally decimated (i.e. when $M = N$), but these critically downsampled subband systems tend to suffer from inter-band aliasing. From this point of view oversampled subband schemes ($M > N$) are more attractive as they trade off between complexity reduction and aliasing errors.
Ideally, the overall effect of a subband system is equivalent to a pure delay, i.e. the subband system is perfectly reconstructing. Perfect reconstruction design for critically downsampled DFT modulated filter banks is well-known. It leads to the design of para-unitary or unimodular polyphase matrices. For further information we refer to [4][6][7]. Perfect reconstruction design for oversampled DFT modulated filter banks is less known and some references can be found in more recent publications such as [1][3][5]. In this paper a design technique for perfect and nearly perfect reconstruction oversampled DFT modulated filter banks will be presented.

## 2 DFT MODULATED FILTER BANKS

Oversampled subband schemes are often based on DFT modulated filter banks for their aliasing robustness and ease of implementation. $M$ subband filters are derived by frequency shifting a well-designed prototype lowpass filter $h_0[k]$ :

$$h_i[k] = h_0[k]e^{-j\frac{2\pi ki}{M}}, \qquad i = 0 \rightarrow M-1 \quad (1)$$

DFT modulated filter banks can be implemented efficiently using polyphase decomposition and fast signal transforms. In [1] a general framework for oversampled DFT modulated subband systems was proposed. A DFT modulated filter bank with $N$-fold downsampling can be implemented as a tapped delay line of size $N$ followed by a structured $M \times N$-matrix $\mathbf{B}(z)$, containing polyphase components of the prototype $h_0[k]$, and an $M \times M$-DFT matrix $\mathbf{F}$ (see figure 2). At the right hand side the inverse operations take place. $\mathbf{B}(z)$ is a structured matrix. Its non-zero entries are polyphase components of the analysis proto-

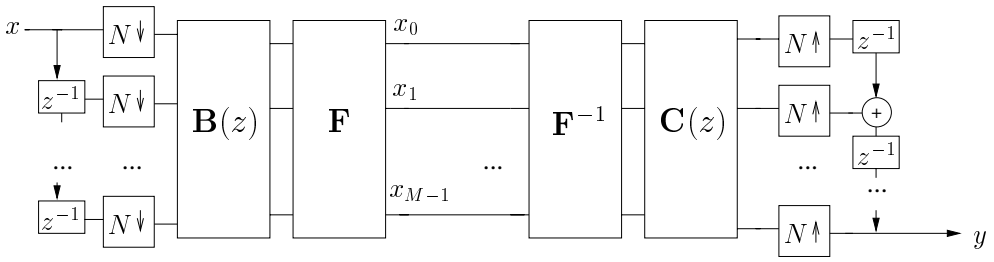


Figure 2: A DFT modulated subband system

type filter $h_0[k]$. It can be shown that element $(i,j)$ of $\mathbf{B}(z)$ is given by :

$$\begin{aligned} B_{ij}(z) &= z^{-l} H_{(j+lN):K}(z^J) && (i-j) \bmod g = 0 \\ &= 0 && (i-j) \bmod g \neq 0 \end{aligned} \tag{2}$$

$(j+lN) \bmod M = i$, $J = \frac{M}{g}$, $g = \gcd(M,N)$, $K = \frac{MN}{g}$
$H_{k:K}(z)$ is the $k$-th $K$-th order polyphase component of the prototype filter $h_0[k]$. The synthesis bank is constructed in a similar fashion with matrix $\mathbf{C}(z)$.
Consider the following example : for $M = 6$ and $N = 4$, then $\mathbf{B}(z)$ is

$$\begin{bmatrix} H_0(z^3) & 0 & z^{-1}H_6(z^3) & 0 \\ 0 & H_1(z^3) & 0 & z^{-1}H_7(z^3) \\ z^{-2}H_8(z^3) & 0 & H_2(z^3) & 0 \\ 0 & z^{-2}H_9(z^3) & 0 & H_3(z^3) \\ z^{-1}H_4(z^3) & 0 & z^{-2}H_{10}(z^3) & 0 \\ 0 & z^{-1}H_5(z^3) & 0 & z^{-2}H_{11}(z^3) \end{bmatrix} \tag{3}$$

## 3 PERFECT RECONSTRUCTION

Ideally, signal $y$ at the output of the subband scheme is an exact (delayed) version of the input $x$. A DFT modulated analysis/synthesis filter bank set is therefore designed such that the following conditions are met :

- the (analysis) filters are frequency selective. This prevents inserting too much inter-subband aliasing due to the downsampling operation. Inter-subband aliasing has a negative impact on possible intermediate operations performed on the subband signals (e.g. subband adaptive filtering).
- the analysis/synthesis filter bank set is (nearly) perfectly reconstructing. A condition ensuring perfect reconstruction is

$$\mathbf{C}(z)\mathbf{B}(z) = I \tag{4}$$

$\mathbf{C}(z)$ can be chosen to be the paraconjugate (see [4]) of $\mathbf{B}(z)$ :

$$\mathbf{C}(z) = \tilde{\mathbf{B}}(z) = \mathbf{B}_*^T(z^{-1}), \tag{5}$$

i.e. $\mathbf{C}(z)$ is obtained by transposing $\mathbf{B}(z)$, replacing all filter coefficients by their complex conjugate and changing $z$ to $z^{-1}$. If now $\mathbf{B}(z)$ is designed to be para-unitary, then

$$\mathbf{C}(z)\mathbf{B}(z) = \tilde{\mathbf{B}}(z)\mathbf{B}(z) = I, \tag{6}$$

so that a perfect reconstruction subband system is obtained.

## 4 IMPOSING PARA-UNITARINESS

$\mathbf{B}(z)$ is a structured matrix with non-zero entries forming a band pattern (Eq. 3). Row or column permutations (contained in a permutation matrix $P$) do not affect the para-unitariness of $\mathbf{B}(z)$. After permutation a block diagonal matrix can be obtained having $g$ dense blocks $\mathbf{S}_\gamma(z)$ of dimension $\frac{M}{g} \times \frac{N}{g}$. All $\frac{MN}{g}$ polyphase components are now contained in one of these sub-matrices. Referring to the example, $\mathbf{B}(z)$ is transformed into $P\mathbf{B}(z)$ :

$$\left[\begin{array}{cc|cc} H_0(z^3) & z^{-1}H_6(z^3) & 0 & 0 \\ z^{-2}H_8(z^3) & H_2(z^3) & 0 & 0 \\ z^{-1}H_4(z^3) & z^{-2}H_{10}(z^3) & 0 & 0 \\ \hline 0 & 0 & H_1(z^3) & z^{-1}H_7(z^3) \\ 0 & 0 & z^{-2}H_9(z^3) & H_3(z^3) \\ 0 & 0 & z^{-1}H_5(z^3) & z^{-2}H_{11}(z^3) \end{array}\right] \tag{7}$$

$P\mathbf{B}(z)$ is then para-unitary if each sub-matrix $\mathbf{S}_\gamma(z)$ itself is para-unitary.
The non-zero elements of $P\mathbf{B}(z)$, $z^{-l}H_{(j+lN):K}(z^J)$, are delayed $J$-fold upsampled polyphase filters. It would be more efficient to optimise $H_{(j+lN):K}(z)$ instead of its upsampled form. The delays $z^{-l}$ pose a problem however. Now, it appears that the delays can always be made multiples of $J$ by pre- and post-multiplication with the appropriate para-unitary diagonal matrices $\mathbf{L}(z)$ and $\mathbf{R}(z)$, such that $\bar{\mathbf{S}}_\gamma(z^J) = \mathbf{L}(z)\mathbf{S}_\gamma(z)\mathbf{R}(z)$. Hence, the para-unitariness of $\mathbf{B}(z)$ comes down to imposing para-unitariness on a set of dense matrices $\bar{\mathbf{S}}_\gamma(z)$, which contain (low-order) delays and (subsampled) prototype polyphase components. For more details we refer to [2].
Again we take up the example : each sub-matrix has dimensions $3 \times 2$. After manipulation $\mathbf{S}_0(z)$ for instance looks like

$$\bar{\mathbf{S}}_0(z) = \begin{bmatrix} H_0(z) & H_6(z) \\ z^{-1}H_8(z) & H_2(z) \\ H_4(z) & H_{10}(z) \end{bmatrix}. \tag{8}$$

Each of these rectangular blocks $\bar{\mathbf{S}}_\gamma(z)$ can be embedded in a larger square matrix whose para-unitariness automatically implies the para-unitariness of a subset of its columns. Square matrices can be parametrised to be perfectly reconstructing using para-unitary lattices.

## 5 PARA-UNITARY LATTICES

An $M \times M$ FIR causal and para-unitary matrix of degree $L$ can be decomposed as [4] :

$$\mathbf{H}_L(z) = \mathbf{V}_L(z)\mathbf{V}_{L-1}(z)...\mathbf{V}_1(z)U \tag{9}$$

$\mathbf{V}_i(z)$ are degree-1 para-unitary building blocks :

$$\mathbf{V}_i(z) = I - v_i v_i^\dagger + z^{-1} v_i v_i^\dagger \tag{10}$$

$U$ is a unitary matrix which itself can be decomposed as :

$$U = \sqrt{d} U_1 U_2 ... U_{M-1} D \tag{11}$$

$U_i$ are Householder matrices :

$$U_i = I - 2 u_i u_i^\dagger \tag{12}$$

$v_i$ and $u_i$ are $M \times 1$ unit norm vectors. Here we assume the prototype filter is real, and then $D = I, d = 1$.
The $M \times M$ unitary matrix $U$ is characterised by $M-1$ vectors $u_i$. It can be proven (see [4]) that in order to lead to a consistent description matrix $\begin{bmatrix} u_1 & u_2 & \dots & u_{M-1} \end{bmatrix}$ can have the following lower triangular form :

$$\begin{bmatrix} u_1(1) & 0 & \cdots & 0 \\ u_1(2) & u_2(2) & \cdots & 0 \\ \vdots & \vdots & \ddots & \vdots \\ u_1(M-1) & u_2(M-1) & \cdots & u_{M-1}(M-1) \\ u_1(M) & u_2(M) & \cdots & u_{M-1}(M) \end{bmatrix} \tag{13}$$

$v_i$ and $u_i$ are being optimised such that the para-unitary filter bank has a good frequency selectivity. The delays present in Eq. 8 only play a role when the optimal parametrisation is transformed back into the set of para-unitary sub-matrices $\bar{\mathbf{S}}_\gamma(z)$ and linked to the prototype $h_0[k]$. The delays force the polyphase component to be shifted into the anti-causal direction.
The polyphase filter length can be chosen freely and controls the order of the matrix decompositions (see Eq. 9). It is therefore related to the complexity of the optimisation problem and of course determines the prototype filter length. The different sub-matrices contain polyphase filters covering a major part of the prototype filter time domain range. In general, all polyphase components will have the same length, restricting the prototype filter length to vary in steps of $K$, the least common multiple of $M$ and $N$. This can be quite unattractive and restricts the design freedom : for $M = 32$ and $N = 28, K = 224$ !
Finding good starting values for $v_i$ and $u_i$ is not trivial. The optimisation time strongly depends on the quality of the initial values. Random initialisation will lead to satisfactory results after some trial rounds. Decomposing a well-chosen prototype filter in its $v_i$ and $u_i$ parameters will in general not be possible by lack of para-unitariness. However, a well-chosen prototype will be approximated by its "nearest" para-unitary filter bank, typically leading to better starting values.
The $(v_i, u_i)$ description corresponding to a perfect reconstruction prototype can be found by the inverse decomposition corresponding to Eq. 9 and 11. It is based on singular value decomposition, pseudo-inverse and Householder factorisation (see [2]).
The above procedure is illustrated by means of an example. Again the $M = 6$, $N = 4$ case is considered. An 88 taps FIR prototype filter was found by optimisation. The result is shown in figure 3. The aliasing level introduced by a single filter bank is around -32 dB. A design procedure optimising the parameters

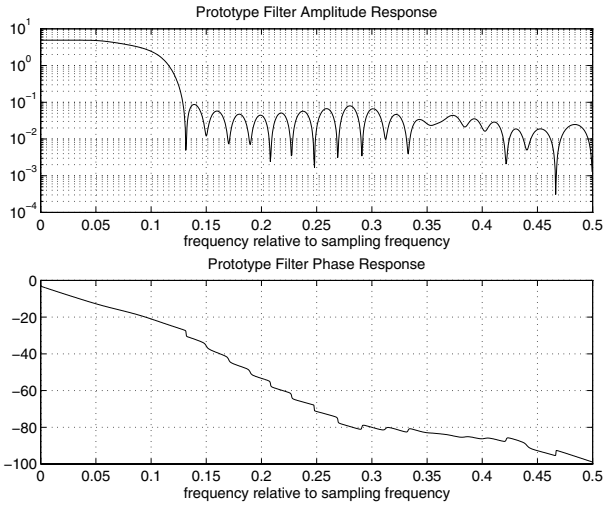


Figure 3: Perfect Reconstruction Oversampled Filter Bank : Prototype Characteristics

$v_i$ and $u_i$ allows to obtain a para-unitary filter bank set with a good frequency selectivity.

## 6 NEARLY PERFECT RECONSTRUCTION

Perfect reconstruction is a noble but also a restrictive property. It ensures that signals are passed through the subband system without any quality losses. Quite often the effect of perfect reconstruction is overruled by injected noise and algorithm imperfections (residual errors in echo cancellation for instance). Perfect reconstruction can therefore be relaxed to 'nearly' perfect reconstruction by admitting some amplitude, phase and aliasing distortion,

as long as the distortion is not noticeable or is acceptably low. A frequency-domain based optimisation algorithm was developed to design nearly perfect reconstruction subband systems.

Phase distortion in sound transmission is not detrimental as long as abrupt phase transitions are avoided. Small amplitude distortion will not lead to significant perceptual quality losses. A prototype filter can be designed by optimising the lowpass characteristics and the overall amplitude distortion. Instead of the overall amplitude distortion only the distortion from neighbouring bands is taken in account in practice. In this way a filter bank can be obtained having better bandpass characteristics, which leads to decreased aliasing distortion levels and improved convergence in case of adaptive filtering.

Consider the following example : a nearly perfect reconstruction filter bank set is designed for the $M = 6$, $N = 4$ case (compare it with figure 3). The

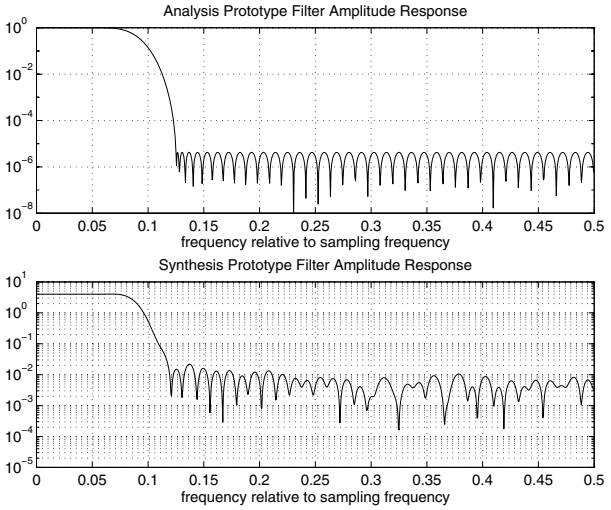


Figure 4: Nearly Perfect Reconstruction Oversampled Filter Bank : Prototype Characteristics

analysis and synthesis bank characteristics are different. The analysis prototype was designed with the Parks-McClellan exchange algorithm and has a uniform stopband suppression. The synthesis filter was optimised to obtain a subband system with a small amplitude distortion. The aliasing level introduced by the analysis bank is around -100 dB. The synthesis bank has a -44 dB aliasing level. The maximal amplitude distortion of the analysis-synthesis pair is 0.11% at 0.25 Hz and the maximal phase distortion is 0.026° at 0.44 Hz. The perceptual distortion has been verified to be sufficiently small.

## 7 CONCLUSIONS

In this a paper we presented a design procedure for (nearly) perfectly reconstructing DFT modulated oversampled filter bank systems. By exploiting the structure of a DFT modulated oversampled filter bank a perfect reconstruction condition can be imposed. Perfect reconstruction is a noble but also a restrictive property. A frequency-domain based optimisation algorithm relaxing this condition was developed to design nearly perfect reconstruction subband systems.


### Acknowledgements

Marc Moonen is a Research Associate with the F.W.O. Vlaanderen (Flemish Fund for Science and Research). This research was carried out at the ESAT laboratory of the Katholieke Universiteit Leuven and was partly funded by the Concerted Research Action MIPS (Model-based Information Processing Systems) and F.W.O. project nr. G.0295.97 of the Flemish Government, and the Interuniversity Attraction Pole (IUAP-nr.02) initiated by the Belgian State, Prime Minister's Office for Science, Technology and Culture. The scientific responsibility is assumed by its authors.


### References


[1] Z. Cvetković. Oversampled Modulated Filter Banks and Tight Gabor Frames in $l^2(\mathbb{Z})$. In *Proceedings of the 1995 IEEE Int. Conf. on Acoust., Speech and Signal Processing*, pages 1456–1459, Detroit, Michigan, USA, May 1995.

[2] K. Eneman and M. Moonen. Para-Unitary Filter Bank Design for Oversampled Subband Systems. Technical Report 97-119 (`ftp.esat.kuleuven.ac.be/pub/SISTA/eneman/reports/int97-119.ps.gz`), ESAT-SISTA, Katholieke Universiteit Leuven, Belgium, December 1997.

[3] K. Kajita, H. Kobayashi, S. Muramatsu, A. Yamada, and H. Kiya. A Design Method for Oversampled Paraunitary DFT Filter Banks using Householder Factorization. In *Proceedings of the European Signal Processing Conference (EUSIPCO-96)*, pages 192–195, Trieste, Italy, September 1996.

[4] P. Vaidyanathan. *Multirate Systems and Filter Banks*. Prentice Hall, Englewood Cliffs, New Jersey, USA, 1993.

[5] M. Vetterli and Z. Cvetković. Oversampled FIR Filter Banks and Frames in $l^2(\mathbb{Z})$. In *Proceedings of the 1996 IEEE Int. Conf. on Acoust., Speech and Signal Processing*, pages 1530–1533, Atlanta, Georgia, USA, May 1996.

[6] M. Vetterli and D. Le Gall. Perfect Reconstruction FIR Filter Banks: Some Properties and Factorizations. *IEEE Trans. Acoust., Speech and Signal Processing*, 37(7):1057–1071, July 1989.

[7] X.-G. Xia and B. Suter. FIR Paraunitary Filter Banks Given Several Analysis Filters: Factorizations and Constructions. *IEEE Trans. Signal Processing*, 44(3):720–723, March 1996.