Heterogeneous and Multi-Task Wireless Sensor Networks - Algorithms, Applications and Challenges

Jorge Plata-Chaves, *Member, IEEE,* Alexander Bertrand, *Member, IEEE,* Marc Moonen, *Fellow, IEEE,* Sergios Theodoridis, *Fellow, IEEE* and Abdelhak M. Zoubir, *Fellow, IEEE*

***Abstract*—Unlike traditional homogeneous single-task wireless sensor networks (WSNs), heterogeneous and multi-task WSNs allow the cooperation among multiple heterogeneous devices dedicated to solving different signal processing tasks. Despite the possible conflicts of interests between the devices, the goal is to let each device solve its task with a superior performance compared to the case where it would operate on its own. However, the design of such heterogeneous WSNs is very challenging and requires the design of scalable algorithms that maximize the performance of the devices without transmitting their raw sensor signals in an uncontrolled fashion. Towards this goal, novel techniques are needed both on the signal processing level and on the network-communication level. In this paper, we give an overview of applications in the field of heterogeneous and multi-task WSNs with special focus on the signal processing aspects. Moreover, we provide a general overview of the existing algorithms for distributed node-specific estimation. Finally, we discuss the main challenges that have to be tackled for the design of heterogeneous multi-task WSNs.**

***Index Terms*—Heterogeneous and multi-task networks, wireless sensor networks, node-specific estimation, detection, labeling.**

I. Introduction

In today's digital age, we are surrounded by portable devices, many of which are able to sense and/or act on the environment and are equipped with computing and wireless communication capabilities. Some examples are smartphones, hands-free telephony kits, tablets, laptops, hearing aids, hand-held cameras or even more futuristic devices such as head-mounted displays. Usually, all these devices operate on their own to perform a specific signal processing task ('single device for a single task' or SDST system), or to perform multiple tasks ('single device for multiple tasks' or SDMT system). Alternatively, the spatial diversity of the sensor signals acquired by different devices can be leveraged to achieve superior performance. However, due to the sheer volume of data, centralizing these signals would require a large communication bandwidth and computing power, which is often unavailable. To avoid the need for a dedicated and power-hungry central processing device and still achieve superior performance as compared to the non-cooperative approach, distributed and cooperative processing of the signals with multiple devices in a wireless sensor networks (WSN)-like architecture is preferred. However, traditional WSNs typically assume a homogeneous setting in which all the devices, also referred to as node, are of the same type and cooperate to solve a single network-wide signal processing task ('multiple devices for a single task' or MDST).

Motivated by the heterogeneity of the devices in the emerging field of Internet-of-Things (IoT), there is currently a growing interest in more general systems that overcome the limitations of the aforementioned SDST, SDMT or MDST system configurations. These general systems are referred to as heterogeneous multi-task WSNs ('multiple devices for multiple tasks' or MDMT systems). These WSNs are formed by heterogeneous devices that cooperate with each other although their sensor signals arise from different models as a result of observing different but overlapping phenomena. Furthermore, the devices of these WSNs can exploit the spatial diversity of the sensor signals by cooperating with each other although they are interested in solving different but related signal processing (SP) tasks. Hence, the usage of each device in a heterogeneous multi-task WSN is not constrained to its own task or a single and common network-wide task. Instead, the usage of each device goes beyond its own task and interest by cooperating with multiple devices in order to solve multiple SP tasks simultaneously and achieve a superior performance as compared to the case where the devices would operate on their own.

Due to its heterogeneous and multi-task nature, the design of MDMT nature is very challenging and requires

Copyright (c) 2016 IEEE. Personal use of this material is permitted. However, permission to use this material for any other purposes must be obtained from the IEEE by sending a request to pubs-permissions@ieee.org.

J. Plata-Chaves, A. Bertrand and M. Moonen are with the Stadius Center for Dynamical Systems, Signal Processing and Data Analytics (STADIUS), Department of Electrical Engineering (ESAT), KU Leuven, B-3001 Leuven, Belgium (e-mails: {jplata, alexander.bertrand,marc.moonen}@esat.kuleuven.be).

S. Theodoridis is with the Department of Informatics and Telecommunications, University of Athens, 15784 Athens, Greece (e-mail: stheodor@di.uoa.gr).

A. M. Zoubir is with the Signal Processing Group, Institut für Nachrichtentechnik, Technische Universität Darmstadt, 64283 Darmstadt, Germany (e-mail: zoubir@spg.tu-darmstadt.de).

This work was carried out at the ESAT Laboratory of KU Leuven, in the frame of KU Leuven Research Council CoE PFV/10/002 (OPTEC) and BOF/STG-14-005, the Interuniversity Attractive Poles Programme initiated by the Belgian Science Policy Office IUAP P7/23 'Belgian network on stochastic modeling analysis design and optimization of communication systems' (BESTCOM) 2012-2017, Research Project FWO nr. G.0931.14 'Design of distributed signal processing algorithms and scalable hardware platforms for energy-vs-performance adaptive wireless acoustic sensor networks', and EU/FP7 project HANDiCAMS. The project HANDiCAMS acknowledges the financial support of the Future and Emerging Technologies (FET) programme within the Seventh Framework Programme for Research of the European Commission, under FET-Open grant number: 323944. The scientific responsibility is assumed by its authors.

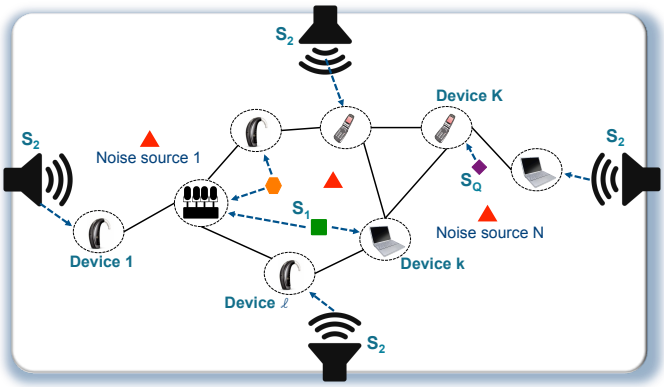

Fig. 1. Distributed node-specific speech enhancement system with K devices, N localized noise sources and Q desired sources, one of them associated with a PA system. Solid lines denote the wireless cooperation links among the devices, while the dashed arrows plot which sources are within the interest of each device. Noise sources are plotted as red triangles.

novel techniques both on the signal processing and network-communication level. In this paper, we provide an overview of the state of the art, the current trends and future directions in SP algorithms for heterogeneous and multi-task WSNs. We focus on describing some relevant applications and providing a high level overview of the SP techniques employed in the design of distributed algorithms for multi-task estimation. Finally, we discuss the the main challenges and open problems.

The paper is organized as follows. In Section II, we describe the applications that run over heterogeneous and multi-task WSNs. Section III is devoted to provide a high-level overview of the existing SP techniques employed for the design of distributed node-specific estimation algorithms over heterogeneous and multi-task networks. In Section IV, we examine the main challenges and open problems related to the design of heterogeneous and multi-task WSNs. Finally, Section V summarizes the work.

II. Example Applications

Although the appearance of heterogeneous and multi-task WSNs is very recent, there are many emerging applications that indeed take advantage of the cooperation of multiple heterogeneous devices in multiple SP tasks. Some examples of such MDMT-based applications are provided in the following.

A. Distributed node-specific speech enhancement

Enhancement of speech or audio signals is probably the most common application of multi-microphone SP. Currently, in the emerging IoT, this SP task is present in many heterogeneous devices, each interested in different speech sources. Fig. 1 considers a scenario, e.g., in an airport or a conference venue, where many people are present using different multimedia devices. In particular, in this scenario one person (Source S_1) is using a laptop (Device k) for a video call. At the same time, a nearby person (device ℓ) wearing a hearing aid (HA) is listening to a public announcement played by a Public Address (PA) system (Source S_2). Since the acoustic background noise from the many other sound sources severely affects the intelligibility of the recorded speech signals in the smartphone as well as in the HA, each individual device traditionally runs a separate speech enhancement algorithm, which processes the signals recorded by its own on-board microphones [1]. Typically, there are two or three on-board microphones in each device, which can only sample the audio field locally and therefore limit the performance of the speech enhancement algorithm operated at each device. In contrast with this traditional SDST approach, by leveraging the wireless capabilities of today's digital devices, the laptop and the HA could exchange their microphone signals to boost the performance of their node-specific speech enhancement [2]. The extensions of this line of thought to ad-hoc architectures, such as the emerging IoT, has been the building principle of several distributed speech enhancement algorithms [3]-[8]. In these algorithms, many (e.g., hundreds) randomly deployed devices (e.g., HAs, smartphones, laptops, etc.) cooperate with each other despite the fact that they are interested in enhancing different speech sources [3]-[7] and their microphone signals may arise from different observation models [8] (i.e., are influenced by different phenomena). Through this cooperation, the participating devices are able to simultaneously tackle their node-specific speech enhancement tasks and achieve superior performance as compared to the case where they would operate on their own. A wireless network of microphone-equipped devices as in the above example is often referred to as a wireless acoustic sensor network (WASN).

B. Distributed node-specific image/video enhancement

An image/video counterpart of the node-specific speech enhancement can also be found for wireless camera networks, in which case overlapping images or video streams of multiple cameras with different resolutions can be fused to improve the image resolution, guarantee line of sight, etc. in each individual device [9], [10]. By leveraging the local processing power of the cameras and letting them exchange different features of their low-resolution images/videos [11], the resulting image/video fusion algorithms allow each device to generate super-resolution images or videos of their region of interest. Consider a scenario where several people are watching the same scene (e.g., during a concert or a sports event), and are wearing, e.g., smart glasses equipped with cameras synthesizing the intended view onto the glass. By fusing the vast visual and highly unstructured information available, everyone's view can be enhanced or a camera can zoom in on a specific far-away object in the scene, where the low-resolution zoom is enhanced. As in the distributed node-specific speech enhancement algorithms, it is noted that, although there is a common scene, different devices are interested in enhancing different regions of interests.

C. Distributed node-specific active noise control

The main idea of classical Active Noise Control (ANC) [12] consists in estimating adaptive filters that -when applied to a set of reference signals- let an actuator or loudspeaker generate a secondary signal canceling a primary noise signal as it is recorded by a microphone. Currently, there is an increasing

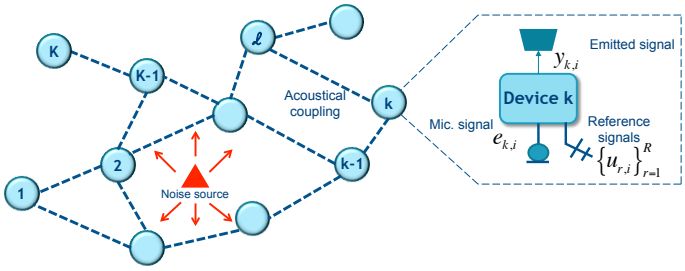

Fig. 2. Distributed ANC system with K devices. A link between the devices indicates that they are acoustically coupled.

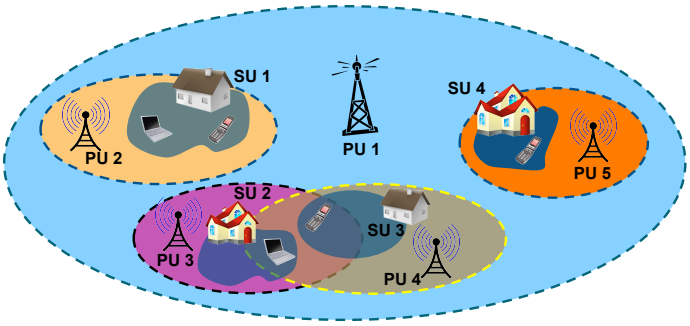

Fig. 3. Cellular network with macro, femto and pico tiers. Illustrating the problem of node-specific cooperative spectrum sensing, pico cells are considered to be SUs, while the femto cells and the macro cells are the PUs. Each of the SUs aims at estimating the aggregated spectrum of the PUs that belong to upper tiers.

interest in distributed solutions for ANC over WASNs. As shown in Fig. 2, a distributed ANC system [13]-[15] consists of a multitude of devices, each typically equipped with one single microphone that records a signal from a primary noise source and a loudspeaker that acts on the environment by emitting a signal aimed at canceling the recorded noise signal. To better exploit the spatial diversity of the acoustic field and hence obtain a better cancellation, the cooperation among the devices has shown to be very useful [13]-[15]. However, the signals emitted by the loudspeaker of one device can be received by the microphone of other neighboring devices. Since each device has different neighbors, the previous acoustical coupling varies from device to device (see Fig. 2). Moreover, notice that there exists a different acoustic transfer function between the primary noise source and each microphone of each device. As a result, in a distributed ANC system, the devices have different tasks, i.e., tackle different but interrelated ANC problems. In this context, the derivation of novel node-specific adaptive filtering techniques has been shown to be of paramount importance when providing distributed and cooperative algorithms where the per-device communication cost and the computational complexity is independent of the network size [16]. Indeed, further research efforts in this direction are expected to be the key elements for the development of next-generation ANC systems highly demanded by ,e.g., the car and aeronautic industry.

D. Distributed node-specific cooperative spectrum sensing

Cognitive Radio (CR) networks are considered to be essential to satisfy the increasing demand for high data rates communication. In order to opportunistically employ scarce spectrum resources, secondary users (SUs) have to sense the spectrum in order to employ unoccupied spectral bands without creating excessive interference to licensed primary users (PUs). For instance, the deployment of small cells, which correspond to the SUs in this case, is considered to be a key element to increase the spectral efficiency of modern cellular networks. However, since the small cells usually have an unpredictable deployment, they may cause intolerable interference to users of upper tiers or PUs (see Fig. 3). Therefore, the allocation of communication resources to the users at these small cells needs to be done through CR-based spectrum sensing techniques.

The spectrum sensing step can be done independently by each SU. However, such a non-cooperative strategy can be impaired by shadowing effects under which the spectrum sensing problem is ill-posed. Overcoming the non-cooperative strategies, the aggregated spectrum of the PUs can be estimated by all the SUs in a cooperative and distributed fashion. Most existing solutions (e.g., [17]-[20]) have assumed that the SUs sense the aggregated spectrum of the same set of PUs. However, due to attenuation properties of the medium and the different positions of the SUs, the SUs can sense the aggregated spectrum of different but possibly overlapping sets of PUs (e.g., see Fig. 3). To outperform the non-cooperative strategies with a complexity that is scalable with the network size, cooperation among the SUs is relevant even though they have to sense the aggregated spectrum of different PUs, which again corresponds to an MDMT system.

E. Distributed multi-area power system state estimation

Toward the modernization of the electrical grid, system operators require new algorithms for power system state estimation (PSSE). PSSE consists in estimating the network-wide state $\mathbf{x}$ of the grid, i.e., the voltage phasors at all buses of the network, from voltage and current measurements performed by different kinds of sensors or devices (see Fig. 4).

Within the category of distributed PSSE methods, early works, e.g., [21]-[25], have relied on hierarchical coordinators that estimate the state $\mathbf{x}_k$ of different network partitions, which are referred to as areas [26] as shown in Fig. 4. Nonetheless, these methods require full local observability in each area, which is not necessarily the case, especially if malicious data is injected in the measurements [27] such as, e.g., intentional metering faults. To provide more robust and reliable solutions without hierarchical coordinators and/or full local observability in each area, several distributed algorithms have been proposed by relying on an iterative exchange of information between neighboring areas. However, the computational and communication complexity of many of these algorithms are not scalable with the network size since they ignore that the coupling between the measurements of different areas takes place due to the current measurements over lines spanning several control areas, referred to as tie lines. For instance, due to current measurements performed over tie lines, in Fig. 4 the state vector of area S_1 depends on the voltage phasor of a

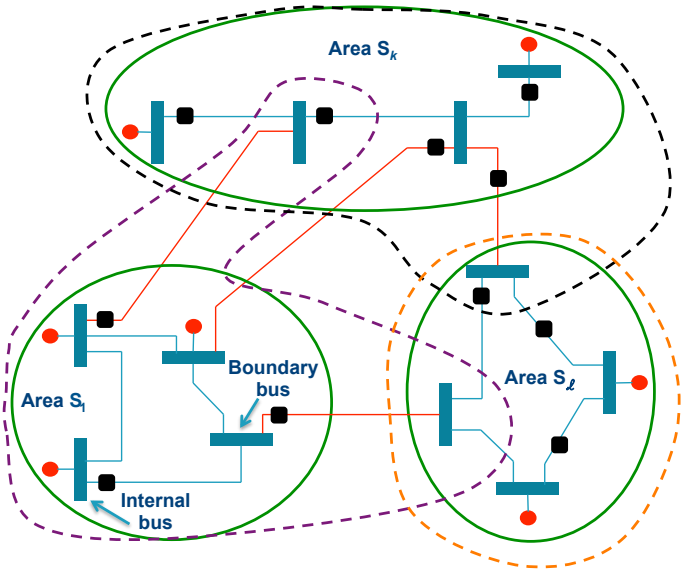

Fig. 4. Smart grid partitioned in several areas illustrating the node-specific PSSE problem. Dotted lassos show the set of buses that influence a specific area state vector. Tie lines are depicted in red, while bus voltage and line current measurements are plotted by red circles and by black squares, respectively.

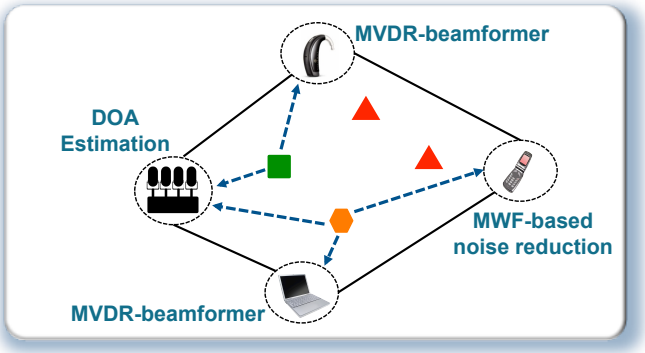

Fig. 5. Multi-task WASN for node-specific speech enhancement and DOA estimation. Solid black lines denote the wireless cooperation links among the devices, while the dashed arrows plot which sources are within the interest of each device. Localized noise sources, i.e., sources that are not within the interest of any device, are plotted as red triangles.

boundary bus of area S_k and a bus of area S_ℓ. Similarly, due to the current measurement performed by area S_k over the tie line interconnecting areas S_k and S_ℓ, the state vector of area S_k depends on a boundary bus of area S_ℓ. In contrast, since area S_ℓ does not perform any measurement over tie lines, its state vector does not depend on the variables associated with buses belonging to other areas.

Due to the deregulation of energy markets, large amounts of power are currently transferred over the tie lines. As a result, tie lines, originally added to handle emergency situations, are now fully operational and must be monitored, which yields an unavoidable overlapping between the state vector of different inter-connected areas. In this setting, node-specific PSSE algorithms provide solutions for the PSSE problem that are scalable with the number of buses in the network and that are still robust to lack of full observability at the control areas. Similarly to MDMT-based algorithms for other multi-task applications, the node-specific PSSE algorithms let the different control areas cooperate even though they aim at estimating different but overlapping state vectors. In this cooperation, adhering to privacy policies that could be established by the energy market, the different control areas only need to share bus estimates associated with tie lines. Despite this limited cooperation, the different control areas can simultaneously estimate their local state vectors although there is no full observability. Moreover, they can achieve superior performance as compared to the case where each control area solves its local PSSE problem independently. Some node-specific PSSE algorithms have been proposed based on extensions of different inference methods such as the alternating direction method of multipliers [28] or the gossip-based Gauss-Newton method [29]. However, novel MDMT-based algorithms for PSSE as well as for other monitoring and control tasks (e.g., the identification of intentional metering faults or other malicious data injections [27]) are needed to stir up the current smart grids.

F. Heterogeneous WSNs operating multiple algorithms

All previous applications consider an MDMT system where all devices cooperate to obtain node-specific solutions, but where all of them are locally undertaking similar SP tasks (e.g., speech enhancement, ANC, spectrum estimation, etc.,). Moreover, to obtain the node-specific solutions, all the devices of the network employ the same (type of) estimation algorithm, e.g., a particular adaptive filter or a beamformer. However, in the emerging IoT, the devices may be interested in tackling very different SP tasks. Furthermore, depending on the performance required by their corresponding application layer, two devices may tackle the same SP by applying different algorithms, e.g., filters or beamformers. In many of these situations, although the SP tasks or the applied algorithms are different, the corresponding solutions may be correlated or inter-related. For instance, in the scenario given in Fig. 6, some of the devices of the network is interested in estimating the node-specific directions of arrivals (DOAs) of some of the desired sources, while, at the same time, other devices may aim to enhance different desired source signals by using different beamformers. In this highly heterogeneous setting, the devices can indeed assist each other to simultaneously solve their SP tasks. As shown in [30], by following properly designed in-network processing rules, in the network of Fig. 6 each device can tackle its SP task as if it had access to all sensor signals of the network and without communicating all the sensor signals to all devices in the network.

Similarly to the MDMT system shown in Fig. 6, many other examples can be envisaged for networks where the devices are used for different applications (e.g., tracking of objects through DoA estimation, node-specific ANC of primary noise sources, VoIP acoustic echo cancellation, 3D or super-resolution video recording, etc.). In all these examples, the wireless connectivity can be leveraged through an algorithmic framework that establishes an ad-hoc SP cooperation among heterogeneous devices even though they are tackling different SP tasks.

Application	Type		Reference
Signal estimation	Fully connected		[3]-[4], [6]-[8], [31]-[32]
	Tree and mixed topologies		[5], [33]-[34]
Parameter estimation	Incremental		[16], [35], [36]
	Consensus		[28], [37]
	Diffusion	Supervised	[38], [39]-[44]
		Unsupervised	[45], [46]-[54]

TABLE I
SOME ALGORITHMS FOR DISTRIBUTED ESTIMATION OVER MULTI-TASK NETWORKS

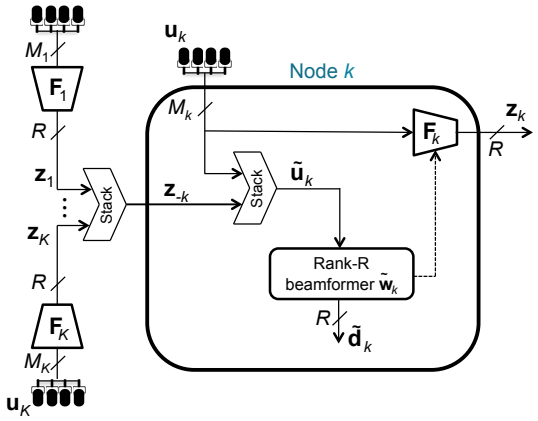

Fig. 6. High-level block scheme of a generic algorithm for distributed node-specific signal estimation over a fully-connected network with K nodes.

III. DISTRIBUTED NODE-SPECIFIC ESTIMATION IN HETEROGENEOUS AND MULTI-TASK WSNS

Most of the available algorithms for multi-task WSNs have been derived to solve distributed estimation problems. Some of these distributed algorithms are listed in Table I. In this section, we provide a high level overview of the-state-of-the-art of these algorithms.

A. Distributed node-specific signal estimation

Distributed algorithms for signal estimation in a multi-task WSN with K devices or nodes aim to cooperatively estimate samples of different node-specific desired signals $\{\mathbf{d}_k\}_{k=1}^K$ while canceling node-specific interfering signals as well as background noise. To obtain these estimates, denoted as $\{\tilde{\mathbf{d}}_k\}_{k=1}^K$, as shown in Fig. 6, most of these algorithms apply different but inter-related linear spatial filters or beamformers $\{\widetilde{\mathbf{w}}_k\}_{k=1}^K$. Each of these filters is locally computed at a node k and based on the signals $\tilde{\mathbf{u}}_k$, which are formed by staking the M_k sensor signals of node k, i.e., $\mathbf{u}_k$, together with linearly compressed versions of the sensor signals of other nodes, i.e., $\{\mathbf{z}_\ell\}_{\ell\neq k}$ where

$$\mathbf{z}_\ell = \mathbf{F}_\ell \mathbf{u}_\ell \tag{1}$$

with compression matrix $\mathbf{F}_\ell \in \mathbb{C}^{R\times M_\ell}$ and $R \leq M_\ell$.

Based on such compressive filter-and-sum operations, several distributed algorithms have been proposed for networks with a fully connected topology (see [3]-[4], [7]-[8]) as well as for networks with (possibly time-varying) tree topologies [5], [34], or combinations thereof [33]. In all these algorithms, through several iterations spread out over time, each node k exchanges a linearly compressed version of its sensor signals, i.e., $\mathbf{z}_k$, to cooperatively compute a spatial filter that generates the estimate $\mathbf{d}_k = \widetilde{\mathbf{w}}_k^H \tilde{\mathbf{u}}_k$, which is then proven to converge to their corresponding centralized estimate

$$\hat{\mathbf{d}}_k = \hat{\mathbf{w}}_k^H \mathbf{u} \tag{2}$$

for all $k \in \{1, 2, \ldots, K\}$, where $\mathbf{u}$ is the vector in which all $\mathbf{u}_k$ signals are stacked and where $\hat{\mathbf{w}}_k$ denotes the optimal network-wide spatial filter according to some cost function. For example, in the case of Multi-channel Wiener Filter (MWF) [3], $\hat{\mathbf{w}}_k$ is a network-wide linear minimum mean-squared error estimator (LMMSE) that minimizes

$$\begin{aligned}\widehat{\mathbf{w}}_k &= \underset{\mathbf{w}_k}{\operatorname{argmin}} \left\{J_k(\mathbf{w}_k)\right\} \\ &= \underset{\mathbf{w}_k}{\operatorname{argmin}} \left\{E \parallel \mathbf{d}_k - \mathbf{w}_k^H \mathbf{u} \parallel^2\right\}.\end{aligned} \tag{3}$$

where $E\{\cdot\}$ denotes the expectation operator. To obtain convergence to the centralized signal estimates in all the nodes, the algorithms typically assume that all the desired signals $\{\mathbf{d}_k\}_{k=1}^K$ span an R-dimensional signal subspace. If this is not the case, approximate solutions can be found, as in [7] and [32].

Since the node-specific desired signal $\mathbf{d}_k$ is not explicitly available at node k, it is generally assumed that the desired signals have an ON-OFF behaviour (as it is the case for, e.g. speech signals). Under this assumption, as explained in [2]-[3], the cooperative computation of each $\widetilde{\mathbf{w}}_k$ requires the implementation of a multi-source detector distinguishing the time intervals in which the desired sources are active, which corresponds to the main challenge described in Subsection IV-D.

Similar in-network processing rules have also been employed to let the nodes obtain centralized estimates of node-specific desired signals under the Minimum Variance Distortionless Response (MVDR) or Linearly Constrained Minimum Variance (LCMV) criterion. With the former criterion, by relying on an estimate of the column space of a network-wide so-called steering matrix, the distributed algorithm allows each node to minimize the output power of a multi-channel spatial filter subject to a set of linear constraints that preserve its locally observed desired signals without distortion [55]. With the latter criterion, the design of the multi-channel filter of each node is subject to extra linear constraints that allow to obtain distortionless network-wide estimates of desired node-specific sources and suppress (partially or fully) a node-

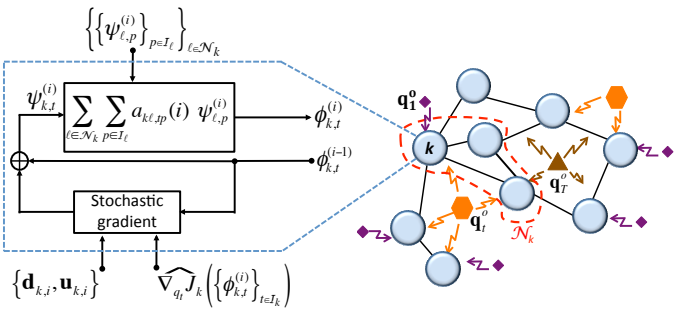

Fig. 7. High-level block scheme of a generic algorithm for distributed node-specific parameter estimation over a diffusion WSN. Solid black lines denote the wireless cooperation links among nodes with different parameter estimation interests $\{\mathbf{q}_t^o\}$, each with a global (e.g., $\mathbf{q}_T^o$), common (e.g., $\mathbf{q}_t^o$) or local (e.g., $\mathbf{q}_1^o$) area of influence.

specific set of interfering signals [6], [31].

B. Distributed node-specific parameter estimation

In the case of parameter estimation, the goal is to extract different node-specific parameters, such as the location of sources with respect to each node, the state of buses in a power grid, etc. To do so, each node k locally processes its sensor data $\{\mathbf{d}_{k,i}, \mathbf{u}_{k,i}\}$ where now $\mathbf{u}_{k,i}$ is the local regressor measured at time i, and where $\mathbf{d}_{k,i}$ is the corresponding (known) response. Moreover, node k cooperates with neighboring nodes, which form $\mathcal{N}_k$, by exchanging and fusing the estimates of parameter vectors that result from processing its local sensor signals.

Unlike in traditional single-task WSNs (e.g., see [56]-[61] and references therein), in multi-task WSNs the nodes simultaneously estimate different but inter-related parameters $\{\mathbf{w}_k^o\}_{k=1}^K$. For instance, as considered in several works (see e.g., [35], [38], and [52]-[54]) each node-specific parameter vector is defined as $\mathbf{w}_k^o = \text{col}\{\mathbf{q}_t^o\}_{t\in\mathcal{I}_k}$ where $\mathcal{I}_k$ denotes the subset of parameter vectors $\{q_t\}_{t=1}^T$ that are within the interest of node k with $\mathbf{q}_t^o$ equal to a parameter vector related to a phenomenon with a global, common or local area of influence Furthermore, the estimation problem is usually defined as

$$\underset{\{\mathbf{w}_k\}_{k=1}^K}{\text{argmin}} \left\{ \sum_{k=1}^K J_k(\mathbf{w}_k) \right\} \tag{4}$$

where $J_k(\cdot)$ denotes the regressor-based cost function associated with the estimation problem of node k. For instance, $J_k(\cdot)$ can correspond to the minimum mean square error cost function, i.e.,

$$J_k(\mathbf{w}_k) = E\{|\mathbf{d}_{k,i} - \mathbf{w}_k^H \mathbf{u}_{k,i}|^2\} \tag{5}$$

Unlike in the signal estimation problems in Subsection III-B, in addition to the input local regressor $\mathbf{u}_{k,i}$, the system response $\mathbf{d}_{k,i}$ is part of the *local* sensor data from which node k extracts the desired regression parameter vector $\mathbf{w}_k$. As opposed to (3) where $\mathbf{w}_k$ operates on the network-wide vector that results from stacking the local regressor data $\{\mathbf{u}_k\}_{k=1}^K$ of all the nodes, in (4)-(5) note that $\mathbf{w}_k$ only operates on the local sensor data $\mathbf{u}_{k,i}$. As a result, rather than exchanging compressed sensor signals to perform in-network spatial filtering, each node k now only exchanges parameter vectors that are then combined and re-estimated after time-recursion i and that vary at a slow time-scale as compared to the sampling rate of the sensor signals.

Recent works on distributed node-specific parameter estimation NSPE can be classified into three different categories (see Table I). The first category consists of algorithms that adopt techniques following a consensus approach. In brief, based on optimization techniques such as the alternating-direction method of multipliers, these consensus-based algorithms aim at forcing the nodes to reach an agreement on the estimates associated with their shared parameter estimation interests. Some interesting applications of this kind of algorithms can be found in the context of distributed PSSE [28], [37]. The second and third category are composed of distributed parameter estimation algorithms that rely on novel multi-task extensions of a particular adaptive filtering technique under different modes of cooperation, incremental and diffusion, respectively. Under the so-called incremental mode of cooperation, at each time instant i the data $\{\mathbf{d}_{k,i}, \mathbf{u}_{k,i}\}$ are processed in a cyclic manner throughout the network. By doing so, based on filtering techniques such as multiple error filtered-x Least Mean Square (MEFxLMS) [16], Least Mean Squares (LMS) [35] and Recursive Least Squares (RLS) [36], the network can solve a NSPE problem where the nodes have arbitrarily different but partially overlapping parameter estimation interests.

Better reliability and continuous learning can be achieved at the expense of an increased energy consumption in the well-established diffusion mode of cooperation. Unlike the incremental mode of cooperation, under a diffusion mode of cooperation, the estimation of a vector of parameters is undertaken by minimizing bottom-up definitions of optimality that approximate the solution of (4) attained by a central unit processing all the sensor signals. In particular, as shown in Fig. 7 for a setting with NSPE interests, to estimate a vector belonging to $\mathcal{I}_k$, each node k basically performs two steps, i.e. the adaptation and the combination step (see e.g., [36], [52]-[53]). In the adaptation step, at time instant i a node k obtains an intermediate estimate $\psi_{k,t}^{(i)}$ of a vector of parameters q_t^o by processing the local data $\{\mathbf{d}_{k,i}, \mathbf{u}_{k,i}\}$ and taking a small step in the direction of

$$\widehat{\nabla_{q_t} J_k}(\{\phi_{k,t}^{(i-1)}\}_{t\in\mathcal{I}_k}) \tag{6}$$

where $\phi_{k,t}^{(i-1)}$ denotes the local estimate of $\mathbf{q}_t^o$ at time instant $i-1$ and node k and where $\widehat{\nabla_{\mathbf{q}_t} J_k}(\cdot)$ is the stochastic approximation of the gradient of $J_k(\cdot)$ with respect to $\mathbf{q}_t$ with $t \in \mathcal{I}_k$. In the combination step, to obtain a local estimate $\phi_{k,t}^{(i)}$ of $\mathbf{q}_t^o$ at time instant i and task $t \in \mathcal{I}_k$, each node k linearly fuses $\psi_{k,t}^{(i)}$ and all the intermediate estimates for estimation tasks $p \in \mathcal{I}_\ell$ at each neighboring node $\ell \in \mathcal{N}_k$. For this step, node k employs a set of convex combination coefficients $\left\{\{a_{k\ell,tp}(i)\}_{p\in\mathcal{I}_\ell}\right\}_{\ell\in\mathcal{N}_k}$, i.e, $a_{k\ell,tp}(i) \geq 0$ and $\sum_{\ell\in\mathcal{N}_k}\sum_{p\in\mathcal{I}_\ell} a_{k\ell,tp}(i) = 1$. In contrast to diffusion-based algorithms for single-task WSNs [59], from (6) all the parameter estimation tasks at a node k are *coupled*. As a result, it should be noticed that the accuracy when estimating one parameter vector$\mathbf{q}_t^o$ can have an impact on the accuracy attained when

estimating another parameter vector $\mathbf{q}_p^o$ with $p \neq t$.

Depending on how much prior information is available at the nodes when fusing the estimates communicated by neighboring nodes, two major sub-categories of diffusion-based NSPE algorithms can be identified. The first sub-category considers a supervised setting where each node k knows a priori the relationship between its estimation tasks $\mathcal{I}_k$ and the estimation tasks of each of its neighbors, $\mathcal{I}_\ell$ with $\ell \in \mathcal{N}_k$. For instance, in [38] this prior information is leveraged to only combine local estimates of the same task at neighboring nodes, i.e., to set $a_{k\ell,tp}(i) = 0$ if $t \neq p$, which yields asymptotically unbiased solutions for a problem where the NSPE interests of each node k is defined as $\mathbf{w}_k^o = \text{col}\{\mathbf{q}_t^o\}_{t\in\mathcal{I}_k}$, which yields partially overlapping NSPE interests as long as the sets $\{\mathcal{I}_k\}_{k=1}^K$ are overlapping. Furthermore, similar prior information is leveraged by different diffusion-based algorithms that apply different spatial regularizers to let each node solve its estimation task w_k^o by using the local estimates of neighboring nodes with numerically similar estimation interests [39]-[44].

To avoid the bias resulting from the combination of local estimates associated with different tasks, which can yield worse performance than a non-cooperative approach (see [44], [46], [62]), the second sub-category of diffusion-based NSPE algorithms integrates adaptive clustering techniques into the inference process. In an unsupervised setting, these clustering techniques allow the nodes to infer which of their neighbors have the same interest. Since some of these works [46]-[50] assume that there is either complete or no overlap, i.e., either $\mathcal{I}_k = \mathcal{I}_\ell$ or $\mathcal{I}_k \cap \mathcal{I}_\ell = \emptyset$, the cooperation is limited to nodes that have the same objectives. This will then split the WSN in disconnected and independent sub-networks once the nodes have inferred the relationship between their estimation interests. To extend these results to a setting where the nodes cooperate even when they have different interest, recent works propose diffusion-based LMS algorithms that solve an unsupervised version of the NSPE problem considered in [35] and [38]. Towards this goal, some algorithms determine the convex coefficients of the combination step by solving suitably defined hypothesis testing problems [52] or by minimizing an instantaneous approximation of the mean-square deviation (MSD) attained by each node for each of its parameter estimation tasks [53]. Alternatively, assuming that the NSPE interests share a large number of components, the aforementioned NSPE problem is solved by relying on appropriate sparsity-based co-regularizers [45], [54].

IV. Main challenges

In addition to the applications described in Section II, it is noted that similar MDMT-based applications can be considered for any type of multi-sensor estimation algorithm (be it for audio, video, biomedical, environmental sensors, etc.). Each of these applications or problem statements has different constraints/assumptions and requires the design of specialized algorithms with unique properties, which brings a wide range of challenges. In this section, we describe the main challenges related to the design of MDMT systems.

A. Top-down vs. bottom-up in-network processing in multi-task WSN

In-network processing is usually envisaged such that the sensor signals collected by the devices are jointly processed by the devices (inside the network), rather than in a central processing unit, which is often unfeasible due to the large amount of generated data. When designing these in-network processing rules in MDMT systems, the goal is to maximize the performance of the devices in their different SP tasks by relying on nearest-neighbour cooperations that yield scalable and energy-efficient algorithms and by processing sensor signals that arise from different observation models. In MDMT systems, the devices cannot generally achieve the centralized solution, which corresponds to solving their SP tasks as if they had access to all sensor signals of the network. Thus, the in-network processing rules cannot usually be designed by following a top-down approach, which consists in distributing the processing of a single network-wide SP task among a set of dedicated devices. Instead, the in-network processing rules could be based on a bottom-up approach where the devices collaborate to attain superior performance as compared to the case where they solve their tasks on their own, without necessarily aiming for centralized optimality. These bottom-up approaches could then be benchmarked against offline or coordinated algorithms that achieve Pareto-optimal solutions under the available communication resources.

B. Heterogeneous observation models

Most of the algorithms for node-specific signal estimation (NSSE) assume that all the devices observe all latent sources and that all the node-specific desired signals span the same latent signal subspace, i.e., consist of different spatial weighting of the different sources. However, in many heterogeneous and multi-task WSNs, these two assumptions are not verified. For instance, due to the attenuation of the signal when it propagates through the medium, the sensor signals of the devices may arise from observation models that depend on different sets of latent sources. In this setting, it has been shown that most of these NSSE algorithms cannot attain the corresponding centralized solution [7]. Motivated by this fact, [8] proposes a distributed NSSE algorithm to attain the centralized performance over a setting where any of the two aforementioned assumptions may not hold. Nonetheless, this algorithm is suboptimal with respect to the number of signals that each device has to broadcast to let all the devices attain the centralized performance. As a result, extra research efforts are needed to derive theoretical compression bounds and to design distributed NSSE algorithms based on in-network processing rules that apply higher compression rates and still attain the centralized solution of the NSSE problems.

Unlike the distributed algorithms for NSSE, most of the distributed algorithms for NSPE assume that the sensor signals depend on different overlapping sets of parameter vectors. However, there exist very few results that study the convergence of the different NSPE algorithms when some of their working assumptions are not met. Within this category, the authors in [51] characterize the convergence point of the

single-task diffusion LMS algorithm [59] when it is applied in a multi-task environment. In particular, it is shown that the diffusion LMS algorithm [59] converges to a Pareto-optimal solution for the multi-objective cost function corresponding to a distributed estimation problem where the local cost function of each device $J_k(\cdot)$ has a different minimizer. On the contrary, it is rather unclear which is the convergence point of other existing NSPE algorithms when some working conditions are not met. For instance, the convergence point of the diffusion-based NSPE algorithm [38] is unknown when the devices intentionally or erroneously fuse local estimates associated with different vector of parameters. Since many other NSPE algorithms may be employed numerous applications (see Section II), notice that many other similar convergence studies will be of great value to fully characterize the performance limits in these applications.

C. Basic principles of cooperation in multi-task WSNs

Unlike in most systems, the devices in an MDMT system may have competing interests, e.g., a source may be desired for one device, but at the same time an interferer for another device. As a result, game theoretical tools should also be employed to stimulate cooperation among devices or players with competing interests. Furthermore, since some devices might be selfish and malicious, trust schemes based on game theory should be implemented to disallow selfish and malicious behaviour.

To stimulate the cooperation among devices of different types, (i.e., honest, selfish or malicious), both coalitional and non-cooperative game theory can be employed. Coalitional game theory seeks for optimal coalition structures of players in order to optimize the utility of each coalition. Coalitional game models have been employed in wireless networks, but in most cases from a layered perspective. In particular, coalitional games have been used to model MAC schemes in wireless networks, to obtain solutions for resource allocation, power control, and to stimulate cooperation amongst devices [63]-[65]. In the context of distributed and adaptive in-network processing, most studies have focused mainly, although not exclusively, on game theoretical approaches based on non-cooperative game theory, which stimulate cooperation among single agents by employing reputation mechanisms where an agent's action history is summarized into a single value, referred to as reputation [66]-[68]. However, such studies have been carried out under major restrictive assumptions. Some common assumptions are that the network is slowly varying (or static), that perfect/complete information is available about the actions of other players and that the players are fully rational, show either honest or selfish behaviour and are interested in the same SP task. Due to these assumptions, the applicability of the existing results in MDMT systems is rather limited. Under non-cooperative game theory, a recent work [69] has considered settings with imperfect information about the action of the players and where the players can exhibit a malicious behaviour. Furthermore, some other works have performed a coalitional game analysis for distributed in-network processing over adaptive and multi-task WSNs [70]-[71]. In spite of these recent results, the application of game theory in the context of MDMT systems is still in its infancy, and many critical problems remain to be solved.

D. Distributed multi-source detection and labeling

In multi-task WSNs, the sensor signals typically arise from multi-source observation models. As a result, to let the devices collaborate with each other and, e.g., improve the estimation of their node-specific desired signals or parameters, distributed labeling and detection algorithms should be developed in order to detect and identify the sources (signals or parameters) of interest for the different devices. For instance, a multi-source voice activity detection (VAD) algorithm that simultaneously detects and identifies the activity pattern of different speech signals present in an acoustic scenario [2]-[3]. Furthermore, the devices should agree on a specific label for each source in order to communicate to each other which sources they are (not) interested in.

By relying on the mature field of information theory and pattern recognition, the design and analysis of distributed detection schemes has been extensively undertaken for single-task WSNs where all devices cooperate to detect one single source (see e.g., [72]-[75]). However, very little is known about their extension to multi-task WSNs. In contrast to the binary nature of the distributed detection algorithms that operate over single-task networks, multi-task WSNs require a framework for multi-source detection instead, which is significantly more challenging. Indeed, since the source to be detected by one device can act as an interferer for the detection of another source in another device, in a multi-task network the devices have different but inter-related detection problems that need to be simultaneously and cooperatively solved. Furthermore, since it is required to distinguish between two (possibly simultaneous) source detections, it is of paramount important to also design distributed labeling schemes that assign a network-wide label to each source. One popular approach consist in identifying the sources from low-complexity features. For instance, based on diffusion-like classification techniques such as K-means, expectation maximization etc., several distributed algorithms [76]-[80] have been proposed to process source-specific features and solve the multi-source labeling problem in multi-task WSNs in an audio/video context. Nevertheless, further studies are still required to obtain robust distributed labeling algorithms that can operate in adverse scenarios where, e.g., the noise can deviate from a nominal environment or where the noise statistics can be completely unknown.

E. Communication and privacy constraints

In an MDMT system, the most expensive part of the cooperation among the devices is usually the data communications through wireless links. This is especially emphasized if the devices have to share multimedia signals. which typically have high data rate. Hence, the cooperation among the devices is often subject to some communication constraints. As a result, it is of great value to design distributed schemes whose in-network processing rules allow to reduce the communication

without significantly compromising the benefits of cooperation.

Based on different techniques such as partial updating, dictionary learning, censoring or quantization, some distributed schemes have been designed to trade-off estimation accuracy and energy consumption of the devices for single-task networks where all the devices are interested in the same SP problem [81]-[87]. Furthermore, a few works have extended the previous techniques to multi-task WSNs solving different distributed node-specific signal and parameter estimation problems, [41], [88]-[90]. Nonetheless, besides extending these schemes to other MDMT algorithms, further research is required to solve several open problems associated with the multi-task context. For instance, in heterogeneous and multi-task WSNs, a device could have multiple (signal or parameter) estimation interests. In this setting, based on heuristics or theoretically motivated rules, some novel mechanisms need to be integrated into the distributed node-specific estimation algorithms in order to let each device determine in which tasks the cooperation needs to be reduced at the expense of some performance degradation. Additionally, since devices

Besides communication constraints, in the context of some monitoring applications such as PSSE [28] or data mining tasks over social networks [91], the cooperation among the devices can also have some privacy constraints on the collected and shared information. To ensure these privacy constraints, each device will aim at protecting its private data so that other devices cannot reconstruct it [92]. Currently, for both the signal and parameter estimation case, there exist techniques that can be integrated into the in-network processing rules of different algorithms to let the devices cooperate with each other while preserving the privacy in the exchanged data (e.g., see [93]-[96]). However, most of them assume a single-task setting. In a multi-task WSN, one of the very few attempts preserving some privacy can be found in the algorithms proposed in [28] and [35]-[38]. These algorithms can achieve better performance than the corresponding non-cooperative solutions when solving the different parameter estimation tasks, which can be of global, common or local interest depending on the area of influence of the corresponding phenomena. However, to do so, the proposed algorithms do not require the devices to exchange the estimates associated with the vectors of local parameters, which can be considered as private. Nevertheless, in other multi-task WSNs, there can be privacy constraints on the information that the devices need to share in order to enhance or even solve their different signal or parameter tasks. As a result, further studies need to be undertaken to integrate some of the privacy preserving techniques into the novel distributed algorithms for multi-task WSNs.

F. Bayesian filtering techniques for heterogeneous and multi-task networks

To solve distributed estimation problems over multi-task WSNs, the design of the existing algorithms has mainly relied on low-complexity linear estimation techniques (see Table I). However, in many of the inference problems that arise in these networks (e.g. tracking of multiple targets from power measurements), the sensor signals of a device are not linearly related to its signal or parameter estimation interests. Additionally, as usually happens in the context of big data, the relationship between the sensor signals and the variables (signals or parameters) of interest cannot be easily parametrized. In this setting, the distributed algorithms based on linear estimation techniques or a parametric model can experience a strong performance degradation. To avoid this, the design of more general distributed algorithms is needed. Bridging this gap, a diffusion-based Bayesian filtering method [97] and a cooperative Markov chain Monte Carlo (MCMC) algorithm [98] have been recently proposed to solve a NSPE problem where each device is simultaneously interested in estimating two parameter vectors, one of local interest and another of global interest. Nonetheless, very little is still known about the multi-task extension of the many parallel MCMC, sequential Monte Carlo or variational filtering methods (e.g., [99]-[104]) that were designed for single-task WSNs where all the devices have the same estimation interest. Nevertheless, taking into account that these novel algorithms constitute one of the key elements for the future development of multi-task SP, further research efforts are expected.

G. Other challenges

In addition to the previous challenges, the design of applications for heterogeneous and multi-task WSNs requires to address some general problems that are also present in the traditional single-task WSNs. Among them, possibly the three most relevant problems are described in the following

1) Non-linear and/or non-parametric models: To solve distributed estimation problems over multi-task WSNs, the design of the existing algorithms has mainly relied on low-complexity linear estimation techniques (see Table I). However, in many of the inference problems that arise in these networks (e.g. tracking of multiple targets from power measurements), the sensor signals of a device are not linearly related to its signal or parameter estimation interests. Additionally, as usually happens in the context of big data, the relationship between the sensor signals and the variables (signals or parameters) of interest cannot be easily parametrized. In this setting, the distributed algorithms based on linear estimation techniques or a parametric model can experience a strong performance degradation. To avoid this, the design of more general distributed algorithms is needed. Bridging this gap, a diffusion-based Bayesian filtering method [97] and a cooperative MCMC algorithm [98] have been recently proposed to solve a NSPE problem where each device is simultaneously interested in estimating two parameter vectors, one of local interest and another of global interest. Nonetheless, very little is still known about the multi-task extension of the many parallel MCMC, sequential Monte Carlo or variational filtering methods (e.g., [99]-[104]) that were designed for single-task WSNs where all the devices have the same estimation interest. Nevertheless, taking into account that these novel algorithms constitute one of the key elements for the future development of multi-task SP, further research efforts are expected.

2) Topology inference and control: Heterogeneous multi-task WSNs generally consist of many heterogeneous devices with an a priori unknown ad-hoc topology where the position of the devices is not known. However, their performance is highly dependent on the topology of the network [105], [106], even more so than in traditional single-task networks. As a result, distributed algorithms for *topology inference and control* are of paramount importance, e.g., to identify topological opportunities that enhance the performance of the distributed algorithms designed for MDMT systems.

3) Synchronization: In a heterogeneous ad-hoc WSN, devices operate at different nominal sampling rates and have local clocks. Even devices with the same nominal sampling rate may sample at slightly different rates due to imperfections in the local clocks. As a result, there will be *sampling rate mismatches* between sensor and exchanged signals, which may significantly affect the performance of coherent SP techniques as used in many traditional distributed estimation and detection algorithms. Although there already exist several compensation algorithms (see e.g., [107], [108] and references therein), further research is needed. In particular, the integration of these algorithms into the different distributed node-specific algorithms for signal or parameter estimation is still an open problem.

V. Conclusions

In this paper, we have described some applications that can benefit significantly from using heterogeneous and multi-task WSNs where multiple heterogeneous devices cooperate to simultaneously solve different signal processing tasks. Moreover, we have given a general overview of the state-of-the-art and discussed remaining open problems related to the design of distributed signal processing techniques for node-specific signal or parameter estimation over heterogeneous and multi-task WSNs. Finally, we have examined the main challenges that need to be addressed when designing a heterogeneous and multi-task WSN.

References

[1] H. Dillon, *Hearing aids*. Boomerang press Sydney, 2001, vol. 362.

[2] A. Bertrand and M. Moonen, "Robust distributed noise reduction in hearing aids with external acoustic sensor nodes," *EURASIP Journal on Advances in Signal Processing*, vol. 2009, p. 12, 2009.

[3] ——, "Distributed adaptive node-specific signal estimation in fully connected sensor networks - part I: Sequential node updating," *IEEE Transactions on Signal Processing*, vol. 58, no. 10, pp. 5277–5291, 2010.

[4] ——, "Distributed adaptive node-specific signal estimation in fully connected sensor networks - part II: Simultaneous and asynchronous node updating," *IEEE Transactions on Signal Processing*, vol. 58, no. 10, pp. 5292–5306, 2010.

[5] ——, "Distributed adaptive estimation of node-specific signals in wireless sensor networks with a tree topology," *IEEE Transactions on Signal Processing*, vol. 59, no. 5, pp. 2196–2210, 2011.

[6] ——, "Distributed node-specific LCMV beamforming in wireless sensor networks," *IEEE Transactions on Signal Processing*, vol. 60, no. 1, pp. 233–246, 2012.

[7] ——, "Distributed signal estimation in sensor networks where nodes have different interests," *Signal Processing*, vol. 92, no. 7, pp. 1679–1690, 2012.

[8] J. Plata-Chaves, A. Bertrand, and M. Moonen, "Distributed signal estimation in a wireless sensor network with partially-overlapping node-specific interests or source observability," in *IEEE 40th International Conference on Acoustics, Speech and Signal Processing, 2015. ICASSP 2015*, 2015.

[9] S. C. Park, M. K. Park, and M. G. Kang, "Super-resolution image reconstruction: a technical overview," *IEEE Signal Processing Magazine*, vol. 20, no. 3, pp. 21–36, 2003.

[10] P. Vandewalle, "Super-resolution from unregistered aliased images," Ph.D. dissertation, Ecole Polytechnique Fédérale de Lausanne, Switzerland, 2006.

[11] B. Bejar and M. Vetterli, "Enhancing local-transmitting less-improving global," in *IEEE International Conference on Acoustics, Speech and Signal Processing, 2015. ICASSP 2015*, 2015, pp. 5798–5802.

[12] S. J. Elliott, I. M. Stothers, and P. A. Nelson, "A multiple error LMS algorithm and its application to the active control of sound and vibration," *IEEE Transactions on Acoustics, Speech and Signal Processing*, vol. 35, no. 10, pp. 1423–1434, 1987.

[13] M. Ferrer, M. de Diego, G. Piñero, and A. Gonzalez, "Active noise control over adaptive distributed networks," *Signal Processing*, vol. 107, pp. 82–95, 2015.

[14] C. Antoñanzas, M. Ferrer, A. Gonzalez, M. de Diego, and G. Piñero, "Diffusion algorithm for active noise control in distributed networks," in *22nd International Congress on Sound and Vibration, 2015. ICSV22*, 2015.

[15] J. Lorente, C. Antonanzas, M. Ferrer, and A. Gonzalez, "Block-based distributed adaptive filter for active noise control in a collaborative network," in *IEEE 23rd European Signal Conference, 2015. EUSIPCO 2015*, 2015, pp. 310–314.

[16] J. Plata-Chaves, A. Bertrand, and M. Moonen, "Incremental multiple error filtered-x LMS for node-specific active noise control over wireless acoustic sensor networks," in *IEEE 9th Sensor Array and Multichannel Signal Processing Workshop, 2016. SAM 2016*, 2016.

[17] J. A. Bazerque and G. B. Giannakis, "Distributed spectrum sensing for cognitive radio networks by exploiting sparsity," *IEEE Transactions on Signal Processing*, vol. 58, no. 3, pp. 1847–1862, 2010.

[18] A. H. Sayed, "Diffusion adaptation over networks," *To appear in E-Reference Signal Processing, R. Chellapa and S. Theodoridis, Eds., Elsevier, 2013*, 2012 [Online]. Available: http://arxiv.org/abs/1205.4220.

[19] P. Di Lorenzo, S. Barbarossa, and A. H. Sayed, "Distributed spectrum estimation for small cell networks based on sparse diffusion adaptation," *IEEE Signal Processing Letters*, vol. 20, no. 12, pp. 1261–1265, 2013.

[20] ——, "Bio-inspired decentralized radio access based on swarming mechanisms over adaptive networks," *IEEE Transactions on Signal Processing*, vol. 61, no. 12, pp. 3183–3197, 2013.

[21] S. Iwamoto, M. Kusano, and V. H. Quintana, "Hierarchical state estimation using a fast rectangular-coordinate method," *IEEE Transactions on Power Systems*, vol. 4, no. 3, pp. 870–880, 1989.

[22] R. Ebrahimian and R. Baldick, "State estimation distributed processing," *IEEE Transactions on Power Systems*, vol. 15, no. 4, pp. 1240–1246, 2000.

[23] L. Zhao and A. Abur, "Multi area state estimation using synchronized phasor measurements," *IEEE Transactions on Power Systems*, vol. 20, no. 2, pp. 611–617, 2005.

[24] A. Gómez-Expósito, A. Abur, A. De La Villa Jaén, and C. Gómez-Quiles, "A multilevel state estimation paradigm for smart grids," *Proceedings of the IEEE*, vol. 99, no. 6, pp. 952–976, 2011.

[25] G. N. Korres, "A distributed multiarea state estimation," *IEEE Transactions on Power Systems*, vol. 26, no. 1, pp. 73–84, 2011.

[26] T. Van Cutsem, L. Horward, and M. Ribbens-Pavella, "A two-level static state estimator for electric power systems," *IEEE Transactions on Power Apparatus and Systems*, no. 8, pp. 3722–3732, 1981.

[27] Y. Mo, T. H.-J. Kim, K. Brancik, D. Dickinson, H. Lee, A. Perrig, and B. Sinopoli, "Cyber–physical security of a smart grid infrastructure," *Proceedings of the IEEE*, vol. 100, no. 1, pp. 195–209, 2012.

[28] V. Kekatos and G. B. Giannakis, "Distributed robust power system state estimation," *IEEE Transactions on Power Systems*, vol. 28, no. 2, pp. 1617–1626, 2013.

[29] X. Li and A. Scaglione, "Robust decentralized state estimation and tracking for power systems via network gossiping," *IEEE Journal on Selected Areas in Communications*, vol. 31, no. 7, pp. 1184–1194, 2013.

[30] A. Hassani, J. Plata-Chaves, A. Bertrand, and M. Moonen, "Multi-task wireless acoustic sensor network for node-specific speech enhancement and doa estimation," in *IEEE 9th Sensor Array and Multichannel Signal Processing Workshop, 2016. SAM 2016*, 2016.

[31] S. Markovich-Golan, A. Bertrand, M. Moonen, and S. Gannot, "Optimal distributed minimum-variance beamforming approaches for speech enhancement in wireless acoustic sensor networks," *Signal Processing*, vol. 107, pp. 4–20, 2015.

[32] A. Hassani, A. Bertrand, and M. Moonen, "GEVD-based low-rank approximation for distributed adaptive node-specific signal estimation in wireless sensor networks," *IEEE Transactions on Signal Processing*, vol. 64, no. 10, pp. 2557–2572, 2016.

[33] J. Szurley, A. Bertrand, and M. Moonen, "Distributed adaptive node-specific signal estimation in heterogeneous and mixed-topology wireless sensor networks," *Signal Processing*, vol. 117, no. 12, pp. 44–60, 2015.

[34] ——, "Topology-independent distributed adaptive node-specific signal estimation in wireless sensor networks," *Submitted to IEEE Transactions on Signal Processing*, 2015.

[35] N. Bogdanovic, J. Plata-Chaves, and K. Berberidis, "Distributed incremental-based LMS for node-specific adaptive parameter estimation," *IEEE Transactions on Signal Processing*, vol. 62, no. 20, pp. 5382–5397, 2014.

[36] J. Plata-Chaves, N. Bogdanovic, and K. Berberidis, "Distributed incremental-based RLS for node-specific parameter estimation over adaptive networks," in *IEEE 21st European Signal Conference, 2013. EUSIPCO 2013*, 2013.

[37] N. Kashyap, S. Werner, and Y. Huang, "Decentralized power system state estimation with reduced inter-area communication," in *IEEE 20th International Conference on Digital Signal Processing, 2015. DSP 2015*, 2015, pp. 14–18.

[38] J. Plata-Chaves, N. Bogdanovic, and K. Berberidis, "Distributed diffusion-based LMS for node-specific parameter estimation over adaptive networks," *IEEE Transactions on Signal Processing*, vol. 13, no. 63, pp. 3448–3460, 2015.

[39] J. Chen, C. Richard, and A. H. Sayed, "Multitask diffusion adaptation over networks," *IEEE Transactions on Signal Processing*, vol. 62, no. 16, pp. 4129–4144, 2014.

[40] V. C. Gogineni and M. Chakraborty, "Diffusion adaptation over clustered multitask networks based on the affine projection algorithm," 2015 [Online]. Available: http://arxiv.org/abs/1507.08566.

[41] ——, "Distributed multi-task APA over adaptive networks based on partial diffusion," 2015 [Online]. Available: http://arxiv.org/abs/1509.09157.

[42] R. Nassif, C. Richard, A. Ferrari, and A. H. Sayed, "Multitask diffusion adaptation over asynchronous networks," *IEEE Transactions on Signal Processing*, vol. 64, no. 11, pp. 2835–2850, 2016.

[43] R. Nassif, C. Richard, J. Chen, A. Ferrari, and A. H. Sayed, "Diffusion LMS over multitask networks with noisy links," in *IEEE International Conference on Acoustics, Speech and Signal Processing, 2016. ICASSP 2016*, 2016, pp. 4583–4587.

[44] Y. Wang, W. P. Tay, and W. Wu, "Multitask diffusion LMS with optimized inter-cluster cooperation," in *IEEE/SP 19th Workshop on Statistical Signal Processing, 2016. SSP 2016*, 2016.

[45] R. Nassif, C. Richard, A. Ferrari, and A. H. Sayed, "Proximal multitask learning over networks with sparsity-inducing coregularization," *Submitted to IEEE Transactions on Signal Processing*, 2015 [Online]. Available: http://arxiv.org/abs/1509.01360.

[46] J. Chen, C. Richard, and A. H. Sayed, "Diffusion LMS over multitask networks," *IEEE Transactions on Signal Processing*, vol. 63, no. 11, pp. 2733–2748, 2015.

[47] X. Zhao and A. H. Sayed, "Clustering via diffusion adaptation over networks," in *3rd International Workshop on Cognitive Information Processing, 2012. CIP 2012*, 2012, pp. 1–6.

[48] ——, "Distributed clustering and learning over networks," *IEEE Transactions on Signal Processing*, vol. 63, no. 13, pp. 3285–3300, 2015.

[49] J. Chen, C. Richard, and A. H. Sayed, "Adaptive clustering for multitask diffusion networks," in *IEEE 23rd European Signal Conference, 2015. EUSIPCO 2015*, 2015, pp. 2746–2750.

[50] S. Khawatmi, A. M. Zoubir, and S. A. H., "Decentralized clustering over adaptive networks," in *IEEE 23rd European Signal Conference, 2015. EUSIPCO 2015*, 2015, pp. 2746–2750.

[51] J. Chen and A. H. Sayed, "Distributed pareto optimization via diffusion strategies," *IEEE Journal of Selected Topics in Signal Processing*, vol. 7, no. 2, pp. 205–220, 2013.

[52] J. Plata-Chaves, M. H. Bahari, M. Moonen, and A. Bertrand, "Unsupervised diffusion-based LMS for node-specific parameter estimation over wireless sensor networks," in *IEEE 41th International Conference on Acoustics, Speech and Signal Processing, 2016. ICASSP 2016*, 2016.

[53] J. Chen, S. K. Ting, C. Richard, and A. H. Sayed, "Group diffusion LMS," in *IEEE 41th International Conference on Acoustics, Speech and Signal Processing, 2016. ICASSP 2016*, 2016.

[54] R. Nassif, C. Richard, A. Ferrari, and A. H. Sayed, "Multitask diffusion LMS with sparsity-based regularization," in *IEEE International Conference on Acoustics, Speech and Signal Processing, 2015. ICASSP 2015*, 2015, pp. 3516–3520.

[55] S. M. Golan, S. Gannot, and I. Cohen, "A reduced bandwidth binaural MVDR beamformer," in *9th International Workshop on Acoustic Echo and Noise Control, 2010. IWAENC 2010*, 2010.

[56] G. Mateos, I. D. Schizas, and G. B. Giannakis, "Distributed recursive least-squares for consensus-based in-network adaptive estimation," *IEEE Transactions on Signal Processing*, vol. 57, no. 11, pp. 4583–4588, 2009.

[57] A. G. Dimakis, S. Kar, J. M. F. Moura, M. G. Rabbat, and A. Scaglione, "Gossip algorithms for distributed signal processing," *Proceedings of the IEEE*, vol. 98, no. 11, pp. 1847–1864, 2010.

[58] C. G. Lopes and A. H. Sayed, "Incremental adaptive strategies over distributed networks," *IEEE Transactions on Signal Processing*, vol. 55, no. 8, pp. 4064–4077, 2007.

[59] F. S. Cattivelli and A. H. Sayed, "Diffusion LMS strategies for distributed estimation," *IEEE Transactions on Signal Processing*, vol. 58, no. 3, pp. 1035–1048, 2010.

[60] S. Chouvardas, K. Slavakis, and S. Theodoridis, "Adaptive robust distributed learning in diffusion sensor networks," *IEEE Transactions on Signal Processing*, vol. 59, no. 10, pp. 4692–4707, 2011.

[61] S. Theodoridis, *Machine learning: a Bayesian and optimization perspective*. Academic Press, 2015.

[62] J. Chen and A. H. Sayed, "Distributed Pareto-optimal solutions via diffusion adaptation," in *IEEE Statistical Signal Processing Workshop, 2012. SSP 2012.*, 2012, pp. 648–651.

[63] W. Saad, Z. Han, M. Debbah, A. Hjørungnes, and T. Başar, "Coalitional game theory for communication networks," *IEEE Signal Processing Magazine*, vol. 26, no. 5, pp. 77–97, 2009.

[64] Z. Han and H. V. Poor, "Coalition games with cooperative transmission: a cure for the curse of boundary nodes in selfish packet-forwarding wireless networks," *IEEE Transactions on Communications*, vol. 57, no. 1, pp. 203–213, 2009.

[65] K. Akkarajitsakul, E. Hossain, D. Niyato, and D. I. Kim, "Game theoretic approaches for multiple access in wireless networks: A survey," *IEEE Communications Surveys & Tutorials*, vol. 13, no. 3, pp. 372–395, 2011.

[66] C.-K. Yu, M. van der Schaar, and A. H. Sayed, "Cluster formation over adaptive networks with selfish agents," in *IEEE 21st European Signal Conference, 2011. EUSIPCO 2011*, 2013, pp. 1–5.

[67] ——, "Reputation design for adaptive networks with selfish agents," in *IEEE 14th Workshop on Signal Processing Advances in Wireless Communications, 2013. SPAWC 2013*, 2013.

[68] C.-K. Yu, C.-K. van der Schaar, and A. H. Sayed, "Information-sharing over adaptive networks with self-interested agents," *IEEE Transactions on Signal and Information Processing over Networks*, vol. 1, no. 1, pp. 2–19, 2015.

[69] K. Ntemos, N. Kalouptsidis, and N. Kolokotronis, "Managing trust in diffusion adaptive networks with malicious agents," in *IEEE 23rd European Signal Conference, 2015. EUSIPCO 2015*, 2015, pp. 91–95.

[70] N. Bogdanovic, D. Ampeliotis, and K. Berberidis, "Coalitional game theoretic approach to distributed adaptive parameter estimation," in *IEEE International Conference on Acoustics, Speech and Signal Processing, 2015. ICASSP 2015*, 2015, pp. 5793–5797.

[71] D. Ampeliotis, N. Bogdanovic, and K. Berberidis, "Coalitional games for a distributed signal enhancement application," in *IEEE 23rd European Signal Conference, 2015. EUSIPCO 2015*, 2015, pp. 1885–1889.

[72] F. S. Cattivelli and A. H. Sayed, "Distributed detection over adaptive networks using diffusion adaptation," *IEEE Transactions on Signal Processing*, vol. 59, no. 5, pp. 1917–1932, 2011.

[73] D. Bajović, D. Jakovetić, J. Xavier, B. Sinopoli, and J. M. Moura, "Distributed detection via gaussian running consensus: Large deviations asymptotic analysis," *IEEE Transactions on Signal Processing*, vol. 59, no. 9, pp. 4381–4396, 2011.

[74] J.-W. Lee, S.-E. Kim, W.-J. Song, and A. H. Sayed, "Spatio-temporal diffusion strategies for estimation and detection over networks," *IEEE Transactions on Signal Processing*, vol. 60, no. 8, pp. 4017–4034, 2012.

[75] S. Al-Sayed, A. M. Zoubir, and A. H. Sayed, "Robust distributed detection over adaptive diffusion networks," in *IEEE 39th International Conference on Acoustics, Speech and Signal Processing, 2014. ICASSP 2014*, 2014, pp. 7233–7237.

[76] P. Binder, M. Muma, and A. M. Zoubir, "Robust and computationally efficient diffusion-based classification in distributed networks," in *IEEE 40th International Conference on Acoustics, Speech and Signal Processing, 2015. ICASSP 2015*, 2015, pp. 3432–3436.

[77] S. Chouvardas, M. Muma, K. Hamaidi, S. Theodoridis, and A. M. Zoubir, "Distributed robust labeling of audio sources in heterogeneous wireless sensor networks," in *IEEE 40th International Conference on Acoustics, Speech and Signal Processing, 2015. ICASSP 2015*, 2015, pp. 5783–5787.

[78] F. K. Teklehaymanot, M. Muma, B. Béjar, P. Binder, A. M. Zoubir, and M. Vetterli, "Robust diffusion-based unsupervised object labeling in distributed camera networks," in *AFRICON, 2015*, 2015, pp. 1–6.

[79] M. H. Bahari, J. Plata-Chaves, M. Moonen, and A. Bertrand, "Distributed labeling of audio sources in wireless acoustic sensor networks using consensus and matching," in *IEEE 24th European Signal Conference, 2016. EUSIPCO 2016*, 2016.

[80] P. Binder, M. Muma, and A. M. Zoubir, "Robust and adaptive diffusion-based classification in distributed networks," *EURASIP Journal on Advances in Signal Processing*, vol. 2016, no. 1, pp. 1–13, 2016.

[81] A. Bertrand, J. Szurley, P. Ruckebusch, I. Moerman, and M. Moonen, "Efficient calculation of sensor utility and sensor removal in wireless sensor networks for adaptive signal estimation and beamforming," *IEEE Transactions on Signal Processing*, vol. 60, no. 11, pp. 5857–5869, 2012.

[82] M. O. Sayin and S. S. Kozat, "Single bit and reduced dimension diffusion strategies over distributed networks," *IEEE Signal Processing Letters*, vol. 20, no. 10, pp. 976–979, 2013.

[83] S. Chouvardas, K. Slavakis, and S. Theodoridis, "Trading off complexity with communication costs in distributed adaptive learning via krylov subspaces for dimensionality reduction," *IEEE Journal of Selected Topics in Signal Processing*, vol. 7, no. 2, pp. 257–273, 2013.

[84] P. Chainais and C. Richard, "Learning a common dictionary over a sensor network," in *IEEE 5th International Workshop on Computational Advances in Multi-Sensor Adaptive Processing, 2013. CAMSAP 2013*, 2013, pp. 133–136.

[85] R. Arablouei, K. Dogancay, S. Werner, and Y.-F. Huang, "Adaptive distributed estimation based on recursive least-squares and partial diffusion," *IEEE Transactions on Signal Processing*, vol. 62, no. 14, pp. 3510–3522, 2014.

[86] M. O. Sayin and S. S. Kozat, "Compressive diffusion strategies over distributed networks for reduced communication load," *IEEE Transactions on Signal Processing*, vol. 62, no. 20, pp. 5308–5323, 2014.

[87] R. Arablouei, S. Werner, Y.-. Huang, and K. Dogancay, "Distributed least mean-square estimation with partial diffusion," *IEEE Transactions on Signal Processing*, vol. 62, no. 2, pp. 472–484, 2014.

[88] F. de la Hucha Arce, F. Rosas, M. Moonen, M. Verhelst, and A. Bertrand, "Energy-vs-performance trade-offs in speech enhancement in wireless acoustic sensor networks," in *IEEE 23rd European Signal Conference, 2015. EUSIPCO 2015*, 2015, pp. 1561–1565.

[89] J. Szurley, A. Bertrand, P. Ruckebusch, I. Moerman, and M. Moonen, "Greedy distributed node selection for node-specific signal estimation in wireless sensor networks," *Signal Processing*, vol. 94, pp. 57–73, 2014.

[90] D. Ampeliotis, C. Mavrokefalidis, K. Berberidis, and S. Theodoridis, "Adapt-Align-Combine for diffusion-based distributed dictionary learning," in *IEEE 24th European Signal Conference, 2016. EUSIPCO 2016*, 2016.

[91] N. Ramakrishnan, B. J. Keller, B. J. Mirza, A. Y. Grama, and G. Karypis, "Privacy risks in recommender systems," *IEEE Internet Computing*, vol. 5, no. 6, p. 54, 2001.

[92] R. Agrawal and R. Srikant, "Privacy-preserving data mining," in *ACM Sigmod Record*, vol. 29, no. 2, 2000, pp. 439–450.

[93] R. C. Hendriks, Z. Erkin, and T. Gerkmann, "Privacy-preserving distributed speech enhancement forwireless sensor networks by processing in the encrypted domain," in *IEEE International Conference on Acoustics, Speech and Signal Processing, 2012. ICASSP 2012*, 2013, pp. 7005–7009.

[94] ——, "Privacy preserving distributed beamforming based on homomorphic encryption," in *IEEE 23rd European Signal Conference, 2015. EUSIPCO 2015*, 2013, pp. 1–5.

[95] Y. Zeng and R. C. Hendriks, "Distributed estimation of the inverse of the correlation matrix for privacy preserving beamforming," *Signal Processing*, vol. 107, pp. 109–122, 2015.

[96] I. E. K. Harrane, R. Flamary, and C. Richard, "Toward privacy-preserving diffusion strategies for adaptation and learning over networks," in *IEEE 24th European Signal Conference, 2016. EUSIPCO 2016*, 2016.

[97] K. Dedecius and V. Sečkárová, "Diffusion estimation of mixture models with local and global parameters," in *IEEE/SP 19th Workshop on Statistical Signal Processing, 2016. SSP 2016*, 2016.

[98] M. Martino, J. Plata-Chaves, and F. Louzada, "A Monte Carlo scheme for node-specific inference over wireless sensor networks," in *IEEE 9th Sensor Array and Multichannel Signal Processing Workshop, 2016. SAM 2016*, 2016.

[99] A. Jasra, D. A. Stephens, and C. C. Holmes, "Population-based reversible jump markov chain monte carlo," *Biometrika*, vol. 94, no. 4, pp. 787–807, 2007.

[100] F. S. Cattivelli and A. H. Sayed, "Diffusion strategies for distributed Kalman filtering and smoothing," *IEEE Transactions on Automatic Control*, vol. 55, no. 9, pp. 2069–2084, 2010.

[101] D. Luengo, L. Martino, V. Elvira, and M. Bugallo, "Efficient linear combination of partial Monte Carlo estimators," in *IEEE International Conference on Acoustics, Speech and Signal Processing, 2015. ICASSP 2015*, 2015, pp. 4100–4104.

[102] K. Dedecius, J. Reichl, and P. M. Djuric, "Sequential estimation of mixtures in diffusion networks." *IEEE Signal Processing Letters*, vol. 22, no. 2, pp. 197–201, 2015.

[103] K. Dedecius and P. M. Djuric, "Diffusion filtration with approximate Bayesian computation," in *IEEE International Conference on Acoustics, Speech and Signal Processing, 2015. ICASSP 2015*, 2015, pp. 3207–3211.

[104] L. Martino, V. Elvira, D. Luengo, and J. Corander, "Layered adaptive importance sampling," 2015 [Online]. Available: http://arxiv.org/abs/1505.04732.

[105] A. H. Sayed, S.-Y. Tu, J. Chen, X. Zhao, and Z. J. Towfic, "Diffusion strategies for adaptation and learning over networks: an examination of distributed strategies and network behavior," *IEEE Signal Processing Magazine*, vol. 30, no. 3, pp. 155–171, 2013.

[106] A. Bertrand and M. Moonen, "Seeing the bigger picture: How nodes can learn their place within a complex ad hoc network topology," *IEEE Signal Processing Magazine*, vol. 30, no. 3, pp. 71–82, 2013.

[107] S. Markovich-Golan, S. Gannot, and I. Cohen, "Blind sampling rate offset estimation and compensation in wireless acoustic sensor networks with application to beamforming," in *IEEE International Workshop on Acoustic Signal Enhancement, 2012. IWAENC 2012*, 2012, pp. 1–4.

[108] M. H. Bahari, A. Bertrand, and M. Moonen, "Blind sampling rate offset estimation based on coherence drifft in wireless acoustic sensor networks," in *IEEE 23rd European Signal Conference, 2015. EUSIPCO 2015*, 2015, pp. 2281–2285.