Katholieke Universiteit Leuven

Departement Elektrotechniek ESAT-SISTA/TR 2002-22b

Feedback cancellation in hearing aids: an unbiased modelling approach. [1]

Ann Spriet[2], Marc Moonen[3] ,Ian Proudler[4]

published in *Proc. IEEE Benelux Workshop on Model based Processing and Coding of Audio (MPCA-2002), Leuven, Belgium, 15 november 2002, pp. 29-32*

[1]This report is available by anonymous ftp from *ftp.esat.kuleuven.ac.be* in the directory *pub/sista/spriet/reports/02-22b.pdf*

[2]K.U.Leuven, Dept. of Electrical Engineering (ESAT), SISTA, Kasteelpark Arenberg 10, 3001 Leuven-Heverlee, Belgium, Tel. 32/16/32 18 99, Fax 32/16/32 19 70, WWW: *http://www.esat.kuleuven.ac.be/sista*. E-mail: *ann.spriet@esat.kuleuven.ac.be*. K.U.Leuven, Lab. Exp. ORL, Dept. Neurowetenschappen, Kapucijnenvoer 33, 3000 Leuven, Belgium, Tel. 32/16/33 24 15, Fax 32/16/33 23 35, WWW: *http://www.kuleuven.ac.be/exporl/Lab/Default.htm*. Ann Spriet is a Research Assistant supported by the Fonds voor Wetenschappelijk Onderzoek (FWO) - Vlaanderen. This research work was carried out at the ESAT laboratory and Lab. Exp. ORL of the Katholieke Universiteit Leuven, in the framework of the Concerted Research Action GOA-MEFISTO-666 (Mathematical Engineering for Information and Communication Systems Technology) of the Flemish Government, IUAP P4-02 (1997-2001) 'Modeling, Identification, Simulation and Control of Complex Systems' and FWO Research Project nr. G.0233.1 ('Signal processing and automatic patient fitting for advanced auditory prostheses'). The scientific responsibility is assumed by its authors.

[3]K.U.Leuven, Dept. of Electrical Engineering (ESAT), SISTA, Kasteelpark Arenberg 10, 3001 Heverlee, Belgium, Tel. 32/16/32 17 09, Fax 32/16/32 19 70, WWW: *http://www.esat.kuleuven.ac.be/sista*. E-mail: *marc.moonen@esat.kuleuven.ac.be*. Marc Moonen is a professor at the Katholieke Universiteit Leuven.

[4]QinetiQ Ltd. Malvern Technology Centre, St Andrews Road, Malvern, Worcestershire, WR14 3PS, UK E-mail:*i.proudler@signal.QinetiQ.com*

FEEDBACK CANCELLATION IN HEARING AIDS: AN UNBIASED MODELLING APPROACH

Ann Spriet[1,2] *Marc Moonen*[1], *Ian Proudler*[3]

[1]Katholieke Universiteit Leuven-ESAT, Kasteelpark Arenberg 10, B-3001 Leuven-Heverlee, Belgium
e-mail:{spriet,moonen}@esat.kuleuven.ac.be
[2] Katholieke Universiteit. Leuven-Lab. Exp ORL, Kapucijnenvoer 33, B-3000 Leuven, Belgium
[3]QinetiQ Ltd., Malvern Technology Centre, St Andrews Road, Malvern, Worcestershire, WR14 3PS, UK
e-mail: i.proudler@signal.QinetiQ.com

ABSTRACT

In this paper, we present an unbiased, adaptive feedback cancellation system for hearing aids. The algorithm is based on a closed loop identification of the feedback path as well as the (linear prediction) model of the near-end input signal. In general, both models are not simultaneously identifiable in the closed loop system at hand. We show that -under certain conditions e.g. if a delay is inserted in the forward path- identification of both models is indeed possible. Simulation results demonstrate that -under these conditions- the unbiased modelling approach outperforms the biased continuous adaptation algorithm.

1. INTRODUCTION

Acoustic feedback, which is caused by leakage from the loudspeaker to the microphone, limits the maximum amplification that can be used in a hearing aid without instability. To increase the maximum gain, a feedback cancellation algorithm is used that estimates the feedback signal and subtracts it from the microphone signal. Since the acoustic path between the loudspeaker and the microphone can vary significantly depending on the acoustical environment, the feedback canceller must be adaptive.
Currently available adaptive feedback cancellers can be divided in to two classes: algorithms with a continuous adaptation and algorithms with a noncontinuous adaptation [1],[2]. The latter only adapt the filter when instability is detected or when the input signal level is low. Due to the reactive, rather than proactive, adaptation, these systems may be objectionable. A continuous adaptation scheme continuously adapts the filter coefficients of the filter $\hat{F}(z)$. This is depicted in **Figure 1**. Since the input signal $x[k]$ to the microphone is non-white and due to the forward path $G(z)$, $x[k]$ and the input $u[k]$ to the adaptive filter $\hat{F}(z)$ are correlated, generally causing a biased estimate $\hat{F}(z)$ of the feedback path $F(z)$ [3]. To reduce the correlation, delays are included in the forward path $G(z)$ or in the cancellation path (i.e. at the input of the adaptive filter $\hat{F}(z)$). The correlation can also be reduced by inserting a noise signal $r[k]$ at the input of the loudspeaker that is uncorrelated with $x[k]$ or by adding nonlinearities in the forward path $G(z)$ [4].

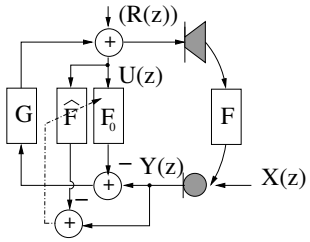

Figure 1: Concept of a (biased) adaptive feedback canceller.

Suppose that $X(z) = H(z)W(z)$, with $W(z)$ white noise and $H(z)$ monic and inversely stable. In [5], it is shown that the bias of the adaptive filter can be avoided by means of a filtered-X algorithm that minimizes the filtered error $H^{-1}(z)(Y(z) - \hat{F}(z)U(z))$, provided that $H(z)$ is known. The concept of the filtered-X algorithm is illustrated in **Figure 2**. In practice, $H^{-1}(z)$ is unknown and time varying. In addition, the performance of the filtered-X algorithm strongly depends on the quality of the estimate of $H^{-1}(z)$ so that it is desirable to estimate $H^{-1}(z)$ adaptively. In general though, $F(z)$ and $H^{-1}(z)$ are not identifiable in closed loop if $R(z) = 0$, $G(z)$ is linear and the filter $F_0(z)$ is fixed [5]. In this paper, we show that -under certain conditions- identification of both $H^{-1}(z)$ and $F(z)$ is indeed possible. In Section 2, the identification method is described. Section 3 derives the conditions under which the identification scheme has a unique optimal solution. In Section 4, the theory is verified through simulation.

2. CONCEPT

Consider the two-channel identification scheme depicted in **Figure 3** with adaptive FIR filters $A(z)$ and $B(z)$, with coefficient vectors $\mathbf{a}$ and $\mathbf{b}$ and filter lengths N_A and N_B, respectively. The two-channel adaptive filter minimizes $\frac{1}{N}\sum_{k=0}^{N-1} e_k^2$, with

$$e_k = \mathbf{b}^T\mathbf{u}_k + \mathbf{a}^T\mathbf{y}_k, \tag{1}$$

where $\mathbf{u}_k = \left[\begin{array}{cccc} u[k] & u[k-1] & \cdots & u[k-N_B-1] \end{array}\right]^T$ and $\mathbf{y}_k = \left[\begin{array}{cccc} y[k] & y[k-1] & \cdots & y[k-N_A-1] \end{array}\right]^T$. We would

Ann Spriet is a Research Assistant supported by the Fonds voor Wetenschappelijk Onderzoek (FWO) - Vlaanderen. This research work was carried out at the ESAT laboratory and Lab. Exp. ORL of the Katholieke Universiteit Leuven, in the framework of the Concerted Research Action GOA-MEFISTO-666 (Mathematical Engineering for information and Communication Systems Technology) of the Flemish Government, IUAP P4-02 (1997-2001) 'Modelling, Identification, Simulation And Control of Complex Systems' and FWO Research Project nr. G.0233.1 ('Signal processing and automatic patient fitting for advanced auditory protheses'). The scientific responsibility is assumed by its authors.

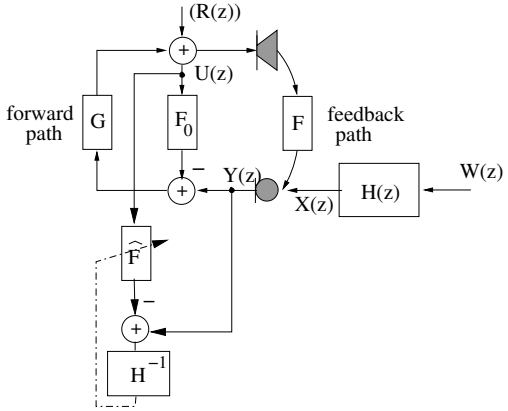

Figure 2: Filtered-X algorithm.

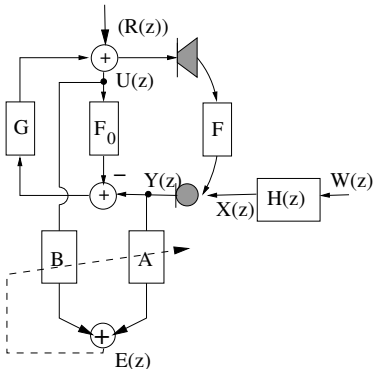

Figure 3: Two-channel identification scheme.

like the filter $B(z)$ to identify the product $-H^{-1}(z)F(z)$ and the filter $A(z)$ to identify $H^{-1}(z)$ such that $E(z)$ equals $W(z)$. To avoid the trivial solution $A(z) = B(z) = 0$, the first tap of $A(z)$ is set to 1: $A(z) = 1 + z^{-1}\bar{A}(z)$. In general, $x[k]$ is speech-like and a segment of $x[k]$ can be modelled by an all-pole model, so we assume

$$X(z) = H(z)W(z) = \frac{1}{1 + z^{-1}P(z)}W(z), \tag{2}$$

with $W(z)$ a white noise signal (in case of unvoiced sounds) or an impulse train (in case of voiced sounds). Hence, $H^{-1}(z) = 1 + z^{-1}P(z)$ is an FIR filter.
The filter $F_0(z)$ is an initial estimate of $F(z)$ with $\frac{1}{1-G(z)(F(z)-F_0(z))}$ assumed to be stable. It may be replaced during identification of $A(z)$ and $B(z)$ by a previously obtained estimate $-A^{-1}(z)B(z)$. The filter $A^{-1}(z)$ should be constrained to be stable. If $F_0(z)$ is kept fixed during adaptation, the cost function $\frac{1}{N}\sum_{k=0}^{N-1} e_k^2$ is *linear* in $\mathbf{b}$ and $\mathbf{a}$. If $F_0(z)$ is replaced by a previous estimate of $-A^{-1}(z)B(z)$ during adaptation, $\mathbf{u}_k$ and $\mathbf{y}_k$ depend on previous values of $A(z)$ and $B(z)$. In this case, the optimisation criterion is *nonlinear* in $\mathbf{b}$ and $\mathbf{a}$.
Assume that the system in **Figure 3** is sufficiently linear and stationary so that we can use the Z-transform theory. Then, according to Parseval's theorem,

$$\frac{1}{N}\sum_{k=0}^{N-1} e_k^2 = \frac{1}{2\pi N j}\oint_{\mathbf{C}} \frac{E(z)E(z^{-1})}{z}dz, \tag{3}$$

with $\mathbf{C}$ the unit circle and $E(z) = B(z)U(z) + A(z)Y(z)$ the Z-transform of the sequence $\{e_k\}_{k=0,\ldots,N-1}$. The inputs $U(z)$ and $Y(z)$ of the two-channel adaptive filter are given as

$$U(z) = G(z)(Y(z) - F_0(z)U(z)) + R(z), \tag{4}$$
$$Y(z) = F(z)U(z) + X(z), \tag{5}$$

where $R(z)$ is the noise signal injected at the input of the loudspeaker. Using (5) and (4), the output $E(z)$ of the two-channel adaptive filter can be written as

$$E(z) = \frac{B(z) + A(z)F(z)}{1 - G(z)(F(z) - F_0(z))}R(z) + \left(A(z) + \frac{G(z)(B(z) + A(z)F(z))}{1 - G(z)(F(z) - F_0(z))}\right)H(z)W(z). \tag{6}$$

Section 3 studies under which conditions minimization of (3), has the unique solution $A(z) = H^{-1}(z)$, $B(z) = -H^{-1}(z)F(z)$.

3. UNIQUE SOLUTION/IDENTIFIABILITY

To analyse (6), we distinguish between two cases: $R(z) \neq 0$ (noise injection) and $R(z) = 0$ (no noise injection).

3.1. Case 1: $R(z) \neq 0$ (noise injection)

If $R(z) \neq 0$ and if $r[k]$ and $x[k]$ are uncorrelated, minimization of $\oint_{\mathbf{C}} E(z)E(z^{-1})\frac{dz}{z}$, results in minimization of $\oint_{\mathbf{C}}[E_1(z)E_1(z^{-1}) + E_2(z)E_2(z^{-1})]\frac{dz}{z}$, where $E_1(z)$ and $E_2(z)$ equal

$$E_1(z) = \frac{B(z) + A(z)F(z)}{1 - G(F(z) - F_0(z))}R(z) \tag{7}$$

$$E_2(z) = \left(A(z) + \frac{G(z)(B(z) + A(z)F(z))}{1 - G(F(z) - F_0(z))}\right)X(z). \tag{8}$$

Assume N_B and N_A are adequately chosen i.e. sufficiently large. Minimizing $\oint_{\mathbf{C}} E_1(z)E_1(z^{-1})\frac{dz}{z}$ results in $B(z) = -A(z)F(z)$ leading to $\oint_{\mathbf{C}} E_1(z)E_1(z^{-1})\frac{dz}{z} = 0$. Plugging this into (8), we obtain $E_2(z) = A(z)X(z)$. Minimization of $\oint_{\mathbf{C}} E_2(z)E_2(z^{-1})\frac{dz}{z}$ with $A(z) = 1 + z^{-1}\bar{A}(z)$ corresponds to linear prediction of $X(z)$. Since $X(z) = H(z)W(z)$, this results in $A(z) = H^{-1}(z)$. Hence the optimal solution is found to be unique and to equal the desired solution.

3.2. Case 2: $R(z) = 0$ (no noise injection)

If $R(z) = 0$, minimization of $\oint_{\mathbf{C}} E(z)E(z^{-1})\frac{dz}{z}$ reduces to minimization of $\oint_{\mathbf{C}} E_2(z)E_2(z^{-1})\frac{dz}{z}$.

3.2.1. Delay d in the forward path

Suppose $G(z) = z^{-d}\bar{G}(z)$ with $d \geq 1$ and $\bar{G}(z)$, $F(z)$, $F_0(z)$ are causal. For causal FIR filters $A(z)$ and $B(z)$,

$$\Gamma(z) = \frac{\bar{G}(z)(B(z) + A(z)F(z))}{1 - z^{-d}\bar{G}(z)(F(z) - F_0(z))} \tag{9}$$

is a causal IIR filter, which may be specified as $\Gamma(z) = \gamma_0 + z^{-1}\gamma_1 + \ldots$. Since the first tap of $A(z) + z^{-d}\Gamma(z)$ in (8) equals the first tap $a_0 = 1$ of $A(z)$, minimization of $\oint_{\mathbf{C}} E_2(z)E_2(z^{-1})\frac{dz}{z}$ corresponds to linear prediction of $X(z)$, such that the optimal

solution corresponds to $[A(z) + z^{-d}\Gamma(z)]X(z) = H^{-1}(z)X(z)$ or

$$A(z) + z^{-d}\frac{\bar{G}(z)(B(z) + A(z)F(z))}{1 - z^{-d}\bar{G}(z)(F(z) - F_0(z))} = H^{-1}(z). \quad (10)$$

In general, $A(z)$ and $B(z)$ are not uniquely determined by (10). Equating powers of z in (10) we see that -if N_A and N_B are large enough such that $A(z)$ and $B(z)$ can model $H^{-1}(z)$ and $-H^{-1}(z)F(z)$ respectively i.e. $\boxed{N_A \geq N_{H^{-1}}}$ and $\boxed{N_B \geq N_{H^{-1}} + N_F}$ with $N_{H^{-1}} = N_P + 1$, and if $\boxed{d \geq N_A}$ - the solution is unique and equals

$$A(z) = H^{-1}(z);\ B(z) = -H^{-1}(z)F(z). \quad (11)$$

If $d = N_A$ but N_A is smaller than the length of $H^{-1}(z)$ the solution of (10) is unique but biased because $H^{-1}(z)$ is under modelled.

Note that the biased, continuous adaptation algorithm depicted in Figure 1 can be interpreted as a special case of the two-channel adaptive filtering scheme in which $A(z) = 1$. If $X(z)$ is nontonal, the correlation between $X(z)$ and $z^{-d}X(z)$ will be negligible for significantly large d, such that the minimization of $\oint_{\mathbf{C}} E_2(z)E_2(z^{-1})\frac{dz}{z}$ decouples in to minimization of

$$\oint_{\mathbf{C}} A(z)X(z)A(z^{-1})X(z^{-1})\frac{dz}{z} + \oint_{\mathbf{C}} \Gamma(z)X(z)\Gamma(z^{-1})X(z^{-1})\frac{dz}{z}. \quad (12)$$

Since $A(z) = 1$, only the second term can be minimized and hence, $B(z)$ converges to $F(z)$.

Also note that in (10) the error $B(z) + A(z)F(z)$ is weighted by $\frac{\bar{G}(z)}{1 - z^{-d}\bar{G}(z)(F(z) - F_0(z))}$. The larger $\left|\frac{\bar{G}(z)}{1 - z^{-d}\bar{G}(z)(F(z) - F_0(z))}\right|$, the smaller the bias of the feedback path will be in a biased approach.

3.2.2. Delay d_2 in the cancellation path

Suppose a delay d_2 is added to the cancellation path i.e. $B(z) = z^{-d_2}\bar{B}(z)$ with $\bar{B}(z)$ causal and suppose $F(z) = z^{-d_2}\bar{F}(z)$ with $\bar{F}(z)$ causal. If $d_2 + d \geq N_A$ with $d \geq 1$ and if $N_A \geq N_{H^{-1}}$ and $N_B \geq N_{H^{-1}} + N_F$, the solution of (10) is unique and equals the desired solution. If the first d_2 taps of the feedback path $F(z)$ differ from zero, the solution will be biased.

3.2.3. Time varying $F_0(z)$, $\bar{G}(z)$ or nonlinear $\bar{G}(z)$

In general, (10) implies that there are several solutions for $A(z)$ and $B(z)$. If $\bar{G}(z)$ or $F_0(z)$ are time varying, the positions of the spurious solutions will change with time such that it is likely that -with sufficient averaging- the algorithm will converge to the desired solution. Hence, if $F_0(z)$ is at each time instant replaced by the most recent estimate of $-A^{-1}(z)B(z)$, the adaptive algorithm may converge to the desired solution, even without adding a delay in the forward path.

A nonlinear $\bar{G}(z)$ reduces the correlation between $X(z)$ and $\frac{\bar{G}(z)}{(1 - z^{-d}\bar{G}(z)(F(z) - F_0(z)))}X(z)$ such that it decouples the minimization of $\oint_{\mathbf{C}} E_2(z)E_2(z^{-1})\frac{dz}{z}$ into minimization of (12) and thus also makes $A(z)$, $B(z)$ identifiable.

4. SIMULATION RESULTS

Section 3 shows that under certain conditions the filters $A(z)$ and $B(z)$ are identifiable even if no additional noise $R(z)$ is injected in the system. Inserting e.g. a large enough delay d in the forward path $G(z)$ renders the system identifiable. Inserting a delay d_2 in the cancellation path only results in an unbiased solution if the first d_2 taps of $F(z)$ equal 0. Making $\bar{G}(z)$ nonlinear or inserting a noise signal $R(z)$ also helps to make the system identifiable but may degrade the sound quality of the microphone signal. Hence, *inserting a delay d in the forward path is the preferred option*. This Section illustrates the performance of the two-channel identification method through simulation for this scenario. The two cases, adaptive and fixed $F_0(z)$, are considered. For comparison, the results obtained with the continous adaptation algorithm of **Figure 1** are given too.

4.1. Recursive Algorithm

In the simulations, Recursive Least Squares (RLS) is used to update the two-channel adaptive filter. If however at each time instant the filter $F_0(z)$ is replaced by the most recent estimate of $-A^{-1}(z)B(z)$ during adaptation, $\mathbf{u}_k, \mathbf{y}_k$ depend on previous estimates of $\mathbf{b}$ and $\mathbf{a}$ such that the optimisation problem becomes nonlinear. This dependency is effectively ignored in our implementation, which corresponds to neglecting the second term in the gradient of the cost function

$$\begin{bmatrix} \frac{\partial e}{\partial \mathbf{b}} \\ \frac{\partial e}{\partial \mathbf{a}} \end{bmatrix} e = \left(\begin{bmatrix} \mathbf{u}_k \\ \mathbf{y}_k \end{bmatrix} + \begin{bmatrix} \frac{\partial \mathbf{u}_k^T}{\partial \mathbf{b}} & \frac{\partial \mathbf{y}_k^T}{\partial \mathbf{b}} \\ \frac{\partial \mathbf{u}_k^T}{\partial \mathbf{a}} & \frac{\partial \mathbf{y}_k^T}{\partial \mathbf{a}} \end{bmatrix} \begin{bmatrix} \mathbf{b} \\ \mathbf{a} \end{bmatrix} \right) e. \quad (13)$$

This algorithm resembles a pseudo-linear regression algorithm (cfr. the pseudo-linear regression algorithm used in output error IIR adaptive filters [6]).

4.2. Simulation Results

In the simulations, the acoustic feedback path model $F(z)$ is a 49th order FIR filter. The hearing aid input signal $x[k]$ is a speech-shaped noise signal created by passing Gaussian noise through a 10th order all-pole filter $H(z)$. The forward path model equals $z^{-d}\bar{G}$, with $\bar{G} = 5$. **Figure 4** shows the misalignment $\zeta(F, \hat{F})$ (in dB) of the estimated feedback path $\hat{F}$ as a function of the number of samples for the continuous adaptation algorithm and for the two-channel adaptive filter for $d = N_{H^{-1}} = 11$. The filter lengths of the adaptive filters are set to the true model orders i.e. $N_A = N_{H^{-1}}$, $N_B = N_{H^{-1}} + N_F$ in the two-channel adaptive filter technique and $N_{\hat{F}} = N_F$ in the biased continuous adaptation algorithm. The misalignment $\zeta(F, \hat{F})$ is computed in the frequency domain as

$$\zeta(F, \hat{F}) = \frac{\sum_{k=0}^{N_f - 1} \left| F(e^{j\pi\frac{k}{N_f}}) - \hat{F}(e^{j\pi\frac{k}{N_f}}) \right|^2}{\sum_{k=0}^{N_f - 1} \left| F(e^{j\pi\frac{k}{N_f}}) \right|^2}, \quad (14)$$

where $N_f = 64$ equals the number of frequency points used. Here $\hat{F}(z)$ is the obtained estimate of the feedback path. In the two-channel approach $\hat{F}(z)$ equals $-A^{-1}(z)B(z)$. For comparison, the misaligment of the feedback path estimate obtained with Filtered-X RLS using the correct speech model, which we consider in some sense an optimal solution, is depicted too. The solid lines correspond to a fixed filter F_0 with $F_0(z) = 0$, the dotted lines are the ones obtained for a continuously adapted $F_0(z) =$

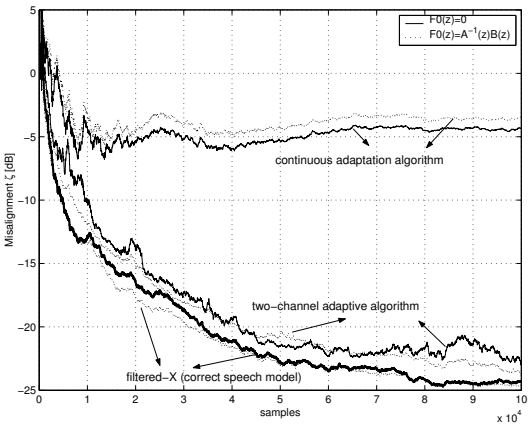

Figure 4: Frequency domain misalignment $\zeta(F, \hat{F})$ of the feedback path estimate $-A^{-1}(z)B(z)$ for $d = 11$.

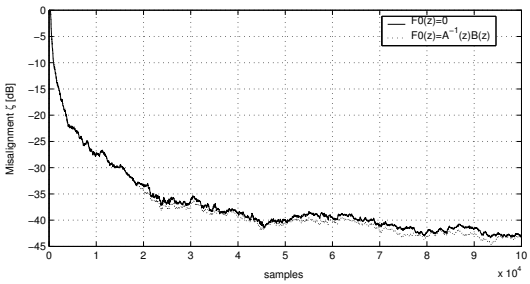

Figure 5: Frequency domain misalignment $\zeta(H, \hat{H})$ of the speech model estimate $A(z)$ for $d = 11$.

$-A^{-1}(z)B(z)$. In this simulation, these two lines nearly coincide. Other simulations have shown that for $F_0(z) = -A^{-1}(z)B(z)$ the convergence of the misalignment of the feedback path estimate strongly depends on the initialisation of the covariance matrix, but always outperforms the biased continuous adaptation algorithm. The two-channel adaptive filter performs nearly as well as the optimal filtered-X algorithm and clearly outperforms the biased continuous adaptation algorithm. **Figure 5** shows the misalignment of the speech model estimate obtained with the two-channel adaptive algorithm. The misalignment of the speech model drops significantly. This indicates that also the speech model estimate converges to the true model.

Figure 6 plots the amplitude characteristic of the loop response $G(z)(F(z) - \hat{F}(z))$ with $\hat{F}(z)$ the feedback path estimate obtained by the three different algorithms for $F_0(z) = 0$. The loop response when no feedback cancellation is applied, is depicted too. Compared to the continuous adaptation algorithm, the margin to 0 dB is significantly increased by the two-channel adaptive algorithm and the optimal filtered-X algorithm. As mentioned in Section 3, the bias of the continuous adaptation algorithm is the smallest where $\left|\frac{G(z)}{1-G(z)(F(z)-F_0(z))}\right|$, which is depicted in **Figure 7**, is large.

5. CONCLUSIONS

In this paper, we have presented an unbiased, adaptive feedback cancellation system for hearing aids. The algorithm is based on a closed loop identification of the feedback path and the (linear prediction) model of the near-end input signal. In general, both

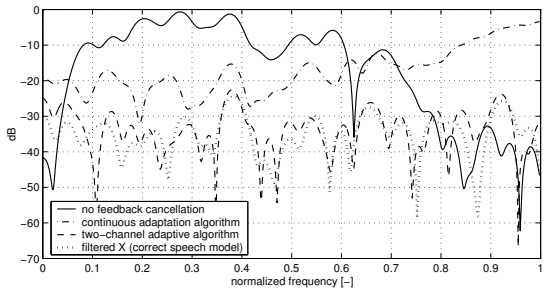

Figure 6: Amplitude characteristic of the loop response $G(z)(F(z) - \hat{F}(z))$ for $\hat{F}(z) = 0$ (no feedback cancellation) and $\hat{F}(z)$ the feedback path estimate obtained by the three different algorithms.

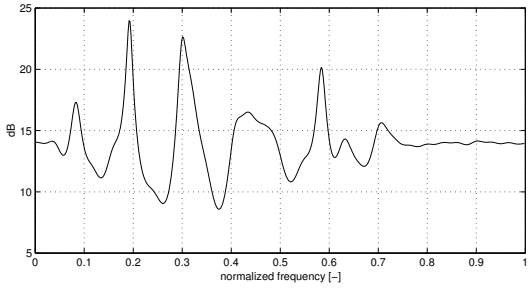

Figure 7: Amplitude characteristic of $\frac{G(z)}{1-G(z)(F(z)-F_0(z)}$.

models are not simultaneously identifiable in the closed loop system at hand. We show that -under certain conditions e.g. if a delay is inserted in the forward path- identification of both models is possible. Simulation results demonstrate that -under these conditions- the unbiased modelling approach outperforms the biased continuous adaptation algorithm.

6. REFERENCES

[1] J. A. Maxwell and P. M. Zurek, "Reducing Acoustic Feedback in Hearing Aids," *IEEE Trans. SAP*, vol. 3, no. 4, pp. 304–313, July 1995.

[2] J. E. Greenberg, P. M. Zurek, and M. Brantley, "Evaluation of feedback-reduction algorithms for hearing aids," *J. Acoust. Soc. Amer.*, vol. 108, no. 5, pp. 2366–2376, Nov. 2000.

[3] M. G. Siqueira and A. Alwan, "Steady-state analysis of continuous adaptation in acoustic feedback reduction systems for hearing-aids," *IEEE Trans. SAP*, vol. 8, no. 4, pp. 443–453, July 2000.

[4] H. A. L. Joson, F. Asano, Y. Suzuki, and S. Toshio, "Adaptive feedback cancellation with frequency compression for hearing aids," *J. Acoust. Soc. Amer.*, vol. 94, no. 6, pp. 3248–3254, Dec. 1993.

[5] J. Hellgren, *Compensation for hearing loss and cancellation of acoustic feedback in digital hearing aids*, Ph.D. thesis, Dep. of Neuroscience and Locomotion, Division of Technical Audiology, Linköpings universitet, SE-581 Linköping, Sweden, Apr. 2000.

[6] J. J. Shynk, "Adaptive IIR Filtering," *IEEE ASSP Magazine*, vol. 6, no. 2, pp. 4–21, Apr. 1989.