Katholieke Universiteit Leuven

Departement Elektrotechniek ESAT-SISTA/TR 2004-167

An instrumental variable method for adaptive feedback cancellation in hearing aids [1]

Ann Spriet[2], Ian Proudler[3] ,Marc Moonen[4] ,Jan Wouters[5]

Published in IEEE International Conference on Acoustics, Speech and Signal Processing, Philadelphia, PA, USA, March 2005, vol. III, pp. 129–132

[1]This report is available by anonymous ftp from *ftp.esat.kuleuven.ac.be* in the directory *pub/sista/spriet/reports/04-167.pdf*

[2]K.U.Leuven, Dept. of Electrical Engineering (ESAT), SISTA, Kasteelpark Arenberg 10, 3001 Leuven-Heverlee, Belgium, Tel. 32/16/32 18 99, Fax 32/16/32 19 70, WWW: *http://www.esat.kuleuven.ac.be/sista*. E-mail: *ann.spriet@esat.kuleuven.ac.be*. K.U.Leuven, Lab. Exp. ORL/ ENT-Dept., Kapucijnenvoer 33, 3000 Leuven, Belgium, Tel. 32/16/33 24 15, Fax 32/16/33 23 35, WWW: *http://www.kuleuven.ac.be/exporl/Lab/Default.htm*. This research work was carried out at the ESAT laboratory and Lab. Exp. ORL of the Katholieke Universiteit Leuven, in the the frame of IUAP P5/22 ('Dynamical Systems and Control: Computation, Identification and Modelling'), the Concerted Research Action GOA-MEFISTO-666 (Mathematical Engineering for Information and Communication Systems Technology)of the Flemish Government, Research Project FWO nr.G.0233.01 ('Signal processing and automatic patient fitting for advanced auditory prostheses'), IWT project 020540 ('Innovative Speech Processing Algorithms for Improved Performance of Cochlear Implants') and was partially sponsored by QinetiQ. The scientific responsibility is assumed by its authors.

[3]QinetiQ Ltd., Malvern Technology Centre, St Andrews Road, Malvern, Worcestershire, WR14 3PS, UK. Tel: +44 (0) 1684 894228, Fax: +44 (0) 1684 896502, E-mail: *i.proudler@signal.qinetiq.com*.

[4]K.U.Leuven, Dept. of Electrical Engineering (ESAT), SISTA, Kasteelpark Arenberg 10, 3001 Heverlee, Belgium, Tel. 32/16/32 17 09, Fax 32/16/32 19 70, WWW: *http://www.esat.kuleuven.ac.be/sista*. E-mail: *marc.moonen@esat.kuleuven.ac.be*. Marc Moonen is a professor at the Katholieke Universiteit Leuven.

[5]K.U.Leuven, Lab. Exp. ORL, Dept. Neurowetenschappen, Kapucijnenvoer 33, 3000 Leuven, Belgium, Tel. 32/16/33 23 42, Fax 32/16/33 23 35, WWW: *http://www.kuleuven.ac.be/exporl/Lab/Default.htm* E-mail: *jan.wouters@uz.kuleuven.ac.be*. Jan Wouters is a professor at the Katholieke Universiteit Leuven.

AN INSTRUMENTAL VARIABLE METHOD FOR ADAPTIVE FEEDBACK CANCELLATION IN HEARING AIDS

Ann Spriet[1,2*], *Ian Proudler*[3], *Marc Moonen*[1], *Jan Wouters*[2]

[1]K.U. Leuven, ESAT/SCD-SISTA, Kasteelpark Arenberg 10, 3001 Leuven, Belgium
[2]K.U. Leuven - Lab. Exp. ORL, Kapucijnenvoer 33, 3000 Leuven, Belgium
[3]QinetiQ Ltd., Malvern Techn. Centre, St Andrews Road, Malvern, Worcestershire, WR14 3PS, UK

ABSTRACT

In this paper, we propose an instrumental variable method for adaptive feedback cancellation (IV-AFC) in hearing aids that is based on the auto-regressive modelling of the desired signal. The IV-AFC offers better feedback suppression for spectrally colored signals than the standard continuous adaptation feedback cancellers. In contrast to a previously proposed prediction error method based feedback canceller, the IV-AFC does not suffer from stability problems when the adaptive feedback canceller is highly time-varying.

1. INTRODUCTION

Acoustic feedback limits the maximum gain that can be used in a hearing aid without making it unstable. A promising solution for acoustic feedback is the use of an adaptive feedback canceller. However, because of the presence of a closed signal loop, i.e., the so-called forward path $G(q)$, the standard continuous adaptation feedback cancellers (CAF) fail to provide a reliable feedback path estimate if the desired signal $x[k]$ is spectrally colored [1, 2].

In [2, 3], an adaptive feedback canceller based on the direct method of closed-loop identification and a *fixed* estimate of the desired signal model has been proposed. It has been shown that an unbiased feedback path estimate can be obtained by means of a filtered-X algorithm if the desired signal $x[k]$ can be modelled as $H(q)w[k]$, with $w[k]$ white noise, and the desired signal model $H(q)$ is known. In practice, $H(q)$ is unknown and highly time-varying so that it is desirable to also estimate this model adaptively. In [4], we have derived a prediction error method based adaptive feedback canceller (PEM-AFC) that identifies both the desired signal model $H(q)$ and the feedback path $F(q)$. For highly time-varying signals such as speech, the PEM-AFC has a clear benefit over the filtered-X algorithm of [2, 3]. In the filtered-X algorithm of [2, 3] and the PEM-AFC [4], the feedback compensated signal $e[k]$ is filtered with the estimate of $H^{-1}(q)$ before using it to update the adaptive feedback canceller $\hat{F}(q)$. If the estimate of $H^{-1}(q)$ contains a group delay, the correction term in the adaptation of $\hat{F}(q)$ is delayed. As a result, instability may occur when the adaptive filter $\hat{F}(q)$ is fast time-varying, e.g., in highly time-varying environments [5, 6].

*This research was carried out at ESAT and Lab. Exp. ORL of K.U. Leuven, in the frame of IUAP P5/22, the Concerted Research Action GOA-MEFISTO-666, FWO Project nr. G.0233.01, *Signal Processing and automative patient fitting of auditory prostheses*, IWT project 020540, *Innovative speech processing algorithms for improved performance in cochlear implants* and was partially sponsored by QinetiQ. The scientific responsibility is assumed by its authors.

In this paper, we propose an instrumental variable (IV) method for adaptive feedback cancellation (IV-AFC). We show that the IV method produces an unbiased feedback path estimate if the input-output data are pre-filtered with $H^{-1}(q)$ and the pre-filtered input data are used as instrumental variables. As such, the IV-AFC corresponds to a modified version of the PEM-AFC: the PEM-AFC rather uses pre-filtered versions (with $H^{-1}(q)$) of the input and the error signal. Simulations demonstrate that the IV-AFC, as the PEM-AFC, outperforms the standard CAF. Moreover, in contrast to the PEM-AFC, the IV-AFC does not suffer from stability problems when the adaptive filter $\hat{F}(q)$ is highly time-varying, while the computational complexity is only slightly increased.

Notation

The symbol q^{-1} denotes the discrete-time delay operator, i.e., $q^{-1}u[k] = u[k-1]$. A discrete-time filter with coefficient vector $\mathbf{f} = \begin{bmatrix} f_0 & f_1 & \cdots & f_{L_F-1} \end{bmatrix}^T$ and filter length L_F is represented as a polynomial $F(q)$ in q, i.e.,

$$F(q) \quad = \quad f_0 + f_1 q^{-1} + \ldots + f_{L_F-1} q^{-L_F+1}. \qquad (1)$$

Filtering $u[k]$ with $F(q)$ is denoted as $F(q)u[k]$ or $\mathbf{f}^T\mathbf{u}[k]$ with $\mathbf{u}[k] = \begin{bmatrix} u[k] & u[k-1] & \cdots & u[k-L_F+1] \end{bmatrix}^T$. The filter $F(q,k)$ refers to a time-varying filter with coefficient vector $\mathbf{f}[k]$.

2. CLOSED-LOOP SYSTEM SET-UP

Figure 1 depicts the closed-loop system set-up of a hearing aid. The *open-loop system to be identified* is described by

$$y[k] = F(q)u[k] + x[k], \qquad (2)$$

where $y[k]$ is the microphone signal and $u[k]$ the loudspeaker signal. In general, the desired signal $x[k]$ is an audio signal (e.g., a speech signal). Many audio signals can be closely approximated by a low-order autoregressive (AR) random process

$$x[k] = H(q)w[k] = \frac{1}{1 + q^{-1}P(q)} w[k], \qquad (3)$$

with $w[k]$ white noise[1] and $P(q)$ an FIR filter.

The output signal $y[k]$ is fed-back to the input $u[k]$ according to

$$u[k] = G(q)\left(y[k] - \hat{F}_0(q)u[k]\right). \qquad (4)$$

Using (2) and (4), the input $u[k]$ can be written as

[1]Note that the white noise assumption is not satisfied for periodic signals such as voiced speech segments. E.g., the excitation $w[k]$ of a voiced speech segment is an impulse train [7].

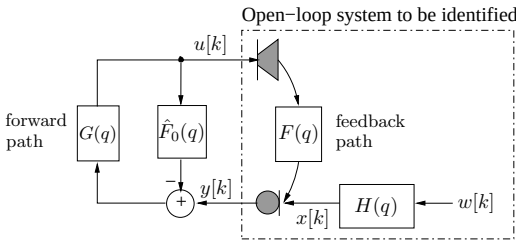

Fig. 1. Closed-loop system set-up of a hearing aid.

$$u[k] = \frac{G(q)}{1 - G(q)\left(F(q) - \hat{F}_0(q)\right)} x[k] = C(q)x[k], \quad (5)$$

The filter $\hat{F}_0(q)$ in the feedback cancellation path is an initial estimate of the feedback path $F(q)$ chosen such that the closed-loop system $C(q)$ is stable. During adaptation, it is typically replaced with the feedback path estimate $\hat{F}(q)$. In the sequel, we assume that the forward path $G(q)$ contains a delay $d_f \geq 1$ sample.

3. INSTRUMENTAL VARIABLE BASED AFC

3.1. Instrumental variable method [8, 9]

Let $A(q)$ be a pre-filter and let

$$x_p[k] = A(q)x[k];\ u_p[k] = A(q)u[k];\ y_p[k] = A(q)y[k]. \quad (6)$$

The idea behind the Instrumental Variable (IV) method is to use a generic regression vector $\boldsymbol{\xi}[k] \in \mathbb{R}^{L_{\hat{F}} \times 1}$, called the IV vector, that is uncorrelated with $x_p[k]$ but correlated with the pre-filtered signal $u_p[k]$, and to compose the feedback path estimate $\hat{\mathbf{f}}[k]$ as

$$\hat{\mathbf{f}} = \left(\boldsymbol{\Xi}^T[k]\mathbf{U}_p[k]\right)^{-1} \boldsymbol{\Xi}^T[k]\mathbf{y}_p[k], \quad (7)$$

where

$$\boldsymbol{\Xi}[k] = \begin{bmatrix} \lambda^0 \boldsymbol{\xi}^T[k] \\ \lambda^{\frac{1}{2}} \boldsymbol{\xi}^T[k-1] \\ \vdots \\ \lambda^{\frac{k}{2}} \boldsymbol{\xi}^T[0] \end{bmatrix}, \quad \mathbf{U}_p[k] = \begin{bmatrix} \lambda^0 \mathbf{u}_p^T[k] \\ \lambda^{\frac{1}{2}} \mathbf{u}_p^T[k-1] \\ \vdots \\ \lambda^{\frac{k}{2}} \mathbf{u}_p^T[0] \end{bmatrix}, \quad (8)$$

$$\mathbf{y}_p[k] = \begin{bmatrix} \lambda^0 y_p[k] & \lambda^{\frac{1}{2}} y_p[k-1] & \cdots & \lambda^{\frac{k}{2}} y_p[0] \end{bmatrix}^T, \quad (9)$$

$$\mathbf{u}_p[k] = \begin{bmatrix} u_p[k] & u_p[k-1] & \cdots & u_p[k - L_{\hat{F}} + 1] \end{bmatrix}^T. \quad (10)$$

The forgetting factor $\lambda \in (0, 1]$ has been included to allow for tracking in time-varying scenarios.

In the sequel, we give the IV vector $\boldsymbol{\xi}[k]$ and the pre-filter $A(q)$ for which an unbiased feedback path estimate $\hat{\mathbf{f}}$ is obtained.

3.2. Unbiased feedback path estimate

Assume that $L_{\hat{F}} = L_F$ and that $F(q)$ is time-invariant. Then, the feedback path estimate (7) equals

$$\hat{\mathbf{f}} = \mathbf{f} + \underbrace{\left(\boldsymbol{\Xi}^T[k]\mathbf{U}_p[k]\right)^{-1} \boldsymbol{\Xi}^T[k]\mathbf{x}_p[k]}_{\text{bias}}, \quad (11)$$

where

$$\mathbf{x}_p[k] = \begin{bmatrix} \lambda^0 x_p[k] & \lambda^{\frac{1}{2}} x_p[k-1] & \cdots & \lambda^{\frac{k}{2}} x_p[0] \end{bmatrix}^T.$$

If the IV vector $\boldsymbol{\xi}[k]$ and $x_p[k]$ are uncorrelated (i.e., $\boldsymbol{\Xi}^T[k]\mathbf{x}_p[k] = \mathbf{0}$) and $\boldsymbol{\Xi}^T[k]\mathbf{U}_p[k]$ is non-singular, the bias term in (11) goes to zero for $k \to \infty$ and $\lambda = 1$.

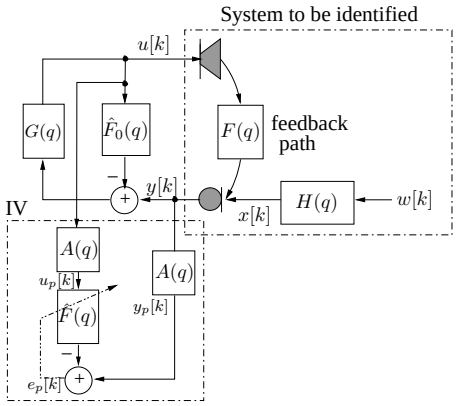

Fig. 2. Instrumental variable method.

Depending on the choice of the IV vector $\boldsymbol{\xi}[k]$ and the pre-filter $A(q)$, different IV methods are possible. Here we develop one based on the idea that if $x[k] = H(q)w[k]$ with $w[k]$ white noise, the choice

$$A(q) = H^{-1}(q), \quad \boldsymbol{\xi}[k] = H^{-1}(q)\mathbf{u}[k] = \mathbf{u}_p[k] \quad (12)$$

offers the best accuracy among all choices for the instruments $\boldsymbol{\xi}[k]$ and the pre-filter $A(q)$, provided that $u_p[k]$ and $x_p[k]$ are uncorrelated and $\boldsymbol{\Xi}^T[k]\mathbf{U}_p[k] = \mathbf{U}_p^T[k]\mathbf{U}_p[k]$ is non-singular [8, 9]. The feedback path estimate $\hat{\mathbf{f}}$ then becomes

$$\begin{aligned} \hat{\mathbf{f}} &= \left(\mathbf{U}_p^T[k]\mathbf{U}_p[k]\right)^{-1} \mathbf{U}_p^T[k]\mathbf{y}_p[k] \\ &= \mathbf{f} + \left(\mathbf{U}_p^T[k]\mathbf{U}_p[k]\right)^{-1} \mathbf{U}_p^T[k]\mathbf{x}_p[k]. \end{aligned} \quad (13)$$

For $A(q) = H^{-1}(q)$, $x_p[k]$ equals $w[k]$ and $u_p[k]$ equals $C(q)w[k]$ with $C(q)$ defined in (5). Hence, if $w[k]$ is white and $G(q)$ contains a delay $d_f \geq 1$, the IV vector $\boldsymbol{\xi}[k] = \mathbf{u}_p[k]$ and $x_p[k]$ are uncorrelated, so that the feedback path estimate (13) is unbiased for $k \to \infty$.

The feedback path estimate (13) minimizes the least-squares cost function

$$\left\| \mathbf{y}_p[k] - \mathbf{U}_p[k]\hat{\mathbf{f}} \right\|_2 \quad (14)$$

Hence, the coefficient vector $\hat{\mathbf{f}}[k]$ can be adapted by applying the standard adaptive filtering techniques (e.g., RLS or LMS) to the pre-filtered data $y_p[k]$ and $u_p[k]$, as depicted in Figure 2. For RLS, this results in the update equation:

$$\begin{aligned} \hat{\mathbf{f}}[k] &= \hat{\mathbf{f}}[k-1] + \mathbf{R}^{-1}[k]\mathbf{u}_p[k]\left(y_p[k] - \hat{\mathbf{f}}^T[k-1]\mathbf{u}_p[k]\right) \\ \mathbf{R}[k] &= \lambda \mathbf{R}[k-1] + \mathbf{u}_p[k]\mathbf{u}_p^T[k] \end{aligned} \quad (15)$$

The matrix $\mathbf{R}^{-1}[k]$ in (15) may be updated using the matrix inversion lemma (cf. Algorithm 2).

3.3. Estimation of the desired signal model

In practice, the desired signal model $H(q)$ is unknown and time-varying so that $H^{-1}(q)$ has to be estimated adaptively. In general though, the feedback path $F(q)$ and the desired signal model $H(q)$ are not both identifiable in the closed-loop system at hand [2]. In [4], we demonstrated that not only inserting non-linearities or a probe signal $r[k]$, but also adding a delay in the forward path or the cancellation path can render the system identifiable. If the total delay $d = d_f + d_c \geq L_{H^{-1}}$ with d_c the common delay in the

feedback path $F(q)$ and the cancellation path $\hat{F}(q)$, the desired signal $H(q)$ and the feedback path $F(q)$ can be both identified in closed-loop. Assuming that $L_A \geq L_{H^{-1}}$, we set $d_f \geq L_A$.

If $F(q)$ was known, we could compute $x[k]$ as

$$x[k] = y[k] - F(q)u[k]. \tag{16}$$

Assuming an AR model for $x[k]$ (cf. (3)), an estimate $A(q) = 1 + q^{-1}\bar{A}(q)$ of the inverse desired signal model $H^{-1}(q)$ could then be computed by solving the linear prediction problem

$$\bar{A}(q,k) = \arg \min_{\bar{A}(q,k)} \sum_{\bar{k}=0}^{k} \lambda_{\bar{a}}^{k-\bar{k}} \left(x[k] + \bar{A}(q,k)x[k-1]\right)^2. \tag{17}$$

where $\lambda_{\bar{a}}$ is the forgetting factor. Since $F(q)$ is unknown, we use the feedback compensated signal

$$\epsilon[k] = y[k] - \hat{F}(q,k-1)u[k] \tag{18}$$

instead of $x[k]$ to compute $\bar{A}(q,k)$ in (17) [8, 10]. To update the AR coefficients $\bar{\mathbf{a}}[k]$, we use the Burg lattice algorithm [11], described in *Algorithm 1*.

The pre-filtered data $y_p[k]$, $u_p[k]$ in (15) are then computed as

$$y_p[k] = A(q,k-1)y[k], \quad u_p[k] = A(q,k-1)u[k]. \tag{19}$$

The complete algorithm, which is a special case of the IV approximate maximum likelihood algorithm of [10], is summarized in the tabulated *Algorithm 2*. We refer to this algorithm as IV based adaptive feedback canceller (IV-AFC). Note that the IV-AFC can be seen as a modified version of the PEM-AFC where the input-output data, rather than the input and the error signal are pre-filtered with $H^{-1}(q)$.

In contrast to the filtered-X algorithm of [2] and the PEM-AFC [4], any change to the adaptive filter $\hat{\mathbf{f}}$ has an immediate effect on the adaptation error $\epsilon_p[k] = y_p[k] - \hat{\mathbf{f}}^T[k-1]\mathbf{u}_p[k]$, irrespective of the group delay in $A(q)$. As a result, the IV method does not suffer from instability problems when there is a group delay associated with $A(q)$ and the adaptive filter $\hat{\mathbf{f}}$ is highly time-varying. Compared to the PEM-AFC, an additional filtering with $\hat{\mathbf{f}}$ is required to compute the feedback compensated signal $\epsilon[k] = y[k] - \hat{F}(q)u[k]$. In hearing aids, the dominant part of the true feedback path $F(q)$ is short, so that a short filter length $L_{\hat{F}}$ for $\hat{\mathbf{f}}$ is typically used. Hence, the increase in computational complexity with respect to the PEM-AFC is limited.

Note: Like the PEM-AFC, the IV-AFC assumes that the desired signal model $H(q)$ is stationary over a time window with the length L_F of the feedback path $\mathbf{f}$. In hearing aids, the dominant part of the feedback path $F(q)$ is short, so that this assumption is justified [4].

Algorithm 1 Burg lattice algorithm.

Initialization:

$f_0[k] = \epsilon[k] = y[k] - \hat{\mathbf{f}}[k-1]\mathbf{u}[k]$;
$b_0[k] = \epsilon[k]$;

For $i = 1, \ldots, L_A - 1$:

$d_i[k] = \lambda_{\bar{\mathbf{a}}} d_i[k-1] + (1-\lambda_{\bar{\mathbf{a}}})\left[f_{i-1}^2[k] + b_{i-1}^2[k-1]\right]$
$n_i[k] = \lambda_{\bar{\mathbf{a}}} n_i[k-1] + (1-\lambda_{\bar{\mathbf{a}}})(-2) f_{i-1}[k] b_{i-1}[k-1]$
$\kappa_i[k] = \frac{n_i[k]}{d_i[k]}$
$f_i[k] = f_{i-1}[k] + \kappa_i[k] b_{i-1}[k-1]$ (forward residuals)
$b_i[k] = \kappa_i[k] f_{i-1}[k] + b_{i-1}[k-1]$ (backward residuals)

Algorithm 2 IV based adaptive feedback canceller (IV-AFC).

Initialization:

$\hat{\mathbf{f}}[0] = \mathbf{0}$; $\quad \mathbf{R}^{-1}[0] = \frac{1}{c}\mathbf{I}_{L_{\hat{F}}}$ with c a small positive constant

$\bar{\mathbf{a}}[0] = \mathbf{0}$ or reflection coefficients $\kappa_i[0] = 0,\ i = 1, ..., L_A - 1$

For each time instant $k = 0, \ldots, \infty$**:**

$$u[k] = G(q)\left(y[k] - \hat{F}_0(q,k)u[k]\right)$$

Pre-filter the input-output data $u[k]$ *and* $y[k]$ *with* $A(q,k-1)$*:*

Compute $u_p[k] = A(q,k-1)u[k]$ and $y_p[k] = A(q,k-1)y[k]$:
Filter $u[k]$ and $y[k]$ through the lattice filter $\kappa_i[k-1]$

Update equation for $\bar{\mathbf{a}}$*:*

Compute $\epsilon[k] = y[k] - \hat{F}(q,k-1)u[k]$
Compute the reflection coefficients $\kappa_i[k]$, $i = 1, \ldots, L_A - 1$
by applying the Burg lattice algorithm (cf. Algorithm 1) to $\epsilon[k]$

Update equation for $\hat{\mathbf{f}}$*:*

$$\hat{\mathbf{f}}[k] = \hat{\mathbf{f}}[k-1] + \mathbf{R}_{\hat{\mathbf{f}}}^{-1}[k]\mathbf{u}_p[k] \underbrace{\left(y_p[k] - \hat{\mathbf{f}}^T[k-1]\mathbf{u}_p[k]\right)}_{\epsilon_p[k]}$$

$$\mathbf{R}_{\hat{\mathbf{f}}}^{-1}[k] = \frac{1}{\lambda_{\hat{\mathbf{f}}}}\mathbf{R}_{\hat{\mathbf{f}}}^{-1}[k-1] - \frac{1}{\lambda_{\hat{\mathbf{f}}}^2}\frac{\mathbf{R}_{\hat{\mathbf{f}}}^{-1}[k-1]\mathbf{u}_p[k]\mathbf{u}_p^T[k]\mathbf{R}_{\hat{\mathbf{f}}}^{-1}[k-1]}{1 + \frac{1}{\lambda_{\hat{\mathbf{f}}}}\mathbf{u}_p^T[k]\mathbf{R}_{\hat{\mathbf{f}}}^{-1}[k-1]\mathbf{u}_p[k]}$$

Update the feedback canceller $\hat{F}_0(q) : \hat{F}_0(q,k+1) = \hat{F}(q,k)$

4. SIMULATION RESULTS

In this section, we compare the performance of the IV-AFC with the standard CAF algorithm and the PEM-AFC.

4.1. Set-up and performance measure

In the simulation, we have gradually changed the feedback path $F(q)$ from an initial $F_1(q)$ to a final $F_2(q)$ between sample number 60000 and 68000 (i.e., during 0.5 seconds for a sampling frequency $f_s = 16$ kHz) by means of interpolation. Figure 3 depicts the frequency responses of $F_1(q)$ and $F_2(q)$. The filter length L_F of $F_1(q)$ and $F_2(q)$ equals 50. The gain $|G(q)|$ has been set to 4. The delay d_f in $G(q)$ equals 30 samples, i.e., 1.9 msec. For $|G(q)| = 4$, the closed-loop system $\frac{G(q)}{1-G(q)F_2(q)}$ is unstable.

The forgetting factor λ in all algorithms was set to 0.9998. In the IV-AFC and the PEM-AFC, the filter $A(q)$ was updated by means of the Burg lattice algorithm with $\lambda_{\bar{\mathbf{a}}} = 1 - \frac{1}{160}$. The filter length $L_A = 21$, the filter length $L_{\hat{F}} = 50$. During adaptation, the feedback canceller $\hat{F}_0(q)$ was continuously updated by $\hat{F}(q)$.

To assess the performance of the feedback cancellation algorithms we use the misalignment $\zeta(\mathbf{f}[k], \hat{\mathbf{f}}[k])$ between the true and estimated feedback path $\hat{F}(q)$, defined as

$$\zeta(\mathbf{f}[k], \hat{\mathbf{f}}[k]) = \frac{\left\|\mathbf{f}[k] - \hat{\mathbf{f}}[k]\right\|_2^2}{\|\mathbf{f}[k]\|_2^2}. \tag{20}$$

4.2. Simulation results

Figure 4 depicts the misalignment of the CAF, the PEM-AFC and the IV-AFC as a function of time for a stationary speech-weighted

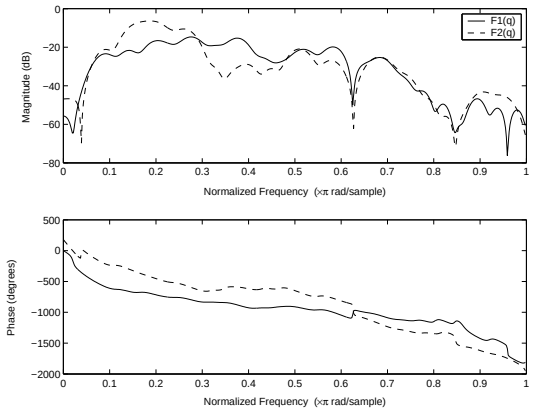

Fig. 3. Frequency response of the feedback path $F_1(q)$ and $F_2(q)$.

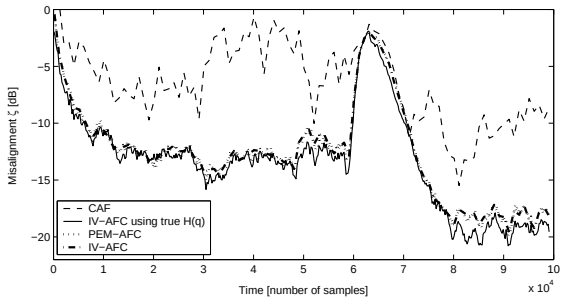

Fig. 4. Misalignment $\zeta(\mathbf{f}[k], \hat{\mathbf{f}}[k])$ of the CAF, the IV-AFC using the true $H(q)$, the PEM-AFC and the IV-AFC as a function of time. Stationary speech-weighted noise signal $x[k]$.

noise signal $x[k]$ created by passing Gaussian white noise through a 20-th order all-pole filter $H(q)$. For comparison, the IV method using the true desired signal model $H(q)$, which we consider in some sense an idealized solution, is also shown. The PEM-AFC and the IV-AFC clearly outperform the CAF and achieve the same performance as the idealized IV method with $A(q) = H^{-1}(q)$.

In a second example, $x[k]$ is a real speech signal consisting of sentences spoken by a male speaker. Figure 5 depicts the misalignment of the CAF, the PEM-AFC, the IV-AFC and the IV method that uses an AR model of the long-term average spectrum of the speech signal. Note that the white noise assumption for $w[k]$ is not completely satisfied anymore: the excitation $w[k]$ of voiced speech segments corresponds to an impulse train rather than white noise. As a result, the performance of the PEM-AFC and the IV-AFC is worse than for the stationary signal [4]. The IV-AFC outperforms the CAF and the IV method using the long-term average speech model. The PEM-AFC initially has the same performance as the IV-AFC. However, when the change in the feedback path $F(q)$ occurs (at sample 60000), the PEM-AFC suffers from instability due to a delayed adaptation, while the IV-AFC remains stable.

5. CONCLUSIONS

In this paper, we have derived an IV-AFC that is based on the autoregressive modelling of the desired signal. The IV-AFC offers better feedback suppression than the standard CAF for spectrally colored signals. In contrast to a previously proposed PEM-AFC, the IV-AFC does not suffer from stability problems when the adaptive feedback canceller is fast time-varying.

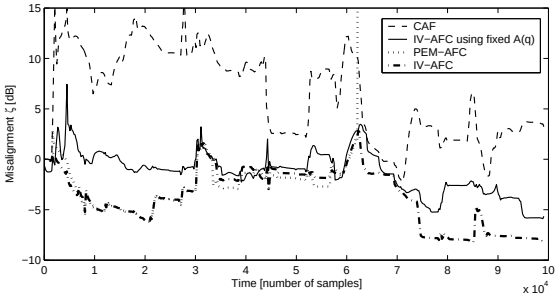

Fig. 5. Misalignment $\zeta(\mathbf{f}[k], \hat{\mathbf{f}}[k])$ of the CAF, the IV-AFC using a fixed $A(q)$, the PEM-AFC and the IV-AFC as a function of time. Real speech signal $x[k]$.

6. REFERENCES

[1] M. G. Siqueira and A. Alwan, "Steady-state analysis of continuous adaptation in acoustic feedback reduction systems for hearing-aids," *IEEE Trans. SAP*, vol. 8, no. 4, pp. 443–453, July 2000.

[2] J. Hellgren and U. Forssell, "Bias of feedback cancellation algorithms in hearing aids based on direct closed loop identification," *IEEE Trans. SAP*, vol. 9, no. 7, pp. 906–913, Nov. 2001.

[3] J. Hellgren, "Analysis of feedback cancellation in hearing aids with filtered-X LMS and the direct method of closed loop identification," *IEEE Trans. SAP*, vol. 10, no. 2, pp. 119–131, Feb. 2002.

[4] A. Spriet, I. Proudler, M. Moonen, and J. Wouters, "Adaptive feedback cancellation in hearing aids with linear prediction of the desired signal," Submitted. Available at ftp://ftp.esat.kuleuven.ac.be/pub/sista/spriet/reports/03-167.pdf

[5] M. Bouchard and S. Quednau, "Multi-channel recursive-least-squares algorithms and fast-transversal-filter algorithms for active noise control and sound reproduction systems," *IEEE Trans. SAP*, vol. 8, no. 5, pp. 606–618, Sept. 2000.

[6] H.-F. Chi, S. X. Goa, S. D. Soli, and A. Alwan, "Band-limited feedback cancellation with a modified filtered-X LMS algorithm for hearing aids," *Speech Communication*, vol. 39, no. 1-2, pp. 147–161, Jan. 2003.

[7] J. R. Deller, J. G. Proakis, and J. H. L. Hansen, *Discrete-Time Processing of Speech Signals*, Macmillan Publishing Company, Englewood Cliffs, New Jersey, 1993.

[8] L. Ljung and T. Söderström, *Theory and Practice of Recursive Identification.*, MIT Press, Cambridge, MA, 1983.

[9] U. Forssell, *Closed-loop identification - methods, theory and applications*, Ph.D. thesis, Linköping Universitet, Linköping, Sweden, 1999.

[10] P. Young, *Recursive estimation and time-series analysis*, Springer-Verlag, 1984.

[11] J. Makhoul, "Stable and efficient lattice methods for linear prediction," *IEEE Trans. ASSP*, vol. 25, no. 5, pp. 423–428, Oct. 1977.