Challenges and Opportunities for Introducing Basic Circuits and Systems in Electrical Engineering Education

Joos Vandewalle
Department of Electrical Engineering (ESAT)
Katholieke Universiteit Leuven B-3001 Leuven, Belgium
Joos.Vandewalle@esat.kuleuven.be

Abstract

Basic circuits and systems topics still are essential ingredients of electrical engineering education at most universities around the world. However these topics are under threat at many places in much the same way as the basic mathematics like linear algebra, differential equations, and analysis is threatened. This is caused by an urge for instant gratification from the side of the younger student generations. Of course, with the advent of computers, mobile phones, and internet, students handle information in ways that are essentially different from the past. Within this configuration new alternatives are needed. In mathematics a shortcut approach called "streetfighting mathematics" has been advocated. New methods of introducing circuits and systems have also been experimented with concepts like inventories, web based learning, activated learning, Conceive Design Implement and Operate CDIO learning, shortcuts in frequency domain concepts, and alternative ways of introducing concepts like first discrete time followed by continuous time.

1. INTRODUCTION

The paper is organized as follows. First we discuss the current state of affairs and trends of Electrical Engineering education in Section 2. In Section 3 we present a number of challenges related to CAS education. On the other hand in Section 4 a number of opportunities for CAS education are given. Finally we present a number of conclusions and recommendations in Section 5.

2. GENERAL TRENDS IN EE EDUCATION

The whole EE education builds strongly on the mathematical skills and insight of the students. Hence the skills, maturity and understanding in high school of subjects like algebra, geometry and trigonometry are very valuable. In the US the time and intensity devoted to these subjects is typically very low in high school, whereas in Europe this has been traditionally strong, but there is also a tendency to let is slip. However our society, and technology in particular need more mathematics nowadays. It is a fallacy to think that the extensive use of advanced calculators, and computers avoids the need for mathematical skills. Of course the mathematics used in these calculators and computers is hidden inside, and the users are lured away by a nice interface that hides the mathematics. However the ICT technology development and its use require a mathematical maturity from the designers and the users. Hence there is a need for a common action to stress the role of mathematics in our society and to motivate the high school students for these subjects. In engineering practice the mathematical language and skills are the basic way of expressing concepts and designs. This negative perception may also be a major reason for not choosing Science, Technology, Engineering, and Mathematics (STEM) studies after the high school. However there are good examples like Finland and Ireland that typically recruit 30% of STEM students in higher education, while many European countries only have figures around 20%. Moreover many engineering schools have a clear unbalance of female students typically less than 10 to 15%. This underrepresentation of female students is very widespread and persistent, even though the job market is happy to recruit female engineers, and many campaigns and despite actions launched to motivate female students for engineering.

In most European countries the 3 year bachelor and 2 year master system has been implemented in engineering according to the Bologna process. This brings the education in many countries of Europe more in line with the Anglo-Saxon world. But many countries do consider engineering degrees to require a buildup of knowledge and skills that requires 5 year of university education. In these models the bachelor degree brings the EE students only to a transfer level at which they can continue with a master study program in their own institute or in another university or country. Hence the bachelor degree is not directly intended for the job market.

Not only in the US, but also in several European countries one can perceive that students are less patient, and expect instant gratification. Their extensive and often also valuable use of computers and internet trains their minds to expect instant satisfaction to their requests or actions. This implies also that their attention span in lectures and educational processes is brief [1-3]. Hence the bachelor students need more argumentation and motivation for studying abstract but useful mathematics like linear algebra, and differential equations during the basic EE bachelor program. This certainly affects the way that CAS topics should be introduced to students.

3. CHALLENGES IN CIRCUITS AND SYSTEMS EDUCATION

As shown in figure 1, the circuits and systems education plays in most programs of EE a rather central role between on the one hand the basic sciences like mathematics and physics and on the other hand the subsequent courses of signal processing, control, electrical energy, biomedical circuits and systems, microwave and telecommunication systems. This position in EE was already

established around 1930 and has since not dramatically changed, but has been incrementally adapted to more complex systems, changing technologies and circuit designs and better computing and simulation facilities [4-15]. The CAS education often involves more lab oriented courses where students learn to analyse basic circuits and build these and measure these. This is often followed by a more mathematically oriented course on circuit and system analysis. In difficult times, like with the present economic crisis, department chairs or deans feel that this central role of such CAS courses implies that every professor of EE should be able to teach basic circuit and systems. This is however not suitable for improving the quality or the attractivity. Indeed it is experienced that the circuits and systems field has a number of dedicated expertises that are vibrant and necessary. Students feel the intrinsic motivation for basic circuits if it is taught by a CAS expert in the first year already.

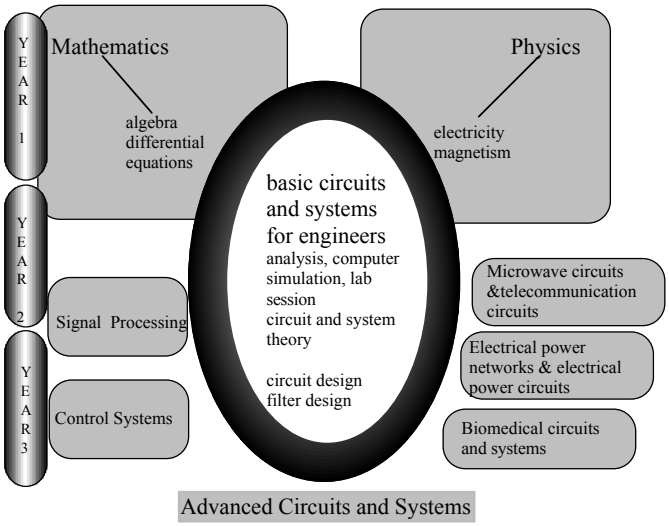

Figure 1. Central role of the Circuits and Systems education in the bachelor program in EE.

Moreover students should be prepared for companies and the ways these operate. Nowadays globalization often requires strong international cooperation, teamwork, communication and group dynamics. Certainly also laboratory skills and fluency with computers and simulation tools are also considered to be important.

Because many EE students do not like these mathematical aspects, there is some erosion on the basic CAS courses. Moreover at some universities there is very little attention to the mathematical analysis of circuits and systems, and classical textbooks like [10,11] have been abandoned. Of course more and more simulation tools are handy and efficient to use, and can avoid extensive analysis. Then the students are very quickly seduced to work with these simulation tools rather than being introduced to real basic circuit and systems concepts and methods like Helmholtz/Thévenin and Mayer/Norton equivalent, two port parameters, Bode diagrams, transfer functions, Tellegen's theorem, state space models, impulse responses… This is however a shallow approach to circuits and systems, and limits the insight to a level of technician. When a student however has obtained a deep understanding of the phenomena in basic linear circuits and systems it is very beneficiary in further design courses in electrical engineering. Moreover strong circuit and systems insights that the students gain in the process generalize very well to many other domains and strengthen their academic depth.

4. Opportunities in the teaching process of Basic CAS Concepts and Methods

A first opportunity consists in a *link for CAS to grand challenges of engineering and modern technological devices*. Students are nowadays extensively exposed to computers and internet, and digital equipment. Moreover recent attention in society for energy, and climate problems offer new opportunities for making CAS subjects attractive to the students. Hence, when students learn about circuits as networks containing components and exhibiting dynamical behavior, they build a conceptual and a practical insight into such systems [16,17]. This can serve as an ideal basis for understanding various issues related to complex systems in other fields of technology, such as biology, world economy, climate, and environment systems. This link may be used to motivate students and to broaden their views. CAS topics should also be used for teaching students to understand the impact of engineering on society and the ethical issues related to the use of technology in society.
In view of the serious shortage of engineers, attracting students to engineering should begin early. CAS can provide examples that are fun for twelve-year old kids, stimulate their creativity, and motivate them to later start engineering studies. Also the interest of female students can be enhanced with subjects that are closer to biological systems and societal issues. It is hence recommended to use some biomedical systems and circuits as examples, in order to increase the number of female students in EE. Also the methodologies of Yannis Tsividis [1-3] at Columbia University are quite convincing to expose the students at an early stage in their EE education to real circuits and their capabilities. This has also triggered a renewed interest in EE at this university.

As a second opportunity it should be mentioned that several mathematical intricacies of CAS are important in a correct use of the methods in practice. Hence through basic CAS courses students can obtain the *right mathematical rigor and precision* for their later professional career. Let us give some examples.

In most publications and textbooks one assumes either implicitly or explicitly that the one sided Laplace transform is used in order to be able to handle initial conditions of differential equation models of circuits or systems with the Laplace transform. Quite often students innocently learn in a course on circuits and systems that one can *convert a Laplace transform in a Fourier tansform by mechanically substituting the Laplace variable "s" by "jω"* with $j = \sqrt{-1}$. And indeed this is correct if the jω-axis is within the region of absolute convergence of the Laplace transform and if the signal that is transformed is zero for negative times. For signals like sinus functions or unit step function these conditions are not met, and hence the simple rule does not apply. A serious study of these Fourier transforms cannot be done based on the Laplace transform, but needs more specific understanding of distributions like Dirac functions. Hence a separate derivation of Fourier transforms of signals that do not satisfy these criteria is needed. We refer to solid textbooks like [10-14] for a correct treatment.

The single sided Laplace transform makes an integral from zero to infinity, but some confusion can arise if the signal has in the time domain a Dirac impulse $\delta(t)$ at 0. It is then not clear where the integration should start, either just before zero, which we call 0- or just after t=0, called 0+. In the first case the Laplace transform of a Dirac impulse is 1 and in the latter case it is 0. So it is a matter of convention which one to use, and afterwards to be consistent with the choice for later derivations like initial value properties or Laplace transform of the derivative of a function. More discussions on the use of Laplace transform and distributions (any derivatives of Dirac functions) are given in [15], [18]. Typically one has to solve a differential equation with initial conditions at the start of the system,

that we assume to be at t=0-. If the input contains a Dirac impulse at t=0 several authors [15], [18] advocate the use of the Laplace transform starting at t-. In doing so, one can use the Laplace transform to take into account all the intricacies that happen at t=0 between 0- and 0+. So there are *clear advantages in using the Laplace transform starting at 0-*.

A third opportunity is inspired from a recent alternative approach for teaching mathematics, called *street-fighting mathematics* [19]. Math is often presented so rigorously that it is feared rather than embraced by students. Hence mathematics is in this approach not taught in the regular deductive and very rigid way, but by teaching the art of guessing results and solving problems without an impulsive resort to proofs, or an obstinate insistence on exact calculations. The techniques that are advocated include extreme-case reasoning, dimensional analysis, successive approximations, discretization, generalization from specific cases, and pictorial analysis. The applications that they use to motivate the students include mental calculations, solid geometry, musical intervals, logarithms, integration, infinite series, solitaire, and differential equations. It can also be a fruitful path for the CAS education in the same way as visual examples of a circuit simulator applet [20] can have an impact on the progress of the insight of the students. In order to clarify the approach, let us have a look at an example in algebra [19] that illustrates how alternative formulations can be more effective and appealing to students. We are interested in producing an insightful proof of the property that *the algebraic mean (a+b)/2 of two positive numbers a and b is larger than or equal to their geometric mean* $(ab)^{1/2}$ *i.e.*

$$(a+b)/2 \geq (ab)^{1/2} \qquad (1)$$

For a simple but *algebraic-symbolic proof*, we start from the expression that is valid for all real a and b

$(a-b)^2=a^2-2ab+b^2\geq 0$.

By a magic trick 4ab is added on both sides. We obtain $(a+b)^2=a^2+2ab+b^2\geq 4ab$, which produces $(a+b)/2\geq (ab)^{1/2}$.

Although each step is simple, this proof is artificial and the sequence of steps is far from obvious. A geometric proof is more convincing.

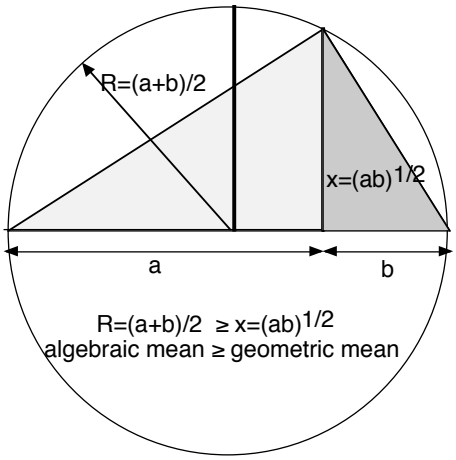

Figure 2. An intuitive geometric proof that the algebraic mean is larger than or equal to the geometric mean of two numbers. This geometric proof illustrates also the insight on the gap between the two means. They are close to each other when a≈b and very different from each other when a>>b.

For seeing that, one has to observe that the main triangle in Figure 2 is circumscribed by the circle and hence rectangular. Its hypothenusa is a+b and is a diagonal of the circle. The lighter and the darker subtriangles are also rectangular and are similar, so that a/x=x/b. This leads to $x=(ab)^{1/2}$. Clearly the radius R of the circle is larger than x and this proves $R=(a+b)/2\geq x=(ab)^{1/2}$. From this example the students gain insightful arguments that are mathematically correct.

A *first shortcut in basic CAS education is to introduce first discrete time systems and then continuous time systems*. Many textbooks start by introducing linear continuous time systems with concepts like impulse response, transfer function, poles zeros, Bode diagram,.. The reason for this choice in textbooks is first of all historical, because these concepts have first been derived for continuous time systems, before they were established for discrete time systems. However students encounter intrinsically more difficulties in these concepts, since they require the understanding of unnatural continuous time signals like the Dirac impulse, and the solution of differential equations with Dirac impulses. It is advocated here to take the simpler approach of first introducing all the concepts like convolution, impulse response, transfer function, poles zeros, Bode diagram,.. for discrete time systems and later generalize it for continuous time systems. Indeed for discrete time systems the notion of an impulse does not require a limit of a block wave of unit area with duration going to zero, but just a very simple and easy to generate discrete time signal that is 1 at t=0 and 0 elsewhere.

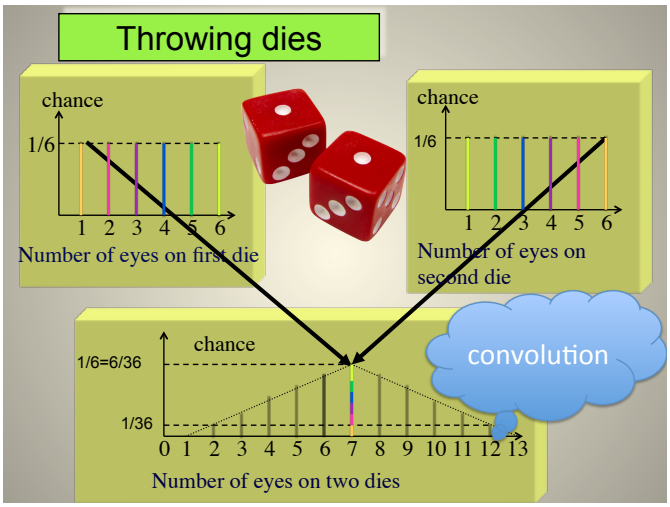

Figure 3. The discrete convolution of two sequences illustrated with the distribution of throwing 2 dies and counting the sum of the eyes. The seven eyes can be obtained in 6 combinations of positions for the two dies: 1+6,2+5,3+4,4+3,5+2,6+1

Moreover discrete time systems tie in very nicely with the digital systems and computer systems and the simulation tools on digital computers. An illustration of the simplicity of introducing the convolution of discrete time signals is given in Figure 3. The discrete convolution of two block signals and many others can be actively and visually studied with an applet on the website [21] the joy of discrete convolution. It naturally leads to a z-transform as shown in Figure 4.

z-transform converts convolution into a product

Example: Given the two signals cfr dies

$u[k]=v[k]=\{0,1/6,1/6,\ 1/6,1/6,\ 1/6,1/6,0,0\}$

Make a polynomial in z^{-1} i.e. take the z-transform

$U(z)=V(z)=(1/6)(\ z^{-1}+z^{-2}+z^{-3}+z^{-4}+z^{-5}+z^{-6})$

z-transform converts convolution w[k]=u[k]*v[k] into the product of their z-transforms

$W(z)=U(z).V(z)=[(1/6)(\ z^{-1}+z^{-2}+z^{-3}+z^{-4}+z^{-5}+z^{-6})]\ .[(1/6)(\ z^{-1}+z^{-2}+z^{-3}+z^{-4}+z^{-5}+z^{-6})]$

$=(1/36)\ )(\ z^{-2}+2z^{-3}+3z^{-4}+4z^{-5}+5z^{-6}+6z^{-7}+5z^{-8}+4z^{-9}+3z^{-10}+2z^{-11}+z^{-12})$

with inverse z-transform cfr dies

$w[k]=\{0,\ 0,\ 1/36,\ 2/36,\ 3/36,\ 4/36,\ 5/36,\ 6/36,\ 5/36,\ 4/36,\ \ 3/36,\ 2/36,\ 1/36,\ 0,\ 0,...\}$

Figure 4. The z-transform naturally converts a convolution of two sequences into a product of their polynomials in z^{-1} (their z-transforms). This is precisely the mechanism for multiplying two polynomials that involves the convolution of their coefficient series.

Another interesting *shortcut to the concept of transfer function* is provided by the direct teaching methods of systems as advocated by Babak Ayazifar [22] at U.C.Berkeley (see Figure 5). This has been strongly appreciated by the students. With only some knowledge of complex numbers it can be shown that the complex exponential signals are eigenfunctions of linear systems. Hence to an input of a complex exponential the system produces an output that is also the same complex exponential multiplied by the eigenvalue, that is the transfer function H. This can already introduced to students in the first year of EE, and can also be experimented with in a lab session.

Shortcut for transfer function

calculate response for an arbitrary cosine input

$\cos(\omega\pi k)=\mathrm{Re}(e^{j\omega\pi k})$

linear time-invariant system :
complex input $u[k]=e^{j\omega\pi k}$ produces complex output $y[k]=He^{j\omega\pi k}$
i.e. the input multiplied by H the transfer function
i.e. complex exponential = eigen-function for linear time-invariant systems with transfer function H as eigenvalue

example

Set $u[k]=e^{j\omega\pi k}$ $y[k]=He^{j\omega\pi k}$ in the difference equation of the system

$$2y[k+1]+y[k]=u[k]$$

Then $2He^{j\omega\pi(k+1)}+He^{j\omega\pi k}=e^{j\omega\pi k}$ or $2He^{j\omega\pi}+H=1$

or $H=1/(2e^{j\omega\pi}+1)$

hence $y[k]=[1/(2e^{j\omega\pi}+1)]e^{j\omega\pi k}$

H=transfer function

Figure 5. A shortcut derivation of the transfer function of a linear discrete time system.

Another interesting *shortcut is a well known one namely the Thévenin/Helmholtz (T/H) and Norton/Mayer (N/M) theorems*. Most textbooks in basic circuit theory, like [8-14], have an extensive discussion of these equivalents. The basic form of the T/H (resp. N/M) theorem states that any combination of voltage sources, current sources and linear resistors can be reduced to a series connection of a voltage source v_{OC} and a resistor R (resp. parallel connection of a current source i_{SC} and a conductance G) (see Figure 6).

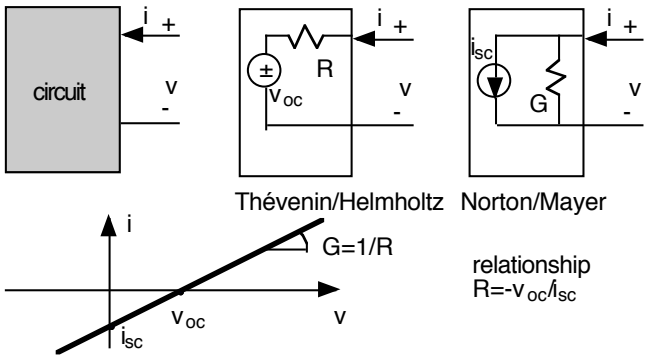

Figure 6. The Thévenin/Helmholtz and Norton/Mayer equivalent one ports.

In the applet webpage [20] a nice example is given of a scary looking interconnection of voltage sources and current sources and resistors, that can be replaced by a single voltage source in series with a resistor by this theorem. The remarkable property is that the equivalent resistor R is not a physically present resistor, but an equivalent as seen by the port. So when the port is loaded with a capacitor C (resp. an inductor L), the time constant of the circuit is determined by RC (resp. R/L) in other words, the capacitor sees from the circuit of the one port only the equivalent resistor R. This value R for the equivalent resistor can be obtained by making in the circuit all voltage sources zero (i.e. short circuits) and all current sources zero (i.e. open circuits) and by measuring (or calcultating) the resistance between the two terminals of the one port. The voltage source v_{OC} (resp. current source i_{SC}), can be measured (or calculated) as the voltage across the one port when it is open i.e. i=0 (resp. as the current through the one port when it is shorted i.e. v=0). There are two important remarks concerning the validity of the theorem. First these equivalents are extremely general, but they depend critically *on the linearity of the components*. Actually there are a couple of interesting relationships between the T/H an N/M theorems, that stem from the basic fact that all three one ports of Figure 6 are described by the same straight line characteristic in the i-v plane. So only 2 out of the three parameters R=1/G, v_{OC}, and i_{SC} should be measured or calculated, and the third follows from these two with

$$i=Gv+i_{SC} \qquad v=Ri+v_{OC}. \qquad (2)$$

5. Conclusion and Recommendations

Every new generation of students poses new challenges to our pedagogical approach and practice. Serious redesign of CAS education using pedagogical techniques that meet the needs of current and prospective students is inevitable. We advocate a hybrid approach to the teaching of circuits, signals, and systems—one rooted in interdisciplinary thinking and practice, and augmented by sound practical components and assessment tools. This, however, does imply a limitation to cookbook recipes. Rather, a solid academic teaching, and deeper understanding of these topics is advocated that takes profit of the several opportunities mentioned in the paper. Within the IEEE CAS Society the Technical Committee on CAS Education and Outreach: CASEO http://ieee-cas.org/community/technical-committees/caseo-tc stimulates an

open discussion on this topic. There are several recommendations: Collect material related to the education issues. Stress the role of mathematics in our society and the need for high school students to invest time and effort. Promote group-based design projects that stimulate active learning and more generally the CDIO Conceive, Design, Implement and Operate framework [24,25]. Teaching CAS should be done by CAS specialists and should be attractive and should stimulate the thinking process. CAS teachers should have good practices like designing "structure" in developing geometric interpretations of the various concepts, providing examples from applications and including historical facts to help students reflect about the origin of the field and to introduce open problems.

ACKNOWLEDGMENT

We are grateful to our colleagues who have participated in the IEEE CAS Society Technical Committee on CAS Education and Outreach for many stimulating discussions. We also acknowledge financial support from the Research Council K.U. Leuven (GOA MANET, CoE EF/05/006) and the Belgian Federal Science Policy Office (IUAP DYSCO).

REFERENCES

[1] Y. Tsividis, "Some thoughts on introducing today's students to electrical engineering," IEEE CAS Newsletter, vol. 9, no. 1, p. 1, 6–7, Mar. 1998.

[2] Y. Tsividis, "Turning students on to circuits", IEEE CAS Magazine, Vol. 9. No 1, First Quarter 2009, pp. 58-63.

[3] Y. Tsividis, "Teaching circuits and electronics to first-year students," Proc. IEEE Int. Symp. Circuits and Systems, Monterey, CA, May/June 1998, pp. 424-427.

[4] F. Terman, "A brief history of electrical engineering education," Proceedings of the IEEE, vol. 64, no. 9, Sept. 1976, pp. 1399–1406, reprinted in Proceedings of the IEEE, vol. 86, no. 8, Aug. 1998, pp. 1792–1800.

[5] W. L. Everitt, "Engineering education-circa 2012 A.D.," Proceedings of the IEEE, vol. 87, no. 8, Aug. 1999, pp. 1397–1398.

[6] T. N. Trick, "Update on engineering education-circa 2012 A.D.," Proceedings of the IRE, vol. 50, no. 5, May. 1962, pp. 571–572, reprinted in Proceedings of the IEEE, vol. 87, no. 8, Aug. 1999, pp. 1399–1403.

[7] R. Rohrer, "Taking circuits seriously," IEEE Circuits and Devices Magazine, vol. 6, no. 4, pp. 27–31, July 1990.

[8] E. Guillemin, Introductory Circuit Theory. New York: Wiley, 1953.

[9] M. Van Valkenburg, "Teaching circuit theory: 1934–1984," IEEE Transactions on Circuits and Systems, vol. 31, no. 1, Jan. 1984 pp.133–138.

[10] C. A. Desoer and E. S. Kuh, Basic Circuit Theory. New York, NY: McGraw-Hill, 1969.

[11] L. O. Chua, C. A. Desoer, and E. S. Kuh, Linear and Nonlinear Circuits. McGraw-Hill Series in Electrical Engineering: Circuits and Systems, New York: McGraw-Hill, 1987.

[12] W.-K. Chen (Ed.), The Circuits and Filters Handbook. CRC Press, 2nd edition, 2008.

[13] L.P. Huelsman, "*Basic circuit theory",* Prentice-Hall , 3rd ed. 1991, pp. 107-115.

[14] S. Karni, " *Applied circuit analysis*", New York, Wiley, 1988, p.121.

[15] T. Kailath, Linear Systems. Upper Saddle River, NJ: Prentice Hall, 1979.

[16] J. Fouke (Ed.), T. Bell, and D. Dooling, "*Engineering tomorrow, Today's technology experts envision the next century*". IEEE Press, 2000.

[17] F. Ulaby, and M. Maharbiz, "*Circuits*", NTS Press, 2009.

[18] K.H. Lundberg, H.R. Miller, and D. Trumper, "Initial conditions, generalized functions, and the Laplace transform; Troubles at the origin," IEEE Control Magazine, Feb.2007, pp. 22-35.

[19] S. Mahajan, "Street-fighting mathematics, the art of educated guessing and opportunistic problem solving", MIT Press, March 2010, ISBN-10:0-262-51429-X

[20] Falstad, Analog circuit simulator applet, http://www.falstad.com/circuit/e-resistors.html

[21] http://www.jhu.edu/signals/discreteconv/index.html

[22] B. Ayazifar, "Can we make signals and systems intelligible, interesting and relevant?", IEEE CAS Magazine, Vol. 9. No 1, 2009, pp. 48-58.

[23] J. Vandewalle, L. Trajkovic and S. Theodoridis, " Introduction and outline of the special issue on Circuits and Systems education : Experiences, Challenges and Views," IEEE CAS Magazine, Vol. 9. No 1, First Quarter 2009, pp. 27-33.

[24] http://en.wikipedia.org/wiki/CDIO

[25] http://www.cdio.org/