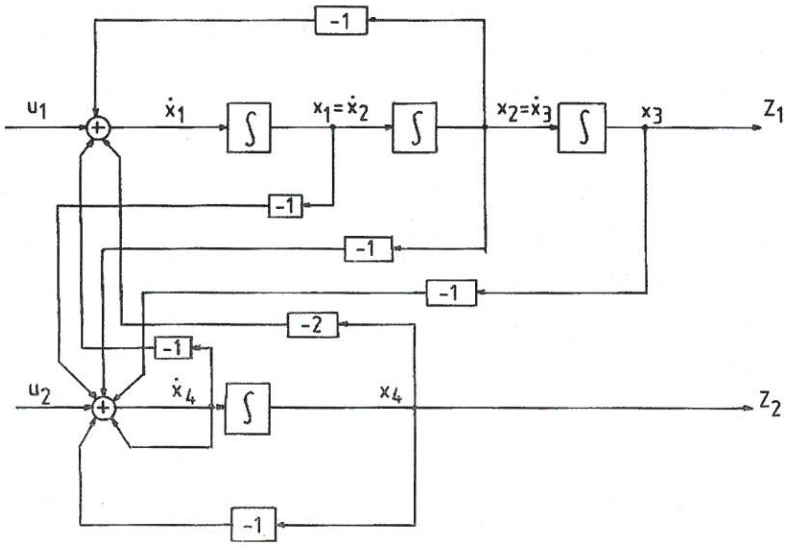

Fig.3. The complete simulation configuration for the example.

6. Conclusions

A general analog-computer simulation scheme for the pseudo-proper right MFD is presented. In fact, by a kind of dual argument, a scheme for the row pseudo-proper left MFD can be similarly obtained.

The importance of such a scheme is not confined to providing a simulation tool which solves the differential equation, it actually exhibits the fundamental nature of the system in a transparent way, and thus it enables to easily devise methods for both the analysis and synthesis problems of dynamical systems.

REFERENCES

H.H. Rosenbrock(1974), "Structural properties of linear dynamical systems", Int. J. Control, Vol.20, 191-202.

G.C. Verghese, B. Levy and T. Kailath(1981), "A generalized state-space for singular systems", IEEE Trans. Autom. Control, AC-26, 811-831.

W.A. Wolovich(1973), "The determination of state-space representations for linear multivariable systems", Automatica, Vol.9, 97-106.

S.H. Tan and J. Vandewalle(1986), "A realization algorithm for determining the generalized state-space systems", Int. J. Control (to appear).

87-29

A GEOMETRICAL STRATEGY FOR THE IDENTIFICATION OF STATE SPACE MODELS OF LINEAR MULTIVARIABLE SYSTEMS WITH SINGULAR VALUE DECOMPOSITION.

Bart De Moor ; Joos Vandewalle .

ESAT - KUL
Katholieke Universiteit Leuven
Kardinaal Mercierlaan 94
3030 Heverlee
Belgium
tel. 016/22 09 31
telex 25941 elekul

Abstract.

In this paper, a survey is given of geometrically inspired concepts for an identification strategy for multivariable linear time-invariant systems from noisy input - outputobservations. The properties of two important matrixequations and their relation with the singular value decomposition are studied. This permits to estimate the order and to identify the matrices of the state space model. Moreover, conditions for persistance of excitation of the inputs and the behavior of the algorithm when the data are perturbed by noise, can easily be studied from a geometrical point of view . The singular values allow to quantify these concepts.

1. Introduction.

The selection and the identification of appropriate mathematical representations is of central importance in the analysis of systems. With acces only to the external input-outputbehavior of a multivariate dynamical process, the internal structure (other than time invariance and linearity being unknown), the problem of constructing a model is a highly non-trivial task. Because of this complexity, reliable and robust general purpose identification schemes have not yet become a standard tool. In most cases, (experimental) observations on the input-output behavior of the system under normal operating conditions are readily available. The most obvious choice for a mathematical model is in a lot of cases a state space representation since the maior part of modern system and control theory, such as the design of observers , filters and optimal controllers regards this very efficient and compact representation.
In this paper, a survey is given of a novel identification approach that aims to avoid the several drawbacks of existing identification schemes (ref. [1]-[9])

2. Important input-output matrix equations.

In this section, we shall derive input-outputrelations that will be the essential for the identification approach to be presented furtheron. We consider linear, discrete time , multivariable time invariant systems with m inputs and 1 outputs, with state space representation:

$$\underset{nx1}{x_{k+1}} = \underset{nxn}{A} \cdot \underset{nx1}{x_k} + \underset{nxm}{B} \cdot \underset{mx1}{u_k}$$

$$\underset{lx1}{y_k} = \underset{lxn}{C} \cdot \underset{nx1}{x_k} + \underset{lxm}{D} \cdot \underset{mx1}{u_k}$$

(where necessary, matrix and vector dimensions will be indicated)
The matrices A,B,C,D are real, the index k denotes the discrete time and the vectors u_k,y_k and x_k are the input, the output and the state at time k. Furthermore, we will also frequently use the set of Markovparamaters H_i of the linear system, defined by $H_0=D$, $H_i=C.A^{i-1}.B$ $(i>0)$.
From manipulation of the state space system description, one can easily obtain the following important input-output matrix equations :

2.1. Input-outputrelation I.

$$Y_h(k,i,j) = X_0(k,i,j) + H_h(2,i,j-1).U_{tu}(j-1) + H_{tl}(i).U_h(k,i,j)$$

(The subscript 'h' denotes that the matrix has block Hankelstructure, 'tl' is block Toeplitz lower triangular, 'tu' block Toeplitz upper triangular.)
The matrices have the following structure:

$$Y_h(k,i,j) = \begin{bmatrix} y_k & y_{k+1} & y_{k+2} & \cdots & y_{k+j-1} \\ y_{k+1} & y_{k+2} & y_{k+3} & \cdots & y_{k+j} \\ y_{k+2} & \cdot & \cdot & \cdots & \cdot \\ \cdot & \cdot & \cdot & \cdots & \cdot \\ y_{k+i-1} & \cdot & \cdot & \cdots & y_{k+i+j-2} \end{bmatrix}$$

This is a li x j block Hankelmatrix constructed of i+j-1 consecutive output vectors.
The matrices $U_h(k,i,j)$ and $H_h(2,i,j-1)$ have a similar structure with input vectors resp. Markovparameters.
The matrix $X_h(k,i,j)$ is a li x j block Hankelmatrix :

$$X_h(k,i,j) = \begin{bmatrix} C.x_k & C.A.x_k & \cdots & C.A^{j-1}.x_k \\ C.A.x_k & C.A^2.x_k & \cdots & C.A^{j}.x_k \\ \cdot & \cdot & \cdots & \cdot \\ C.A^{i-1}.x_k & \cdot & \cdots & C.A^{i+j-2}.x_k \end{bmatrix}$$

The matrix $H_{tl}(i)$ is a li x mi lower triangular block Toeplitzmatrix that contains the i first Markovparameters :

$$H_{tl}(i) = \begin{bmatrix} D & 0 & 0 & \cdots & 0 \\ C.B & D & 0 & \cdots & \cdot \\ C.A.B & C.B & D & \cdots & \cdot \\ C.A^2.B & C.A.B & C.B & \cdots & 0 \\ \cdot & \cdot & \cdot & \cdots & D \\ C.A^{i-2}.B & C.A^{i-3}.B & \cdot & \cdots & \end{bmatrix}$$

The matrix $U_{tu}(j-1)$ is a (j-1)m x j upper triangular block Toeplitzmatrix :

$$U_{tu}(j-1) = \begin{bmatrix} 0 & u_k & u_{k+1} & u_{k+2} & \cdots & u_{k+j-2} \\ 0 & 0 & u_k & u_{k+1} & \cdots & u_{k+j-1} \\ \cdot & \cdot & \cdot & \cdot & \cdots & \cdot \\ 0 & 0 & \cdot & \cdot & \cdots & u_k \end{bmatrix}$$

One can observe that , for an initial state $x_k=0$, the output block Hankelmatrix Y_h is a nice 'symmetric' sum of two terms :
- first term = product of Markov parameter block Hankel and input block Toeplitz.
- second term = product of Markov parameter block Toeplitz and input block Hankel

2.2. Input - Outputrelation II.

A second relation which can easily be derived is:

$$Y_h(k,i,j) = \Gamma(i) \cdot X(k,j) + H_{tl}(i) \cdot U_h(k,i,j)$$

where now $\Gamma(i) = \begin{bmatrix} C \\ C.A \\ C.A^2 \\ \cdot \\ C.A^{i-1} \end{bmatrix}$ is the il x n 'extended' observability matrix

and $X(k,j) = [x_k\ x_{k+1}\ \cdots\ x_{k+j-1}]$ is the n x j matrix containing j consecutive states.

2.3. Geometrical interpretation of the input - outputrelations.

The geometrical observations to be presented will be the key tool in the analysis of the algorithm. They will provide insight in the mechanism of estimating the dimension of the observable part of the state space, in the conditions for persistant excitation of the input sequence, which has to ensure a reliable identification and in the noise sensitivity of the results.

Denote by $span_r(U_h)$, $span_r(Y_h)$, $span_r(U_{tu})$ the rowspace of the rowvectors of U_h, Y_h and U_{tu}.
It is assumed that the dimensions of the matrices U_h and Y_h are chosen such that $j > \max(li,mi)$ and $(j-mi) > n$.

The second input - output relation can be interpreted as follows:
$Span_r(Y_h)$ is the sum of two rowspaces:
- the row space of the row vectors of $\Gamma(i).X(k,j)$. $\Gamma(i)$ makes linear combinations of the rows of $X(k,j)$. It filters out the non-observable parts of the state . Hence, $span_r(\Gamma(i).X(k,j)) = span_r$[projection of $X(k,j)$ on observable subspace of state space]
- the row space of the row vectors of $H_{tl}.U_h$. When H_{tl} is nonsingular, then $span_r(H_{tl}.U_h) \subseteq span_r(U_h)$.

The first input-outputrelation has a similar interpretation:
Hereto decompose U_{tu} in two other matrices U_{tu1} and U_{tu2} such that $span_r(U_{tu1})$ is the projection of $span_r(U_{tu})$ onto $span_r(U_h)$

and $span_r(U_{tu2})$ is orthogonal to $span_r(U_h)$.(U_{tu1} and U_{tu2} are no longer block Toeplitz)
Then $Y_h = \Gamma(i).X_0 + H_h.U_{tu2} + H_h.U_{tu1} + H_{t1}.U_h$.

This can be visualised in a vector diagram, whereby each rowspace is represented by a vector

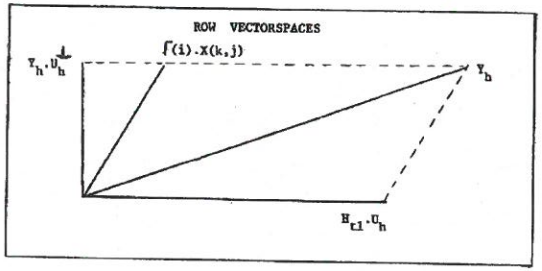

Fig.1. Geometrical representation of the second input - outputrelation . Each vector represents a row space.

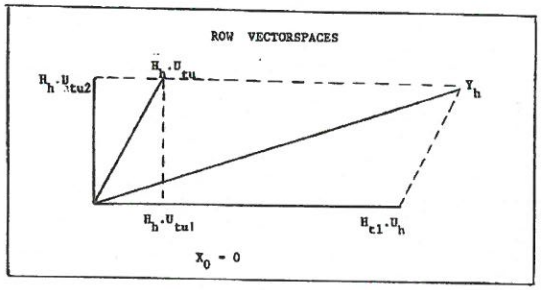

Fig.2. Geometrical representation of the first input - outputrelation. Each vector represents a row space.

The geometrical visualization of both input-outputrelations immediately suggest the following:
- the dimension of the observable part of the state space can be estimated from the dimension of the projection of the output rowspace upon the orthogonal complement of the row space of the input block Hankelmatrix.
The part of the rowspace of X(k,j) orthogonal to the row space of U_h can be considered as "new" information, caused by the dynamical action of the system. This information is not contained in the input. Hence, the part of the rowspace of Y_h which is orthogonal to the rowspace of U_h contains information about the dynamics of the system.
- the more orthogonal the rowspace of X(k,j) to the rowspace of H_h, the more information that is available in the projection.
Hence, it can be expected and will be confirmed furtheron, that the inputs are satisfactory for the identification whenever the rowspace of X(k,j) is "sufficiently" orthogonal to $span_r(U_h)$.

Moreover,it will be demonstrated that this also improves the noise insensitivity of the identification results.

3. The singular value decomposition (SVD).

While the geometrical visualization is crucial from a conceptual point of view, the singular value decomposition (SVD) is the key instrument in the explicit numerical solution of this identification scheme. In this paper, we will only give a brief summary of its main properties. Much more details can be found in [4].

3.1. Theorem of the singular value decomposition.

Every real m x n matrix A can be decomposed in three real matrices:

$$\underset{mxn}{A} = \underset{mxm}{U} \cdot \underset{mxn}{\Sigma} \cdot \underset{nxn}{V^t}$$

where U and V are orthogonal: $U.U^t=U^t.U=I_m$, $V.V^t=V^t.V=I_n$ and Σ is real, pseudo-diagonal with nonnegative diagonal elements:

$$\Sigma = \begin{bmatrix} \sigma_1 & 0 & \cdots & 0 & 0 & \cdots & 0 \\ 0 & \sigma_i & \cdots & 0 & 0 & \cdots & 0 \\ \vdots & \vdots & \ddots & 0 & 0 & \cdots & 0 \\ \vdots & \vdots & \cdots & \sigma_r & 0 & \cdots & 0 \\ 0 & \vdots & \cdots & 0 & 0 & \cdots & 0 \\ \vdots & \vdots & \cdots & \vdots & \vdots & \cdots & \vdots \\ 0 & \vdots & \cdots & 0 & 0 & \cdots & 0 \end{bmatrix}$$

and $\sigma_1 \geq \sigma_2 \geq \ldots \geq \sigma_r > 0$ and r is the algebraic rank of the matrix A.

The elements σ_i are the singular values of the matrix A, the columns of U (V) are the left (right) singular vectors.

3.2. Properties of the SVD.

The singular value decomposition is the most reliable way to estimate the rank of a matrix. It is very robust against perturbations and numerically reliable algorithms and software are nowadays available in most softwarepackages.
The singular values can be considered as a kind of "continuous rank measures": The smallest singular value measures in Frobeniusnorm the distance of the matrix from a matrix of lower rank .
In this identification context, the following geometrical properties of the SVD are important:
- The condition number, defined as $\sigma_1/\sigma_{min(m,n)}$, is of considerable importance in a lot of applications (see [4]). It will be used in this context to quantify the geometrical energy distribution of data vectors in a matrix. If the condition number is close to one, the the vector energy distribution is isotropic, i.e. equal in all directions of the vector space. If the condition number is very high, then there exist directions in the vectorspace that are not present in the vector signal (see [3] for more details).
- It will be shown that the estimation of the dimension of the observable part of the state space, is equivalent with a rank determination problem, for which the SVD will be applied.
- The left and right singular vectors of a matrix are orthonormal bases for the column and row space of that matrix .
- An important geometrical tool are the so-called "principal

angles" or "angles between subspaces", which are a natural generalization of the angle between two vectors. [4]
Let F be a p-dimensional and G be a q-dimensional subspace of R^m with $p \geq q$. The principal angles $\theta_1,\ldots,\theta_q$ are defined recursively by:

$$\cos(\theta_k) = \max_{u\in F}\max_{v\in G} u^t.v = u_k^t.v_k$$

subject to:

$$\|u\|_2 = \|v\|_2 = 1$$

$$u^t.u_i=0 \quad , \quad v^t.v_i=0 \qquad i=1,\ldots,k-1$$

When the columns of U_f and U_g are an orthonormal basis for F and G, then the cosines of the principal angles θ_k are the singular values of the product $U_f^t \,.\, U_g$.
The angles between subspaces allow to describe in a geometrical way the relative position of two subspaces. If they are the same, then all principal angles will be zero (singular values of $U_f^t.U_g$ equal to 1). If they are orthogonal, all singular values are 0. The number of singular values of $U_f^t.U_g$ equal to 1 is precisely the dimension of the intersection of the subspaces F and G. For more details we refer to [4].

4. The identification algorithm for noise free data.

4.1. The shift structure of the observability space.

As will become clear furtheron, the observability matrix $\Gamma(i)$ or rather its columnspace, will play an important role. The space spanned by its columns will be called the observability space. The following theorem shows that this space only depends upon the observable poles of the system .First we introduce some notation: If U is a mxn matrix, $\underline{U}$ ($\overline{U}$) will be a matrix with a reduced number of rows, obtained from U by omitting the last (first) blockrow. The precise number of rows to be omitted will be obvious from the context.

Theorem: If a matrix Y_{pxq} is of the form $Y = \Gamma(i).M$

with $\Gamma(i)$ the extended observability matrix and if $\text{rank}(Y)=\text{rank}(\Gamma(i))=n < \min(p,q)$ and if the columns of U_{pxn} form an orthonormal basis for the columnspace of Y, then the matrix T that satisfies $\underline{Y} \,.\, T = \overline{Y}$ has the same eigenvalues as the matrix A in $\Gamma(i)$.

Proof: omitted for brevity.

Corollary: Let the SVD of Y be : $Y_{pxq} = P_{pxn}\,.\,S_{nxn}\,.\,Q^t_{nxq}$ with $\text{rank}(Y)=\text{rank}(\Gamma(i))=n < \min(p,q)$. Then P_1, the first lxn block of P and the nxn matrix T satisfying $\underline{P} \,.\, T = \overline{P}$ are matrices similar to C and A in $\Gamma(i)$, i.e. there exists a nonsingular nxn matrix R such that $P_1 = C.R$ and $T = R^{-1}.A.R$.

This means that matrices similar to A and C can be found if a basis for the columnspace of $\Gamma(i)$ is known. How to compute such a basis follows immediately from the geometrical visualization in section 2 . The projection of the row space of

Y_h upon the orthogonal complement of the row space of U_h is under general conditions a space that posesses this shift property of the observability matrix.
This observation is exploited in the computation of the matrices A and C.

4.2. Computation of the state space matrices A and C.

- Choose the number of columns j of Y_h and U_h larger than $\max(mi,li)$. i must be an overestimation of i_0, the observability index of the system to be identified, while also $(j-mi) > n$
- Denote by $U_h^\perp$ the orthonormal matrix whose columnspace is the orthogonal rowcomplement of U_h i.e. $U_h.U_h^\perp = 0$.
- Postmultiply the second input - outputrelation with $U_h^\perp.(U_h^\perp)^t$

$$Y_h \,.\, U_h^\perp.(U_h^\perp)^t = \Gamma(i) \,.\, X(k,j) \,.\, U_h^\perp.(U_h^\perp)^t.$$

This is of course equivalent with orthonormalizing (e.g. with some Gram-Schmidt procedure) the rows of Y_h against the rows of U_h.
- It is not difficult to see that the rank of the matrix $Y_h.U_h^\perp.(U_h^\perp)^t$ will be equal to the dimension of the projection of the observable part of the state sequence contained in X(k,j) into the columnspace of $U_h^\perp$. Under general conditions to be discussed furtheron, this rank will precisely be equal to the dimension of the observable part of the ambient state space.
- The rank of $Y_h.U_h^\perp.(U_h^\perp)^t$ can be computed from the singular value decomposition . Let this SVD be :

$$Y_h.U_h^\perp.(U_h^\perp)^t = [P_1 \; P_2].\begin{bmatrix} S_1 & 0 \\ 0 & 0 \end{bmatrix}.\begin{bmatrix} Q_1^t \\ Q_2^t \end{bmatrix}$$

where P_1 is li x n, P_2 li x (li-n) , S_1 nxn , Q_1 j x n and Q_2 j x (j-n).
It now follows from the corollary in section 4.1. that the matrices A_t satisfying $\underline{P_1}.A_t = \overline{P_1}$ and C_t = first lxn blockrow of P_1 are a realization of the matrices A and C of the model.

4.3. Computation of the matrices B and D.

Using the matrix P_2 defined in section 4.2 and the pseudo-inverse U^+ of U_h, it can be found from the second input -outputrelation that

$$P_2^t \,.\, Y_h \,.\, U^+ = P_2^t \,.\, H_{tl}$$

This can be rewritten as an overdetermined set of linear equations in the unknowns B and D.

5. Geometrical conditions for the input sequence u_k.

5.1. The condition of persistant excitation.

The condition of persistant excitation is a condition for the inputsequence that ensures that all observable states are sufficiently present in the matrix X(k,j). It is obvious that only those modes of the state will be identified that are sufficiently present in the state behavior matrix X(k,j). Each

state vector can be described with components relative to the basis formed by the eigenvectors of the system matrix A, which are the fundamental modes of the system. Let the systemmatrix A have a eigenvaluedecomposition $A = P_a.J_a.P_a^{-1}$ where J_a is the Jordanform of A. The inputsequence will be called "sufficiently persistant exciting" if the condition number of the matrix $P_a^{-1}.X(k,j)$ is "sufficiently" close to 1.
The conditionnumber of the matrix $\Gamma_i.P_a$ is a measure for the degree of observability of the linear system.

5.2. The condition of rank cancellation.

If the input is sufficiently rich, than all observable states will be sufficiently present in the row space of the matrix X(k,j). However, one of the key tools in the identification strategy is the projection of the row space of X(k,j) onto the orthogonal complement of the row space of U_h.
If the row space of U_h and the row space of X(k,j) have a common subspace, then the dimension of the orthogonal projection of X(k,j) will be smaller than the dimension of the observable part of the state space. This phenomenon will be called "rank cancellation". It follows from the first and second input-outputrelation that:

$$\Gamma(i).X_0 + H_h(2,i,j-1).U_{tu}(j-1) = \Gamma(i) \; . \; X(k,j)$$

From the geometrical visualization, it is obvious that $span_r(X(k,j))$ must be as orthogonal as possible with respect to $span_r(U_h)$.
Assuming that the initial state $x_k=0$, it follows that it are the columns of U_{tu} that ensure that the state sequence X(k,j) is sufficiently orthogonal to the rowspace of U_h.
Hence it is natural to consider the principal angles between the rowspace of U_h and the rowspace of U_{tu} as quantitative measures of the effect of "rank cancellation".
The larger these angles, the more new information is contained in the dynamical behavior of the system, which was not yet present in the rowspace of the input Hankelmatrix U_h.
For single input - single output systems excited by an impulse, these principal angles are always orthogonal. This corresponds to the intuitive idea of an impulse as being the optimal identification signal.

5.3. Optimal dimensions i and j of the block Hankelmatrices.

In section 5.1. it was demonstrated that the imputsequence has to excite all observable modes of the system. In section 5.2. it was found that $span_r(U_{tu})$ must be as orthogonal as possible to $span_r(U_h)$.
In a lot of identification experiments, the inputsequence cannot be freely chosen and the identification has to be performed with a fixed available input.
In this case, it can be shown [3] that $span_r(X(k,j))$ becomes orthogonal with increasing probability to $span_r(U_h)$ for increasing "overdetermination" j/i .
A critical example is shown in figure 3 where the principal angles between $span_r(Y_h)$ and the orthogonal complement of $span_r(U_h)$ are shown for a second order system. For low overdetermination, the largest principal angle is almost 90 degrees and the system would be wrongly identified as a first order system. It is observed that the situation improves for increasing overdetermination j/i .

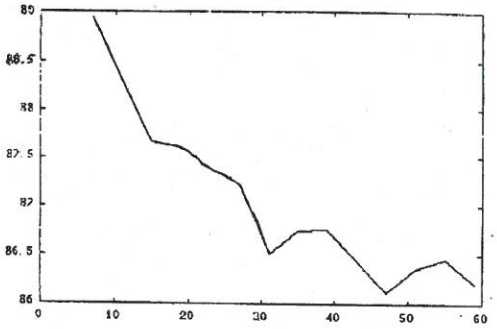

Fig.3. Largest canonical angle between the orthogonal complement U_h of $span_r(U_h)$ and $span_r(\Gamma(i).X)$ for a second order system where the number of blockrows i=5 and the number of blockcolumns j increases. The data are noiseless. The smallest canonical angle is small ($\pm 10^{-6}$) and is not shown . Observe that the largest principal angle decreases with increasing over-determination j/i. Hence, the row spaces $span_r(U_h)$ and $span_r(\Gamma.X)$ will become more and more orthogonal.

6. Identification with noisy data.

In this section we limit ourselves to the case of exact inputs and noisy outputs.
Let $\hat{U}_h$ be the exact input data block Hankelmatrix and $Y_h = \hat{Y}_h + \tilde{Y}_h$ where $\hat{Y}_h$ is the exact, $\tilde{Y}_h$ the pure noise and Y_h the measured block Hankelmatrix.
In the noiseless case with optimal conditions for persistant excitation and rank cancellation, only n principal angles between $span_r(\hat{U}_h)$ and $span_r(\hat{Y}_h)$ were different from 0 where n is the dimension of the observable part of the state space.
From a detailed mathematical analysis it can be proven that:
- for normally distributed noise, $span_r(\hat{Y}_h)$ will become more and more orthogonal to $span_r(\tilde{Y}_h)$ for increasing overdetermination j/i where i is the number of blockrows and j is the number of blockcolumns in the blockHankelmatrices.
- for fixed values of i and increasing values of j, the principal angles that were in the noiseless case zero, but now by the noise are not, will reach a saturation level because of the orthogonality between $span_r(\hat{Y}_h)$ and $span_r(\tilde{Y}_h)$.

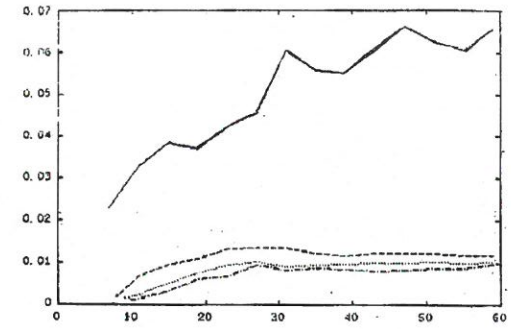

Fig.4. Smallest canonical angle for a system that in the noiseless case is second order. The largest canonical angle is much larger and is not shown. The number of blockrows i=5 and the number of blockcolumns j varies. Noise level on the outputsequence is 1 % while input is noiseless. Observe that the three canonical angles caused by the noise reach a 'saturation' level while the smallest 'true system' canonical angle keeps increasing. Hence it becomes more easy to estimate the true order for increasing overdetermination j/i.

8.Conclusions:

In this paper, a survey was given of geometrical concepts for a new identification strategy. The properties of the singular value decomposition are exploited to compute a state space model from noisy input -outputobservations. It was shown how the condition of persistant excitation can be translated in a geometrical framework.
Future work will be directed to a complete geometrical treatment of the identification scheme and to efficient numerical implementation of adaptive versions of the singular value decomposition for structured matrices.

9.References.

1. Astrom K.J., Eyckhoff P. System identification - A survey. Automatica, Vol.7, p.123-162, 1971.
2. Budin M.A. Minimal realization of discrete linear systems input-output observations. IEEE Trans. on Automatic Control, Vol. AC-16, no.5, october, p.395-401, 1971.
3. De Moor Bart. A geometrical strategy for the identification of state space models of linear multivariable systems with singular value decomposition. Internal report, ESAT - KUL, september 1986.
4. Golub. Matrix computations. North Oxford Academic Publishing Co., John Hopkins University Press, 1983.
5. Gopinath B. On the identification of linear time invariant systems from input-outputdata. The Bell System Technical Journal, Vol.48, May-June, no.5.,p.1101-1113, 1969.
6. Guidorzi R.P. Invariants and canonical forms for systems structural and parametric identification. Automatica, Vol.17, no.1., p.117-133, 1981.
7. Ho B.L., Kalman R.E. Effective construction of linear state variable models from input output functions. Regelungstechnik, Vol.14,pp545-548, 1966.
8. Kung S.Y. A new identification and model reduction algorithm via singular value decomposition. Proc. of the 12-th Asilomar Conf. Circ. Syst. Comp., Nov.,1978.
9. Liu R., Suen L.C. Minimal dimension realization and identifiability of input-outputsequences. IEEE Trans.on Automatic Control, Vol.AC- ,no. ,april p.227-232, 1977.
10. Zeiger H.P., McEwen A.J. Approximate linear realizations of given dimension via Ho's algorithm.IEEE Trans. on Automatic Control, Vol.AC-19, p153, 1974.

AUTOMATIC IDENTIFICATION MACHINES OF DYNAMIC SYSTEMS AND APPLICATIONS

Z.L. Deng and Y.X. Guo

Heilongjiang Applied Research Centre of Computer, Harbin, People's Republic of China

Abstract

This paper surveys Deng and Guo's approach of structure identification for multivariable CARMA models, and its applications to many different fields including self-tuning, adaptive filtering, prediction and control.

INTRODUCTION

In recent years, authors improved and developed exsisting modeling methods for the time series [1-4] . A complete and simple identification method of the parameter and structure for multivariable CARMA models has been proposed [5] . Based on the recursive extended least squares (RELS) parameter estimation, the F-test detectors for obtaining model order, suborder and time delay are given, and the parsimonious parameter models are also obtained. The corresponding software is also given[6], and is called automatic identification machines of dynamic systems.

IDENTIFICATION OF CARMA MODELS

Consider multivariable CARMA model

$$A(q^{-1})y(t)=B(q^{-1})u(t) + C(q^{-1})e(t) \qquad (1)$$

where $y(t)$ is the p x 1 output vector, $u(t)$ is the q x 1 input vector, $e(t)$ is the p x 1 gaussian white noise with zero mean, q^{-1} is the backward shift operator, $q^{-1}\ y(t)=y(t-1)$, $A(q^{-1})$, $B(q^{-1})$ and $C(q^{-1})$ are the polynomial matrices with the coefficient matrices A_i, B_i and C_i, respectively, i.e.,

$$A(q^{-1})=I - A_n q^{-1} - \dots - A_1 q^{-n}$$

$$B(q^{-1})=B_0 + B_1 q^{-1} + \dots + B_n q^{-n}$$