Katholieke Universiteit Leuven

Departement Elektrotechniek

ESAT-SISTA/TR 06-142

Resource allocation in ADSL variable length per-tone equalizers[1]

Prabin Kumar Pandey and Marc Moonen[2]

May 2008
Published in
IEEE Transactions on Signal Processing

[1]This report is available by anonymous ftp from *ftp.esat.kuleuven.be* in the directory *pub/sista/pkumarpa/reports/07-06resourcealloc.pdf*

[2]K.U.Leuven, Dept. of Electrical Engineering (ESAT), Research group SISTA, Kasteelpark Arenberg 10, 3001 Leuven, Belgium, Tel. 32/16/32 17 24, Fax 32/16/32 19 70, WWW: *http://www.esat.kuleuven.be/sista*. E-mail: *prabin.kumarpandey@esat.kuleuven.be*. This research work was carried out at the ESAT laboratory of the Katholieke Universiteit Leuven, in the frame of K.U.Leuven Research Council CoE EF/05/006 Optimization in Engineering, the Belgian Programme on Interuniversity Attraction Poles, initiated by the Belgian Federal Science Policy Office P5/11 ('Mobile multimedia communication systems and networks'),IWT project 060207: 'SOPHIA' and EU/Marie Curie project "SIGNAL".

Abstract

Per-tone equalization has been proposed as an alternative to time domain equalization in ADSL modems. It optimizes the bitrate performance of the system as each tone can be independently equalized. In a per-tone equalization based ADSL system a fixed length frequency domain equalizer is typically used for every tone. The ADSL channel has however a lower channel gain at high frequencies therefore using a longer equalizer for these frequencies does not result in a significant performance gain. With a fixed equalizer length, the length of the equalizer is then determined by the required length at the lower frequencies, hence a significant number of equalizer taps are wasted in the high frequency range without any performance gain. Using a variable length equalizer designed such that an overall performance criterion is optimized can significantly decrease the total number of equalizer taps without compromising performance. In this paper, a resource allocation technique for variable length equalizer design using a dual problem formulation is presented. This optimally solves the problem of equalizer length distribution over tones for given resource constraints, with a relatively low complexity.

Resource allocation in ADSL variable length per-tone equalizers

Prabin Kumar Pandey and Marc Moonen
Department of Electrical Engineering
Katholieke Universiteit Leuven, Belgium
Phone: +32 16 32 1924, Fax: +32 16 1970
{prabin.kumarpandey, marc.moonen}@esat.kuleuven.be

***Abstract*— Per-tone equalization has been proposed as an alternative to time domain equalization in ADSL modems. It optimizes the bit rate performance of the system as each tone can be equalized independently. In a per-tone equalization based ADSL system a fixed length frequency domain equalizer is typically used for every tone. The ADSL channel has however a lower channel gain at high frequencies therefore using a longer equalizer for these frequencies does not result in a significant performance gain. With a fixed equalizer length, the length of the equalizer is determined by the required length at the lower frequencies, hence a significant number of equalizer taps are wasted in the high frequency range without any performance gain. Using a variable length equalizer designed such that an overall performance criterion is optimized can significantly decrease the total number of equalizer taps without compromising performance. In this paper, a resource allocation technique is presented for variable length equalizer design using a dual problem formulation. This optimally solves the problem of equalizer length distribution over tones for given resource constraints, with a relatively low complexity.**

I. Introduction

Asymmetric Digital Subscriber Line (ADSL) modems use Discrete Multi-Tone (DMT) modulation. DMT divides the available spectrum into smaller parallel sub-bands or tones. Each tone corresponds to an orthogonal carrier. The input bit-stream is divided into several independent parallel streams which then QAM-modulate the different carriers. These QAM modulations are implemented based on an IFFT. A cyclic prefix is added to each resulting time domain symbol before transmission. If the cyclic prefix is shorter than the channel impulse response then this results in inter-symbol interference (ISI) and inter-carrier interference (ICI). Highly dispersive channels such as the ADSL channel have a very long channel impulse response hence to mitigate ISI/ICI a very long cyclic prefix is needed. As a long cyclic prefix results in a large transmission overhead, the solution is to use channel equalization to shorten the effective length of the channel impulse response [1] [2]. The usual time domain equalization (TEQ channel shortening) corresponds to a joint equalization of all the tones and hence cannot optimize the performance in every tone. A frequency domain equalization technique, known as per-tone equalization (PTEQ), was proposed in [4] in order to equalize each tone separately. It is then possible to optimize the overall bit rate using a suitable equalizer for every tone, without increasing the overall computational complexity.

In a per-tone equalization based ADSL system, typically every tone is equalized using a fixed length equalizer. The channel gain for the ADSL channel however varies for different tones, and so for a tone with low channel gain using a long equalizer does not increase its bit rate performance significantly. Therefore using a constant length equalizer for all tones may correspond to a waste of system resources (active equalizer taps). A better alternative is then to consider a variable length equalizer for every tone. One of the main problems is then to define conditions which effectively can be used to determine the required equalizer lengths. In [5], the length of the equalizers is determined by minimizing the MSE (Mean Squared Error) of the equalizer outputs. As the method tries to minimize the MSE for every tone, it allocates most equalizer taps to the tones that have a poor channel quality. In this paper we show that allocating longer equalizers to tones with a low channel gain does not improve the overall achievable bit rate of the system. Therefore the approach of [5] does not provide an efficient resource allocation. Furthermore it is hard to directly relate the average MSE of the equalizer outputs to the achievable bit rate of the system, which is more likely to be specified as a QoS constraint. Hence an alternative method is needed for optimizing the equalizer lengths, which distributes the taps more efficiently among the tones and which can easily incorporate global resource constraints such as bit rate in the optimization problem.

For a given constraint (total number of equalizer taps), the overall bit rate optimization problem can be turned into a dual problem using Lagrange multipliers. In this paper, an algorithm to determine the optimal equalizer lengths is proposed using this dual problem formulation.

In section II, a data model of the received signal is described and per-tone equalization in ADSL is reviewed. Then the impact of the length of the equalizers in the system performance is examined. In section III, a dual problem is formulated to represent the bit rate optimization problem under a global resource constraint (total number of equalizer taps). An algorithm to solve this dual problem will then be presented. Section IV contains some simulation results. Finally conclusion are presented in section V.

II. System Model

A. Data Model

The following notation is adopted in the description of the DMT system. $\{.\}^T$ denotes the transpose, N is the size of the (I)DFT and ν represents the length of the cyclic prefix. i, k denote the tone index and DMT symbol index respectively. $\mathcal{F}_N$ and $\mathcal{I}_N$ are the N-point DFT and IDFT matrices where $\mathcal{F}_N(i,:)$ is the ith row of $\mathcal{F}_N$. T is the fixed length of the per-tone equalizer and the equalizer coefficients vector for tone i is $\mathbf{v_i}$. $\mathbf{I_Q}$ and $\mathbf{0_Q}$ are the $Q \times Q$ identity and zero matrix respectively. $X_i^{(k)}$ is a complex subsymbol on tone i ($i = 1 \cdots N$) to be transmitted at symbol period k. $X_{1:N}^{(k-1)}$, $X_{1:N}^{(k)}$ and $X_{1:N}^{(k+1)}$ are the symbols of length N at time instants $k-1$, k and $k+1$ respectively. y_k represents the received signal and n_k represents

This research work was carried out at the ESAT laboratory of the Katholieke Universiteit Leuven, in the frame of K.U.Leuven Research Council CoE EF/05/006 Optimization in Engineering, the Belgian Programme on Interuniversity Attraction Poles, initiated by the Belgian Federal Science Policy Office P5/11 ('Mobile multimedia communication systems and networks'),IWT project 060207: 'SOPHIA' and EU/Marie Curie project "SIGNAL". The scientific responsibility is assumed by its authors.

the additive noise at sample instant k. Finally, $s = N + \nu$ and $\mathbf{h} = [h_L \cdots h_0 \cdots h_{-k}]$ is the channel impulse response in reverse order.

The received signal can be modeled as

$$\begin{aligned}
&\overbrace{\begin{bmatrix} y_{ks+\nu-T+2+\delta} \\ \ddots \\ y_{(k+1)s+\delta} \end{bmatrix}}^{\mathbf{y}} \Big\updownarrow N+T-1 \\
&= \left[\begin{array}{c|ccc|c} & \mathbf{h} & 0 & \cdots & \\ \mathbf{0} & \ddots & \ddots & \ddots & \mathbf{0} \\ & 0 & \cdots & \mathbf{h} & \end{array}\right] \begin{bmatrix} \mathbf{P} & \mathbf{0} & \mathbf{0} \\ \mathbf{0} & \mathbf{P} & \mathbf{0} \\ \mathbf{0} & \mathbf{0} & \mathbf{P} \end{bmatrix} \\
&\begin{bmatrix} \mathcal{I}_N & \mathbf{0} & \mathbf{0} \\ \mathbf{0} & \mathcal{I}_N & \mathbf{0} \\ \mathbf{0} & \mathbf{0} & \mathcal{I}_N \end{bmatrix} \overbrace{\begin{bmatrix} X_{1:N}^{(k-1)} \\ X_{1:N}^{(k)} \\ X_{1:N}^{(k+1)} \end{bmatrix}}^{\mathbf{X}} \\
&+ \overbrace{\begin{bmatrix} n_{ks+\nu-T+2+\delta} \\ \vdots \\ n_{(k+1)s+\delta} \end{bmatrix}}^{\mathbf{n}} \\
&= \mathbf{HX} + \mathbf{n}
\end{aligned} \tag{1}$$

Here δ is the synchronization delay and is a design parameter. Matrix $\mathbf{P}$ adds the cyclic prefix and is given as

$$\mathbf{P} = \left[\begin{array}{c|c} \mathbf{0} & \mathbf{I}_\nu \\ \hline \multicolumn{2}{c}{\mathbf{I}_N} \end{array}\right]$$

In (1), the kth symbol is the symbol of interest, the $(k-1)$th and the $(k+1)$th symbol have been used to fully describe the ISI. $\mathbf{y}$ is the input at the front end of the receiver. For further details on the used data model we refer to [4].

B. Per-tone Equalization

Per-tone equalization (PTEQ) moves the standard time-domain equalization channel shortening operation into the frequency domain and can be specified as follows [4].

$$Z_i^{(k)} = \mathbf{v}_i^T \underbrace{\left[\begin{array}{ccc} \mathbf{I}_{T-1} & | \mathbf{0} & | -\mathbf{I}_{T-1} \\ \hline \mathbf{0} & | \mathcal{F}_N(i,:) & \end{array}\right]}_{\mathbf{F}_i} \mathbf{y} \tag{2}$$

where $\mathbf{v}_i^T$ is the vector representing the T-tap per-tone equalizer for tone i, $Z_i^{(k)}$ is the equalizer output for tone i at time k. $\mathbf{F}_i$ is a $(T-1)\times(N+T-1)$ matrix. The first block row in matrix $\mathbf{F}_i$ in (2) extracts the so-called difference terms, while the last row corresponds to the usual FFT operation in the receiver. **Figure 1** shows a general structure for a per-tone equalizer as given by (2).

For each tone a MMSE-PTEQ can be identified by minimizing the cost function $J(\mathbf{v}_i)$ in (3). This MMSE-PTEQ then optimizes the SNR for each tone separately.

$$\min_{\mathbf{v}_i} J(\mathbf{v}_i) = \min_{\mathbf{v}_i} \varepsilon \left\{ \left| \mathbf{v}_i^T \mathbf{F}_i \mathbf{y} - X_i^{(k)} \right|^2 \right\} \tag{3}$$

C. Effect of Equalizer length

The general per-tone equalizer structure of [4] uses a fixed number (T) of equalizer taps for all the tones. The higher frequency part in the ADSL spectrum has lower channel gains, therefore using longer equalizers does not result in a significant performance gain at these high frequencies. This is shown in **Figure 2**. In most of the tones a shorter equalizer can achieve almost the same performance as a longer equalizer. This highlights that a significant portion of the system resources may be wasted without any performance gain.

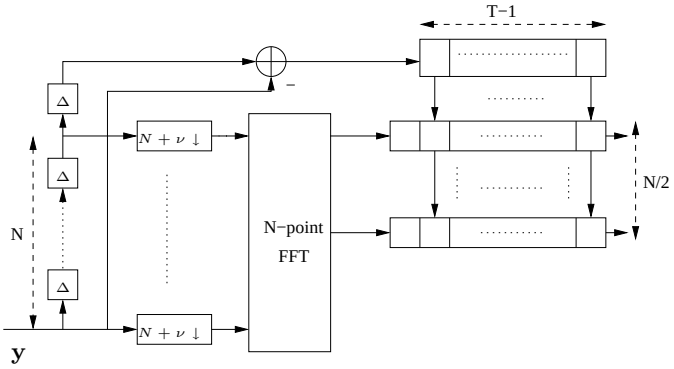

Fig. 1. T-tap per-tone equalizer model [4]

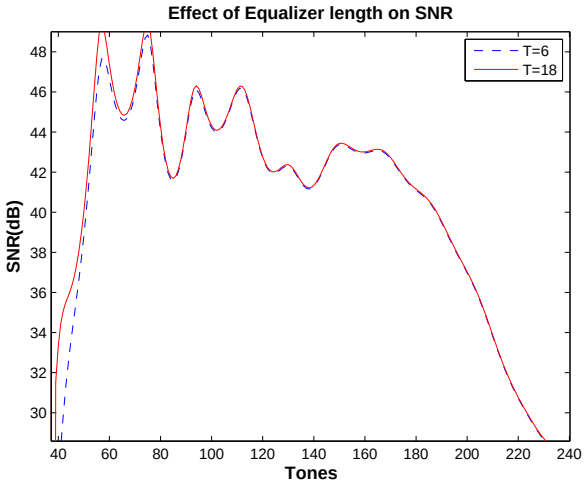

Fig. 2. Comparison of signal to interference and noise ratio per tone for different PTEQ equalizer lengths for a typical ADSL scenario

III. Dual Problem Formulation

In the previous section, the disadvantage of fixed/uniform length equalizers over variable length equalizers was highlighted. The main problem with the use of variable length equalizers is to calculate the equalizer lengths such that the system performance is optimized. One possibility is to perform an exhaustive search for all the tones over all possible equalizer lengths. Even though it can be implemented with a simple algorithm, this method has a prohibitively high complexity.

Another method was suggested in [5], which minimizes the MSE at the output of the equalizers by changing the length of the equalizers. While trying to minimize the average MSE, it allocates most of equalizer taps to the tones that have a poor channel quality to improve the MSE. From **Figure 2** it is clear that allocating longer equalizers to tones with a lower channel gain does not improve the overall achievable bit rate of the system. Therefore the approach of [5] does not provide an efficient allocation. Furthermore it is hard to directly relate the average MSE of the equalizer outputs to the achievable bit rate of the system, which is more likely to be specified as a QoS.

We present an alternative approach that is based on restating the optimization problem as a dual problem. Similar dual problem

formulations have been used for various optimization problems in DSL such as dynamic spectrum management (DSM) [6], cross-talk cancellation [7] etc.

The bit rate for a particular tone is an monotononically increasing function of the equalizer length. After a rapid initial bit rate gain further increase in equalizer lengths only result in marginal bit rate gain. Therefore this problem can be stated as a maximization problem with the overall bit rate as the objective function and where the total number of available equalizer taps to be distributed among the tones sets an addition of constraint. Our optimization problem can be written as

$$\begin{array}{ll} \max\limits_{C_1 \cdots C_N} & \sum_i R_i \\ \text{s.t.} & \sum_i C_i < T_{\text{budget}} \end{array} \tag{4}$$

where,

$$R_i = F_s \log_2 \left(1 + \tfrac{\text{SNR}_i}{\Gamma}\right)$$

where R_i is the achieved bit rate on tone i, F_s is the sampling frequency, Γ is SNR gap, C_i is the length of the equalizer for tone i and T_{budget} is the predefined maximum total number of equalizer taps which have to be distributed among all the tones. SNR_i is the SNR obtained for tone i, as a function of its equalizer length C_i, based on (3) and (1).

The dual problem formulation for (4) can be written as,

$$\min_{\lambda} \left\{ \max_{C_i}(L) \right\} \quad \text{subject to } \lambda \geq 0 \tag{5a}$$

where

$$L = \sum_i R_i + \lambda(T_{\text{budget}} - \sum_i C_i) \tag{5b}$$

and where λ is known as the Lagrange multiplier and L is the Lagrangian. The dual problem is known to be convex and so has a unique minimum λ^*. In [9] it is shown that for problem like (4), the duality gap is zero, which means that the dual problem with $\lambda = \lambda^*$ provides the globally optimal tap allocation of problem (4), with $\sum_i C_i = T_{budget}$.

It is seen that for a given value of λ the optimization (5b) is equivalent to the optimization of the equalizer length for each tone separately which can be written as

$$\max_{C_i}(L_i) \quad \text{where } L_i = R_i - \lambda C_i \tag{6}$$

where L_i is the per-tone Lagrangian, and λC_i represents the penalty for increasing the equalizer length (C_i) for tone i. This per-tone optimization problem (for given λ) is readily solved by exhaustively searching over all possible values of C_i. The individual cost functions calculated from equation (6) can be added together to obtain the total cost function for a particular λ. The value of λ can then be adjusted until $\sum_i C_i$ matches T_{budget}. An algorithm to implement this optimization technique is given below. The complexity of the proposed algorithm is $\mathcal{O}(M * T_{\text{max}})$ per update of λ, where M and T_{max} are the number of used tones and the maximum number of equalizer taps that can be assigned for each tone.

There are many ways to search the optimal value of λ, such as the bisection method, the gradient descent method etc. [6] [7]. In [7], the update of λ is based on the difference between the total available system resources and the used system resources for the current value of λ. For our problem this can be written as,

$$\lambda^{t+1} = \lambda^t - \mu(T_{\text{budget}} - \sum_i C_i) \tag{7}$$

where λ^c is the value of λ at cth iteration, μ is a scaling factor, whose value can be changed in order to obtain a faster convergence to the solution as well as to ensure that λ^{t+1} remains positive. For simplicity, in our simulations μ is taken as a fixed arbitrary value close to zero (ϵ_2). For further details of the algorithm we refer to [7].

The initial value of λ can be small value close to zero (ϵ_1). Clearly, $\lambda = 0$ is the case when there is no penalty for increasing the equalizer length. Due to the monotonically increasing nature of bit rate as a function of equalizer length each tone will use the maximum equalizer length that can be assigned to it which is not practical but a value close to zero is a good starting point. In the presented algorithm a search over the equalizer length for a particular tone and for a fixed λ is terminated when either the maximum number of taps that can be allocated is reached or when the cost function for a particular equalizer length is lower than that for the previous length. This follows from the fact that the bit rate is a monotonically increasing function of the equalizer length and hence that L_i is a concave function of C_i. A complete algorithm description is given in the table below.

Algorithm: Optimization of per-tone equalizer length

```
Initialize λ = ε1, μ = ε2
repeat
    For i ∈ {used tones}
        L_i = 0
        C_i = 0
        For T = 1 ··· T_max
            If L_i > R_{i,T} − λT
                C_i = T − 1
                break
            End If
            L_i = R_{i,T} − λT
            C_i = T
        End For
    End For
    T_total = Σ_i C_i
    λ = λ − μ(T_budget − Σ_i C_i)
while(T_total ≠ T_budget)
```

Here $R_{i,T}$ is the bit rate associated with the i-th tone and per-tone equalizer of length T.

IV. Simulation Results

The simulation results presented next refer to the ADSL environment. In these simulations, the synchronization delay δ has not been considered. Simulations were performed on different standardized ADSL channel models (CSA loops) [8]. The bit error rate probability has been fixed to 10^{-7}, the coding gain and the noise margin are 3 dB and 6 dB respectively. The signal and noise PSD (power spectral density) levels are -40dB and -140 dB respectively. Three consecutive symbols are considered to account for the ISI. The channel is assumed to be known perfectly at the receiver. The first 38 tones are unused. For the variable length per-tone equalizer the maximum number of equalizer taps per tone (T_{max}) is 20.

Figure 3 and **4** show the bit rates versus total number of equalizer taps for two different CSA loops. For most of the tones the bit rate saturates for a small equalizer length as was shown in **Figure 2**. The total number of equalizer taps needed to obtain a similar bit rate performance therefore decreases significantly compared to the fixed length (e.g. 16 taps) equalizer case. The reduction is 50% to 60% (e.g. from 16(256-38)=3488 taps to 1318 taps in **Figure 3**) in the present cases, which is spectacular. It is clear from **Table I** that the method presented in this paper is much more efficient in distributing equalizer tap than the method presented in [5].

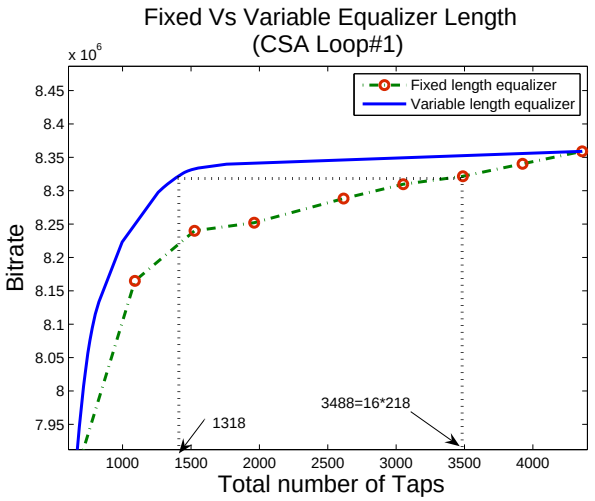

Fig. 3. Comparison between the total number of equalizer taps needed to achieve the same bit rate performance for fixed length and optimized length equalizers in CSA loop 1 (for the fixed length equalizer, the total number of taps is 218*number of taps per tone)

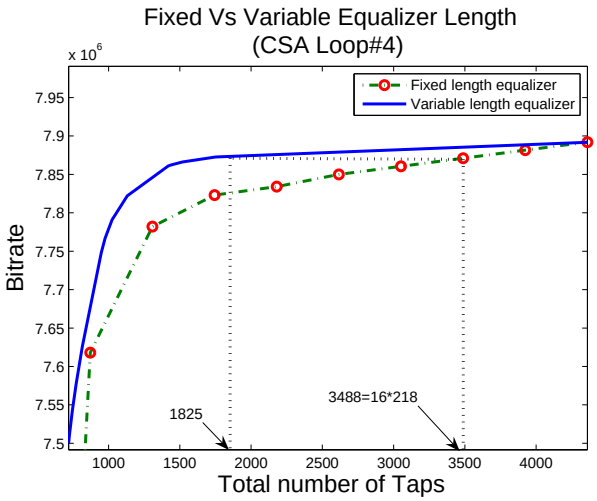

Fig. 4. Comparison between the total number of equalizer taps needed to achieve the same bit rate performance for fixed length and optimized length equalizers in CSA loop 4 (for the fixed length equalizer, the total number of taps is 218*number of taps per tone)

TABLE I

TOTAL NUMBER OF EQUALIZER TAPS REQUIRED TO ACHIEVE SAME BIT RATE PERFORMANCE

	Fixed length(16 taps)	Min MSE [5]	DPF
CSA#1	3488	1731	1318
CSA#4	3488	2577	1825

V. CONCLUSION

In this paper, a per-tone equalizer length optimization method using a dual problem formulation has been presented. The proposed method calculates the optimal lengths of the per-tone equalizers such that a global resource constraint is satisfied and provides the globally optimal solution. Simulation results show that the total number of equalizer taps can be significantly reduced (by upto 60%) if the length of the equalizers is optimized, without sacrificing performance.

REFERENCES

[1] J.M. Cioffi, P. Silverman, and T. Starr, "*Understanding digital subscriber line technology* ", Prentice Hall, 1st edition, 1999

[2] J.A.C. Bingham, "*Multicarrier modulation for data transmission: An idea whose time has come*", IEEE Communication Magazine, vol. 28, pp. 5-14, May 1990

[3] N. Al-Dahir and J. M. Cioffi, "*Optimum finite-length equalization for multicarrier transceivers*", IEEE Trans. Commun., vol. 44, pp. 56-64, Jan. 1996

[4] K. Van Acker, G. Leus, M. Moonen, O. Van de Wiel and T. Pollet,"*Per tone equalization for DMT-based systems*", IEEE Transaction on Communication, vol. 49, pp. 109-119, January 2001

[5] A. M. Wyglinski, P. Kabal and F. Labeau,"*Variable-length subcarrier equalizers for multicarrier systems*", in Proc. IEEE Vehicular Technology Conference, September 2004

[6] R. Cendrillon, M. Moonen, J. Verlinden, T. Bostoen and W. Yu, "*Optimal multi-user spectrum management for Digital Subscriber Lines*", in IEEE ICC, vol. 1, June 2004, pp. 1-5

[7] P. Tsiaflakis, J. Vangorp, M. Moonen, J. Verlinden and K. Van Acker,"*An efficient search algorithm for the lagrange multipliers of optimal spectrum balancing in multi-user xDSL systems*", in Proc. International Conference on Acoustics, Speech and Signal Processing, pp. 101-104, May 2006

[8] "*Network and customer installation interfaces-ADSL metallic interface*", Tech. Report T1E1.4/98-043RS, ANSI, Plano, Texas, Nov. 1998

[9] W. Yu and R. Lui,"*Dual methods for nonconvex spectrum optimization of multicarrier systems*", IEEE Trans. Commun., vol. 54, pp. 1310-1322, July 2006