A BLIND RECEIVER FOR BLOCK TRANSMISSION IN A MULTI-USER MIMO CONTEXT WITH MULTIPATH*

O. Rousseaux, G. Leus†, M. Moonen

Katholieke Universiteit Leuven, ESAT-SISTA,
Kasteelpaark Arenberg 10, B-3001 Heverlee
(olivier.rousseaux, geert.leus, marc.moonen)@esat.kuleuven.ac.be

ABSTRACT

A deterministic blind equalizer for Multi-User Multiple Inout Multiple Output systemas (Multi-User MIMO systems, i.e. multi-user systems where both the base station and the users have multiple antennas) with space-only coding that performs direct symbol estimation was recently proposed by Leus et al. The proposed algorithm was initially designed to cope with flat-fading transmission channels and was then extended to the case where multi-path effects arise, at the cost of a severe increase in computational complexity. In this paper, we propose an extension of the initial algorithm in a wideband context with severe multipath effects, maintaining the computational complexity at reasonable levels by the use of DMT (Discrete Multi Tone, also called OFDM, Orthogonal Frequency Division Modulation) and related block transmission techniques that use a cyclic prefix. The results show that the proposed blind equalization method performs efficient noise reduction and MUI (Multi-User Interference) and ISI (Inter-Symbol Interference) cancelation whilst the computational complexity is reduced.

1. INTRODUCTION

Signal processing for Multi-User MIMO communication (i.e. multi-user systems where both the base station and the users have multiple antennas) over wireless channels has attracted much attention in the last years. Several approaches were proposed in order to estimate the transmitted data at the receiver. All these methods fall under two categories: blind or training based methods. The amount of training required by the training-based methods increases as the number of users and antennas grows, wasting a considerable part of the available bandwidth. This motivates our choice for a blind method. Within the blind methods there are two categories: stochastic and deterministic [1]. Several approaches are possible: one approach is blind channel estimation followed by the computation of an equalizer using the obtained channel estimates; other methods directly estimate the equalizer or data symbols in a blind fashion. The method we are presenting here is a blind deterministic direct symbol estimation method. We rely on a subspace-based algorithm using space-only coding that was designed to take care of noise reduction and MUI (Multi User Interference) cancelation in a flat-fading environment. This algorithm was extended to the case where multi-path effects arise, at the cost of a severe increase in computational complexity [2].

† GEERT LEUS IS A POSTDOCTORAL FELLOW OF THE F.W.O.

* THIS RESEARCH WORK WAS CARRIED OUT AT THE ESAT LABORATORY OF THE K.U.LEUVEN, IN THE FRAME OF THE BELGIAN STATE INTERUNIVERSITY POLES OF ATTRACTION PROGRAMME - IUAP P4-02 (1997-2001): MODELING, IDENTIFICATION, SIMULATION AND CONTROL OF COMPLEX SYSTEMS, THE CONCERTED RESEARCH ACTION GOA-MEFISTO-666 OF THE FLEMISH GOVERNMENT, RESEARCH PROJECT FWO NR. G.0196.02 AND WAS PARTIALLY SPONSORED BY IMEC.

In this paper, we propose an extension of the initial algorithm in a wideband context with severe multipath effects, maintaining the computational complexity at reasonable levels by the use of DMT and related block transmission techniques with a cyclic prefix that cope with ISI (Inter Symbol Interference) in a cheap and efficient way.

2. BLIND DMT TRANSCEIVER

We propose in this section to combine the blind code modulation transceiver presented in [2] with DMT transmission techniques that allow to deal with multipath effects in an efficient and cheap way.

2.1. Data Model

We consider a system with N users, each of which has T transmit antennas. The receiver has R receive antennas, with the condition $R \geqslant N\ T$. We consider FIR (Finite Impulse Response) channels of order L. $g_{n,t,r}[l]$, $l = 0 \dots L$ is the lth tap of the channel impulse response from the tth antenna of the nth user to the rth receive antenna of the base station.
Each user has to transmit a finite length sequence of data symbols. $s_n[k]$ is the transmitted sequence of data symbols for user n, $k = 1 \dots P\mathcal{V}$. The transmitted sequence is organised in blocks of data that are processed independently by the transmitter. $\mathbf{s}_n[\nu]$ is the νth P-wide block of input symbols, $\nu = 1 \dots \mathcal{V}$:

$$\mathbf{s}_n[\nu] = [s_n[(\nu-1)P+1] \dots s_n[\nu P]\,]^T \tag{1}$$

Each user transmits a burst of $\mathcal{V}$ blocks. We assume that the channels remain constant during the transmission of an entire burst.
A P-point IFFT (Inverse Fast Fourier Transform) is computed on each of these blocks and a cyclic prefix of length μ is added:

$$\mathbf{x}_n[\nu] = \mathbf{P}_\mu\, \boldsymbol{\mathcal{I}}_P \mathbf{s}_n[\nu] \tag{2}$$

where $\boldsymbol{\mathcal{I}}_P$ is the P-point normalized IFFT matrix and $\mathbf{P}_\mu$ adds a cyclic prefix of length μ.
Each transmit antenna has its specific code sequence that will be used to modulate the data. An entire block of data symbols $\mathbf{x}_n[\nu]$ is multiplied by the same antenna-specific code symbol. $c_{n,t}[\nu]$ is the code symbol for user n antenna t, data block ν. $\mathbf{c}_{n,t}$ is the $1 \times \mathcal{V}$ vector built with this code sequence. The code symbols are random constant modulus complex numbers. Each antenna will transmit its own sequence of code-modulated symbol blocks:

$$\mathbf{x}_{n,t}[\nu] = c_{n,t}[\nu]\mathbf{x}_n[\nu] \tag{3}$$

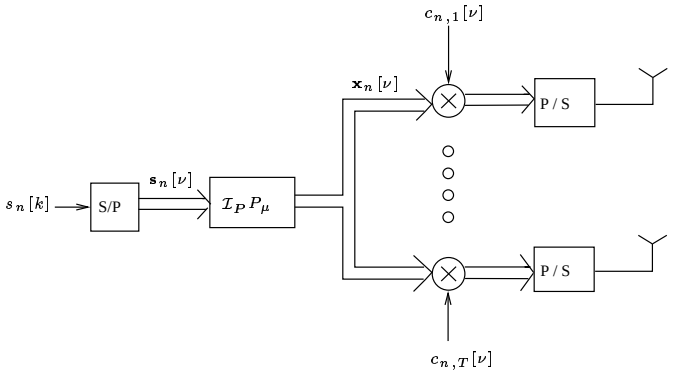

Figure 1: Transmitter scheme, user n

This transmitter scheme is depicted for user n in Figure 1. The different symbol sequences of all users are assumed to be transmitted simultaneously over the channels.
The received sequences are organised in blocks, discarding the cyclic prefix:

$$\mathbf{y}_r[\nu] = [y_r[\nu P + \mu + 1] \dots y_r[(\nu+1)P + \mu]\,]^T \qquad (4)$$

is the νth received block on antenna r An FFT (Fast Fourier Transform) is then computed on these received blocks:

$$\mathbf{r}_r[\nu] = \boldsymbol{\mathcal{F}}_P \mathbf{y}_r[\nu] \qquad (5)$$

where $\boldsymbol{\mathcal{F}}_P$ is the P-point normalized FFT matrix.
Assuming that the cyclic prefix is longer than or equal to the channel order ($\mu \geqslant L$), the transmission scheme can be modelled using a circulant channel matrix. It is a well known result that this channel matrix is diagonalised using IFFT$-$FFT operations and that the ISI is totally cancelled using these operations ([3] and [4, pp 30-31]). We directly rely on this property to express our transmission scheme.
The frequency-domain equivalent of the transmission channels, $\mathbf{g}^{eq}_{n,t,r}$, is the P point FFT of the channel impulse response $\mathbf{g}_{n,t,r}$:

$$\mathbf{g}^{eq}_{n,t,r} = \boldsymbol{\mathcal{F}}_P \mathbf{g}_{n,t,r} \qquad (6)$$

The transmission scheme can directly be expressed as

$$\mathbf{r}_r[\nu] = \sum_{t=1}^{T} \sum_{n=1}^{N} c_{n,t}[\nu] \mathbf{G}^{eq}_{n,t,r} \mathbf{s}_n[\nu] + n_r[\nu] \qquad (7)$$

where $n_r[\nu]$ is the AWGN (Additive White Gaussian Noise)vector and $\mathbf{G}^{eq}_{n,t,r} = diag(\mathbf{g}^{eq}_{n,t,r})$ ($diag$ transforms a vector into a diagonal matrix with the elements of the vector on the diagonal).

2.2. Frequency Domain Interpretation

This transmission scheme can be seen as the parallel transmission of independent symbols on orthogonal carriers (equivalently called tones), the orthogonality between different carriers being maintained by the presence of a long enough cyclic prefix. This allows us to rephrase the problem on a per tone approach. The νth symbol transmitted on tone p by user n, $s^{(p)}_n[\nu]$ is the pth element of $\mathbf{s}_n[\nu]$, hence the transmitted sequence on tone p, $\mathbf{s}^{(p)}_n$ can be defined as

$$\mathbf{s}^{(p)}_n = [s_n(p)\ s_n(P+p) \dots s_n((\mathcal{V}-1)P+p)] \qquad (8)$$

One can also look at the per tone sequences of the different antennas. If the coding matrix $\mathbf{C}_{n,t}$ is defined as a $\mathcal{V} \times \mathcal{V}$ diagonal matrix with the antenna-specific code symbols on the diagonal

$$\mathbf{C}_{n,t} = diag(\mathbf{c}_{n,t}) \qquad (9)$$

then the symbol sequence transmitted by antenna t of user n on tone p is

$$\mathbf{s}^{(p)}_{n,t} = \mathbf{s}^{(p)}_n\ \mathbf{C}_{n,t} \qquad (10)$$

The received blocks can be rearranged in P matrices $\mathbf{R}^{(p)}$ of size $R \times \mathcal{V}$, one for each tone:

$$\mathbf{R}^{(p)} = \begin{bmatrix} r^{(p)}_1[1] & \dots & r^{(p)}_1[\mathcal{V}] \\ \vdots & \ddots & \vdots \\ r^{(p)}_R[1] & \dots & r^{(p)}_R[\mathcal{V}] \end{bmatrix} \qquad (11)$$

The effect of the channel on a symbol sequence transmitted on tone p is a complex multiplication by the corresponding channel coefficient for that tone. The matrix of received symbols $\mathbf{R}^{(p)}$ is thus an instantaneous mixture of the symbols transmitted on tone p.
Define the $R \times NT$ channel matrix for tone p:

$$\mathbf{G}^{(p)} = \begin{bmatrix} g^{(p)}_{1,1,1} & \dots & g^{(p)}_{1,T,1} & g^{(p)}_{2,1,1} & \dots & g^{(p)}_{N,T,1} \\ g^{(p)}_{1,1,2} & & \dots & & & g^{(p)}_{N,T,2} \\ \vdots & & \ddots & & & \vdots \\ g^{(p)}_{1,1,R} & & \dots & & & g^{(p)}_{N,T,R} \end{bmatrix} \qquad (12)$$

where $g^{(p)}_{n,t,r} = \mathbf{g}^{eq}_{n,t,r}[p]$. Let $\mathbf{S}^{(p)}$ be the matrix of symbols transmitted on tone p:

$$S^{(p)} = \begin{bmatrix} \mathbf{s}^{(p)T}_{1,1} & \dots & \mathbf{s}^{(p)T}_{1,T} & \dots & \mathbf{s}^{(p)T}_{N,T} \end{bmatrix}^T \qquad (13)$$

We can write:

$$\mathbf{R}^{(p)} = \mathbf{G}^{(p)} \mathbf{S}^{(p)} + \mathbf{N}^{(p)} \qquad (14)$$

where $\mathbf{N}^{(p)}$ is the AWGN matrix. The collection of P equations similar to (14) on the P different tones describes the transmission of a whole data burst.

2.3. Detection Algorithm

The algorithm used for the symbol detection is inspired by the one that was first proposed in [2]. The detection scheme is presented in Figure 2. The algorithm aims at recovering the transmitted data symbols knowing only the received symbols and the antenna-specific codes provided that $R \geqslant NT$.
Assuming that $\mathbf{G}^{(p)}$ has full column rank and $\mathbf{S}^{(p)}$ has full row rank, the SVD of the matrix $\mathbf{R}^{(p)}$ is

$$\mathbf{R}^{(p)} = \begin{bmatrix} \mathbf{U}^{(p)} & \tilde{\mathbf{U}}^{(p)} \end{bmatrix} \begin{bmatrix} \boldsymbol{\Sigma}^{(p)} & 0 \\ 0 & 0 \end{bmatrix} \begin{bmatrix} \mathbf{V}^{(p)H} \\ \tilde{\mathbf{V}}^{(p)H} \end{bmatrix} \qquad (15)$$

where $\boldsymbol{\Sigma}^{(p)}$ is the $NT \times NT$ matrix of singular values associated to the NT transmitted signals.

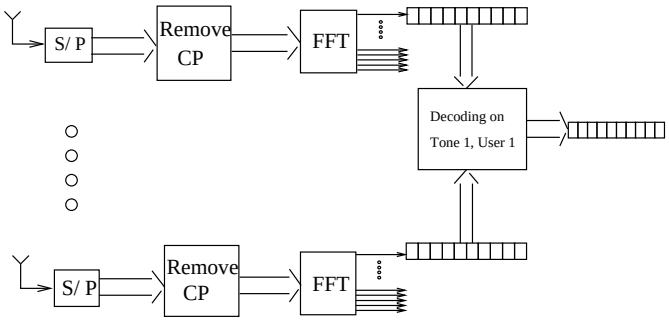

Figure 2: Detection scheme at the receiver

In the noiseless case, the row space of $\mathbf{R}^{(p)}$ and $\mathbf{S}^{(p)}$ are the same, and $\mathbf{S}^{(p)}$ is thus orthogonal to $\tilde{\mathbf{V}}^{(p)}$:

$$\mathbf{R}^{(p)}\tilde{\mathbf{V}}^{(p)} = \mathbf{G}^{(p)}\mathbf{S}^{(p)}\tilde{\mathbf{V}}^{(p)} = 0. \tag{16}$$

We can thus write

$$\mathbf{s}_{n,t}^{(p)}\tilde{\mathbf{V}}^{(p)} = \mathbf{s}_{n}^{(p)}\mathbf{C}_{n,t}\tilde{\mathbf{V}}^{(p)} = 0, \quad t = 1 \dots T \tag{17}$$

If we define the user-specific matrix

$$\mathbf{W}_{n}^{(p)} = \left[\mathbf{C}_{n,1}\tilde{\mathbf{V}}^{(p)} \dots \mathbf{C}_{n,T}\tilde{\mathbf{V}}^{(p)}\right] \tag{18}$$

the set of conditions now reads

$$\mathbf{s}_{n}^{(p)}.\mathbf{W}_{n}^{(p)} = 0 \tag{19}$$

The one-dimensional left null space of $\mathbf{W}_{n}^{(p)}$ determines the solution up to a complex scaling factor. Note that a necessary condition to ensure the uniqueness of this solution is $numcols(\mathbf{W}) \geqslant 1 + numrows(\mathbf{W})$ (if this was not respected, the left-null space would have at least dimension 2). This condition is respected by the use of more than one antenna per user. Under these conditions, the uniqueness of the solution is ensured by the fact that data and code symbols are chosen randomly [2].
In the noisy case, the problem is solved by minimizing the norm of the left term of equation (19) under some non-triviality constraints on $\mathbf{s}_{n}^{(p)}$.

2.4. Simulation Results

In this section, we analyze the efficiency of the system when several users are using the channel at the same moment. It should be noted that in the absence of noise, the algorithm achieves perfect user separation and the number of users has no impact on the performance after decoding. The experimental setup is as follows. Every user has two transmit antennas and there are eight antennas at the base station, all users have equal transmit power and no near-far effect is considered (i.e., equal power is received from all the different users). Channel order and prefix length are both set to 3. The burst length $\mathcal{V}$ is set to 100 for these experiments. Fig 3 shows the SINR after decoding in dB as a function of the SNR, also in dB. Each of the lines describes the situation for a given number of users. Every time one user is added, there is a degradation of approximately 4 dB in the SINR after decoding.The resulting BERs (Bit Error Rates) for BPSK (Binary Phase Shift Keying) transmission are shown in Figure 5

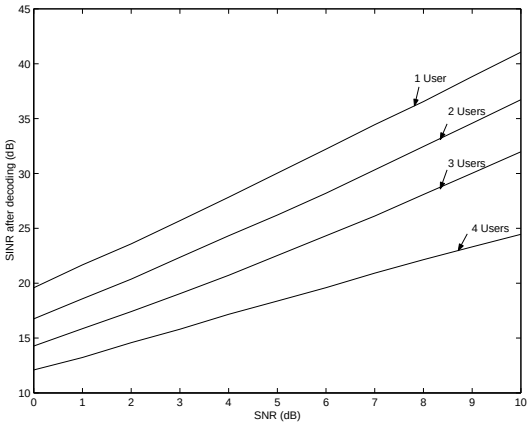

Figure 3: SINR after decoding vs SNR for Different numbers of users

3. CP ONLY TRANSCEIVER

DMT modulation is traditionally used to cope with ISI in a cheap and efficient way. Moreover, when the channel is known to the transmitter, carrier loading techniques allow to approach the true channel capacity [5], [3, p 7]. An important drawback of DMT is the occurrence of large peaks in the transmitted signal, known as the Peak to Average Power Ratio (PAPR) problem [6]. In this section, we apply a technique known as Cyclic Prefix Only (CP-Only) modulation [7, pp 103-104], [4, p 36]. This modulation solves the PAPR problem whilst keeping the advantage of an efficient and cheap ISI mitigstion. CP-Only does not allow carrier loading, which is not a drawback in our blind detection context where the transmitter has no knowledge of the channel.

3.1. Data Model and Detection Algorithm

The transmitter structure that we use here is pretty similar to the one presented in section 2.1. The blocking and the coding remain the same, the only difference is that no IFFT is computed on the transmitted blocks but we still add a cyclic prefix, i.e. equation (2) is replaced by

$$\mathbf{x}_n[\nu] = \mathbf{P}_\mu \mathbf{s}_n[\nu] \tag{20}$$

This transmission scheme is equivalent to the transmission of a "virtual block" $\mathbf{v}_n[\nu]$ in the classical DMT scheme, if the virtual block is defined as

$$\mathbf{v}_n[\nu] = \boldsymbol{\mathcal{F}}_P \mathbf{s}_n[\nu] \tag{21}$$

Replacing $\mathbf{s}_n[\nu]$ by $\mathbf{v}_n[\nu]$ in (2) yields

$$\mathbf{x}_n[\nu] = \mathbf{P}_\mu \boldsymbol{\mathcal{I}}_P \mathbf{v}_n[\nu] = \mathbf{P}_\mu \boldsymbol{\mathcal{I}}_P \boldsymbol{\mathcal{F}}_P \mathbf{s}_n[\nu] \tag{22}$$

which is equivalent to (20). The reception scheme and detection algorithm remain unchanged in this CP-Only context and the per tone sequences of virtual symbols $\hat{\mathbf{v}}_n^{(p)}$ are estimated up to a tone-specific scaling factor $\alpha_n^{(p)}$. Assuming that these complex scaling factors are known[1], the initial virtual blocks are recovered:

$$\mathbf{v}_n[\nu] = \boldsymbol{\mathcal{A}}_n \hat{\mathbf{v}}_n^{(p)} \tag{23}$$

[1]This problem is equivalent to the estimation of a frequency selective SISO channel, which can be done blindly using finite alphabet properties of the transmitted signals employing methods similar to the ones presented in [8]

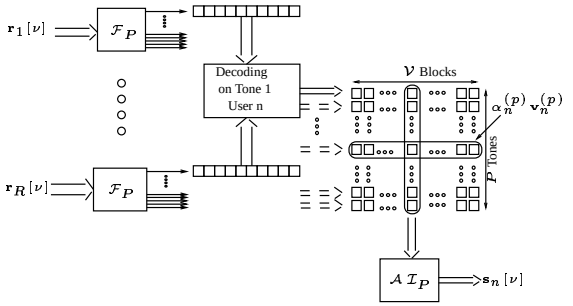

Figure 4: CP Only Receiver

up to the estimation errors of the detection algorithm $\boldsymbol{\mathcal{A}}_n = diag(\boldsymbol{\alpha}_n)$ and $\boldsymbol{\alpha}_n = [\alpha_n^{(1)} \dots \alpha_n^{(P)}]$.

Using definition (21) we recover the data symbol blocks by means of an IFFT:

$$\mathbf{s}_n[\nu] = \boldsymbol{\mathcal{I}}_P \mathbf{v}_n[\nu] \tag{24}$$

The reception scheme is illustrated in Figure 4.

3.2. Experimental Results

In order to compare the CP Only method with the previous one, we repeated the Multi User Interference experiment of previous section. The SINR after decoding is exactly the same with the new method, we thus refer to Figure 3. The bit error rate results, which are obtained with BPSK symbols, are presented in Figure 5. Even though SINR results are similar for the two methods, there is a dramatic improvement of the ber figures when CP Only is used. The reason for this is that the channels are frequency-selective; some tones are thus weaker than others. A weak tone will have large impact on a single symbol in the DMT context whereas the effect of this weak tone will be spread on all symbols in the CP-Only case. The impact of the weak tone on the global SINR is the same though, this is why SINR figures are similar while BER figures differ significantly.

4. CONCLUSIONS

We proposed in this paper a blind symbol detection method in a multi-user MIMO context. The achieved performance compares to methods that require full channel knowledge. We could significantly reduce the computational complexity compared to the original blind algorithm in a multipath context [2] by using DMT related transmission techniques. Using CP-Only transmission rather than the traditional DMT transmission yields a spectacular improvement of the performance in this blind context. The drawbacks of this method though are the use of a cyclic prefix that uses part of the available bandwidth and the computational complexity that remains quite high. It should be noted that this method is an implicit SDMA (Space Division Multiople Access) that can be used in combination with traditional multiple access methods such as FDMA (Frequency Division Multiple Access), TDMA (Time Div. MA), CDMA (Code Div. MA) or OFDMA (Orthogonal Freq. Div. MA), in which case, the total number of users allowed on the system is multiplied by N.

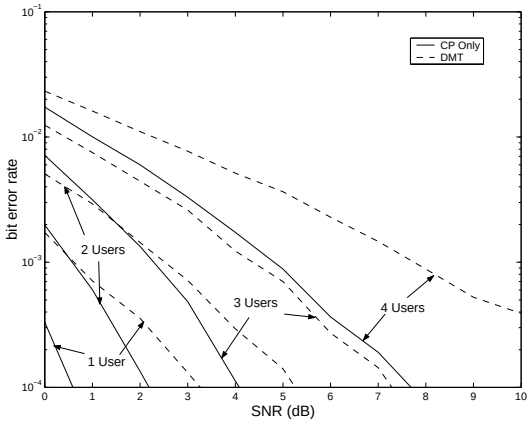

Figure 5: BER in function of the SNR (dB) for CP Only (continuous line) and DMT (Dashed) for different numbers of users

5. REFERENCES

[1] H. Liu, G. Xu, L. Tong and T. Kailath, "Recent Developments in Blind Channel Equalization: From Cyclostationarity to Subspaces," *Signal Processing*, vol. 50, pp. 83–99, 1996.

[2] G. Leus, P. Vandaele and M. Moonen, "Deterministic Blind Modulation-Induced Source Separation for Digital Wireless Communications," *IEEE Transactions on Signal Processing*, vol. 49, no. 1, pp. 219–227, Jan. 2001.

[3] J.A.C. Bingham, "Multicarrier Modulation for Data Transmission: An Idea whose Time has Come," *IEEE Communications Magazine*, pp. 5–14, May 1990.

[4] Z. Wang and G.B. Giannakis, "Wireless Multicarrier Communications: Where Fourier meets Shannon," *IEEE Signal Processing Magazine*, pp. 29–48, May 2000.

[5] R.F.H. Fischer and J.B. Huber, "A New Loading Algorithm for Discrete Multitone Transmission," in *Proc. of Globecom*, London, England, Nov. 1996, pp. 724–728.

[6] V. Tarokh and H. Jafarkhani, "On the Computation and Reduction of the Peak-to-Average Power Ration in Multicarrier Communications," *IEEE Transactions on Communications*, vol. 48, no. 1, pp. 37–44, Jan. 2000.

[7] H. Sari, G. Karam and I. Jeanclaude, "Transmission Techniques for Digital Terrestrial TV Broadcasting," *IEEE Communicatons Magazine*, pp. 100–109, Feb. 1995.

[8] O. Rousseaux, G. Leus, M. Moonen, "An Iterative Procedure for Semi-Blind Symbol Estimation in a Multipath SISO Channel Context Exploiting Finite Alphabet Properties," in *Proc. of the International Zurich Seminar on Broadband Communications (IZS 2002)*, Zurich, Switzerland, Feb. 2002, pp. 21.1–21.5.